Rolls-Royce®

Trent 1000 (Boeing 787 - Dreamliner)

Line and Base Maintenance

CONTENTS

Book Issue - 12 - Consisting of:

SECTION 1	Introduction	Issue 8
SECTION 2	Nacelle	Issue 9
SECTION 3	Propulsion System	Issue 8
SECTION 4	Engine Mechanical Arrangement	Issue 10
SECTION 5	Electronic Engine Control System (EECS)	Issue 10
SECTION 6	Engine Indicating	Issue 9
SECTION 7	Oil System	Issue 9
SECTION 8	Fuel System and Control	Issue 10
SECTION 9	Airflow Control System	Issue 7
SECTION 10	Secondary Air System	Issue 9
SECTION 11	Ventilation and Fire Protection	Issue 8
SECTION 12	Ice Protection System	Issue 8
SECTION 13	Starting and Ignition	Issue 9
SECTION 14	Basic Troubleshooting	Issue 8

This page left intentionally blank.

PREFACE

©Rolls-Royce plc 2018. Rolls-Royce plc. Use or disclosure is subject to the legend on the Notice to Holder Page

Notice to Holders

The information in this training material is the property of Rolls-Royce plc and may not be copied, or communicated to a third party, or used for any purpose other than that for which it is supplied without the express written consent of Rolls-Royce plc. To the extent Rolls-Royce plc has an agreement covering the control and disclosure of information with the company, organization or individual receiving this training material then this training material shall be held in confidence and controlled in accordance with such agreement's terms.

A portion of the information in this training material is the property of Boeing and has been included with their permission. It may not be copied, or communicated to a third party, or used for any purpose other than that for which it is supplied without the express written consent of Boeing. In this regard, the Boeing training material herein is not an official publication of Boeing and must not be used for operating or maintaining the equipment described. Official Boeing Company publications and manuals must be used for those purposes.

To the extent Boeing has an agreement covering the control and disclosure of information with the company, organization or individual receiving this training material then Boeing portion of the training material must be held in confidence and controlled in accordance with such agreement's terms. Whilst this information is given in good faith based upon the latest information available to Boeing, no warranty or representation is given concerning such information, which must not be taken as establishing any contractual or other commitment binding upon Boeing or any of its subsidiary or associated companies."

This training material is not an official publication, no revision service will be provided and must not be used for operating or maintaining the equipment herein described. The official publications and manuals must be used for those purposes: they may also be used for up-dating the contents of the training material.

Positional Referencing

It is to be noted that throughout these course notes any reference to a position or unit location is referred to as being viewed from the rear, unless otherwise stated. This is presuming the student is standing at the rear of the engine and/or aircraft and looking forward.

©Rolls-Royce plc 2018. Rolls-Royce plc. Use or disclosure is subject to the legend on the Notice to Holder Page

COURSE OBJECTIVES

At the end of the course, students will be able to demonstrate:

- They can describe the Trent 1000 engine operation and configuration.
- They can define the Trent 1000 engine systems.
- Describe; identify and locate all the Trent 1000 Line Replaceable Units (LRU's).
- An ability to undertake routine Trent 1000 maintenance tasks in accordance with the Aircraft Maintenance Manual.
- They can explain the removal and installation procedures of some LRU's.
- They can define the deactivation procedures of certain LRU's.
- They can summarise the engine Ground Tests and where they may be used.
- An ability to define the troubleshooting process for the Trent 1000.

©Rolls-Royce plc 2018. Rolls-Royce plc. Use or disclosure is subject to the legend on the Notice to Holder Page

Rolls-Royce/Boeing Business Agreement

The business agreement introduces new business and technical interfaces.

RR Responsibilities

- The bare engine and associated engine systems.
- The Engine Section Stators (ESS) anti-icing system.
- The Starter Generator Cooling System.
- The technical definition of the nacelle internal aerodynamics.

Boeing Responsibilities

- Fire and Overheat detection system.
- Nose cowl anti-icing valves and controllers including pipe-work.
- Variable Frequency Starter Generator (VFSG).
- Hydraulic Pump and pipe-work.
- Engine Mounts.
- Fire Extinguishing System.
- Aircraft mounted Airborne Vibration Monitoring equipment.

Goodrich Responsibilities

- Power Door Operating System (PDOS).
- Nacelle Hold Open Rods.
- Exhaust Nozzle.
- Exhaust Plug.
- Inlet Cowl.
- Fan Cowl doors.
- Thrust Reverser Assembly.

©Rolls-Royce plc 2018. Rolls-Royce plc. Use or disclosure is subject to the legend on the Notice to Holder Page

ABBREVIATIONS

©Rolls-Royce plc 2018. Rolls-Royce plc. Use or disclosure is subject to the legend on the Notice to Holder Page

A	
abs	Absolute
AC	Alternating Current
A/C	Aircraft
ACARS	Airplane Communication Addressing and Reporting System
ACMF	Aircraft Condition Monitoring Function
A/D	Analogue to Digital
ADIRS	Air Data Inertial and Reference System
ADIRU	Air Data and Inertia Reference Unit
AFDX	Avionics Full Duplex network = Ethernet
AGB	Accessory Gearbox
Al	Alumel (Aluminium alloy in thermocouples)
AIV	Anti-Ice Valve
ALT	Altitude or Alternate
Amb	Ambient
AMM	Airplane Maintenance Manual
AOHE	Air Oil Heat Exchanger
Approx	Approximate (ly)
APU	Auxiliary Power Unit
ARINC	Aeronautical Radio Incorporated
ASG	Auto Start Generator
ATA	Air Transport Association
ATCC	Advanced Turbine Case Cooling
ATRU	Auto Transformer Rectifier Unit
AVM	Airborne Vibration Monitor
B	
BAC	Boeing Airplane Company
B787	Boeing 787
BITE	Built In Test Equipment
BV	Bleed Valve

BPH	Boeing Provided Hardware
BPCU	Bus Power Control Unit
C	
°C	Degree Celsius (Centigrade)
CACV	Cooling Air Control Valve
CAN	Common Area Network
CAS	Calibrated Air Speed
CCD	Cursor Control device
CCR	Common Core Resource cabinet
CCS	Common Core System
CDN	Common Data Network
CDU	Control Display Unit
CFB	Centrifugal Breather
CIPS	CAC Inlet Ice protection System
CLB	Climb
CMCF	Central Maintenance Computing Function
CMCS	Central Maintenance Computer System
CMS	Central Maintenance System
CMSC	Common Motor Start Controller
D	
dB	Decibel
DC	Direct Current
DCV	Directional Control Valve
DDG	Dispatch Deviation Guide
DECEL	Decelerate, Deceleration
DEP	Data Entry Plug
DLODS	Duct Leak and Overheat Detection System
DLS	Data Load System
DMU	Data Management Unit
DP	Differential Pressure

©Rolls-Royce plc 2018. Rolls-Royce plc. Use or disclosure is subject to the legend on the Notice to Holder Page

DPT	Differential Pressure Transducer
DSP	Display Select Panel
DU	Display Unit
E	
EAI	Engine Anti-Ice
ECB	Electronic Circuit Breaker
EBU	Engine Build Up
EDP	Engine Driven Pump
EDSP	EICAS Display select Panel
EDU	EICAS Display Unit
EE Bay	Electrical and Electronic Bay
EEC	Engine Electronic Controller
EECS	Electronic Engine Control System
EEPRO	Electrically Erasable Programmable Read Only
EFB	Electronic Flight Bag
EFIS	Electronic Flight Instrument System
EGT	Exhaust Gas Temperature
EGB	External Gearbox
EICAS	Engine Indicating and Crew Alerting System
EIS	Entry Into Service
EMI	Electro Magnetic Interference
EMU	Engine Monitor Unit
ENG	Engine
EPCS	Electronic Propulsion Control System
EOSC	Engine Oil Surface Cooler
EOI	Engine Operating Instructions
ESS	Engine Section Stators
ESSAIV	Engine Section Stator – Anti Ice Valve
ESN	Engine Serial Number
ETOPS	Extended Twin Operation System

EXT	External Power
F	
°F	Degree Fahrenheit
FAA	Federal Aviation Administration
FADEC	Full Authority Digital Engine Control
FBH	Front Bearing Housing
FCSB	Fan Cowl Support Beam
FDE	Flight Deck Effect
FDR	Flight Data Recorder
FDU	Fire Detection Unit
FFT	Fuel Flow Transmitter
FIM	Fault Isolation Manual
FLT	Flight
FMCS	Flight Management Computer System
FMGC	Flight Management Guidance Computer
FMV	Fuel Metering Valve
FOGV	Fan Outlet Guide Vanes
FOHE	Fuel Oil Heat Exchanger
FREQ	Frequency
FRTTV	Fuel Return To Tank Valve
FWD	Forward
G	
GBX	Gearbox
gpm	Gallons per Minute
GND	Ground
GSE	Ground Support Equipment
H	
HCU	Hydraulic Control Unit
HMU	Hydro-Mechanical Unit
HP	High Pressure

©Rolls-Royce plc 2018. Rolls-Royce plc. Use or disclosure is subject to the legend on the Notice to Holder Page

HPBV	HP Bleed Valve
HPC	High Pressure Compressor
HPSOV	High Pressure Shut-Off Valve
HPT	HP Turbine
Hz	Hertz
I	
I/O	Input / Output
IFSD	In Flight Shut Down
IGB	Intermediate Gear Box
IGN	Ignition
IGV	Inlet Guide Vane
IP	Intermediate Pressure
IPBV	IP Bleed Valve
IPC	Illustrated Parts Catalogue
IPC	Intermediate Pressure Compressor
IPT	Intermediate Pressure Turbine
IV	Isolation Valve
J	
JAA	Joint Aviation Authorities
JAR	Joint Airworthiness Requirements
JCT	Junction
K	
°K	Degree Kelvin
K	Kilo
Kg	Kilogram
KGPH	Kilograms per Hour
KT	Knot
KV	Kilo Volt
KVA	Kilo Volt Ampere

L	
L	Left
LBS	Pounds
LBS/HR	Pounds per Hour
LE	Leading Edge
LH	Left Hand
LP	Low Pressure
LPC	Low Pressure Compressor
LPT	Low Pressure Turbine
LPTCCV	LP Turbine Case Cooling Valve
LPTOS	Low Pressure Turbine Overspeed
LRU	Line Replaceable Unit
LVDT	Linear Variable Differential Transducer
M	
MAINT	Maintenance
MAX	Maximum
MAS	Modulating Air System
MCT	Maximum Continuous Thrust
MEDC	Main Engine Data Concentrator
MEL	Minimum Equipment List
MFD	Multifunction Display
MFK	Multifunction Keyboard
MHz	Megahertz
MIN	Minimum
MM	Maintenance Manual
mm	Millimetres
MMEL	Master Minimum Equipment List
MN	Mach Number
MOD	Modification
ms	Milliseconds

©Rolls-Royce plc 2018. Rolls-Royce plc. Use or disclosure is subject to the legend on the Notice to Holder Page

MTBF	Mean Time Between Failure
MTBR	Mean Time Between Removals
MTO	Maximum Take-Off
MUF	Muffler (noise reduction)
mV	Millivolts
N	
N	Rotational Speed
N/A	Not Applicable
N/C	Normally Closed
N/O	Normally Open
N1	Low Pressure System Speed
N2	Intermediate System Speed
N2dot	Rate of change of N2
N3	High Pressure System Speed
N3dot	Rate of change of N3
ND	Navigation display
NGV	Nozzle Guide Vane
N1T	LP Turbine Speed
NVM	Non Volatile Memory
O	
O/C	Open Circuit
O/S	Overspeed
O/T	Over Temperature
OAT	Outside Air Temperature
OBEDS	Onboard Boeing Electronic Distribution osf
OBV	Oil Bypass Valve
ODLF	Onboard Data Load Function
ODMS	Oil Debris Monitoring System
ODS	Oil Debris Sensor
ODSC	Oil Debris Signal Conditioner

OEBS	Onboard Engine Balancing System
OGV	Outlet Guide Vane
OMSD	Operation Maintenance Servicing and Disposal Servicing and Disposal
OPAS	Overhead Panel ARINC 629 System
OPU	Overspeed Protection Unit
OVHT	Over Heat (Turbine)
P	
P0	Ambient Pressure
P160	Fan Exit Pressure
P20	Engine Intake Pressure
P25	IP Compressor Exit Pressure
P30	HP Compressor Delivery Pressure
P50	LP Turbine Exit Pressure
Pamb	Ambient Pressure
PDF	Primary Display Function
PDOS	Power Door Opening System
PFD	Primary Flight Display
PFPS	Propulsion Fire protection System
PMA	Permanent Magnet Alternator
Poil	Oil Pressure
POSN	Position
PP	Power Plant
PPH	Pounds Per Hour
PRESS	Pressure
Prox	Proximity Sensor
Prox	Proximity Sensor (Inductive)
PRSOV	Pressure Regulating Shut-Off Valve
PRV	Pressure Regulating Valve
PS	Pressure Switch

©Rolls-Royce plc 2018. Rolls-Royce plc. Use or disclosure is subject to the legend on the Notice to Holder Page

PSI	Pounds per Square Inch
PSIA	Pounds per Square Inch Absolute
PSID	Pounds per Square Inch (Differential)
PSIG	Pounds per Square Inch Gauge
PWR	Power
Q	
QAD	Quick Attach Detach
QEC	Quick Engine Change
Qoil	Oil Quantity
QTT	Quantity Transmitter
QTY	Quantity
R	
R	Right
RAT	Ram Air Turbine
RAD ALT	Radio Altitude
RCC	Remote Charge Converter
RDC	Remote Data Concentrator
REF	Reference
REV	Reverser
RFI	Radio Frequency Interference
RPDU	Remote Power Distribution Unit
RR	Rolls-Royce plc
RTD	Resistive Temperature Device
RVDT	Rotary Variable Differential Transducer
S	
SC	Signal Conditioner
S/C	Short Circuit
S/D	Shut Down
S/G	Starter/Generator

SAGB	Step-Aside Gear Box
SASV	Secondary Air System Valve
SAT	Static Air Temperature
SB	Service Bulletin
SD	System Display
sec	Second
SER NO	Serial Number
SFC	Specific Fuel Consumption
SL	Sea Level
Sol	Solenoid
SOV	Shut-Off Valve
SPDU	Secondary Power Distribution Unit
SSPC	Solid State Power Controller
SVA	Stator Vane Angle
SW	Switch
T	
T/D	Time Delay
T/O	Take-Off
T25	IP Compressor Exit Temperature
T30	HP Compressor Exit temperature
T50	LP Turbine Exit Temperature
TAI	Thermal Anti-Ice
TAT	Total Air Temperature
TBD	To Be Determined/Decided
TBH	Tail Bearing Housing
TC	Thermocouple
TCAF	Turbine Cooling Air Front
TCAR	Turbine Cooling Air Rear
TCC	Turbine Case Cooling
TCCV	Turbine Case Cooling Valve

©Rolls-Royce plc 2018. Rolls-Royce plc. Use or disclosure is subject to the legend on the Notice to Holder Page

TCMA	Thrust Control Malfunction
TCPT	Temperature Compensated
TDC	Top Dead Centre
TE	Trailing Edge
TEMP	Temperature
TEN	Thrust Efficiency and New Technology
Tfuel	Fuel Temperature
TGT	Turbine Gas Temperature
TLA	Thrust (Throttle) Lever Angle
TOGA	Take-Off/Go Around
Toil	Oil Temperature
TOS	Turbine Overspeed
TPR	Turbofan Power Ratio
TR	Thrust Reverser
TRA	Throttle (lever) Resolver Angle
TRAS	Thrust Reverse Actuation System
TRU	Transformer Rectifier Unit
Tsg	Starter/Generator
TSN	Time Since New
TSO	Time Since Overhaul
U	
U/S	Unserviceable
V	
V	Volts
VxA	Vortex Amplifier
W	
WOW	Weight On Wheels

©Rolls-Royce plc 2018. Rolls-Royce plc. Use or disclosure is subject to the legend on the Notice to Holder Page

END OF SECTION

Section 1 – Introduction

ATA Chapter Covered: 71

©Rolls-Royce plc 2018. Rolls-Royce plc. Use or disclosure is subject to the legend on the Notice to Holder Page

Trent 1000 for the Boeing 787

Rolls Royce has developed the Trent family to meet the market demand for medium-to-large, long-range commercial aircraft.

The existing Trent family, which utilises proven advanced technology, has provided many airlines with a low-risk solution to reliable engine power, accumulating more than 35 million hours since the first of the family, the Trent 700, entered service in 1995.

The Trent 1000 is the fifth generation of the Trent family and was the launch engine for the Boeing 787. It exploits unique new technologies to deliver the best ever performance at the lowest life cycle cost with minimal environmental impact.

Maturity at Entry Into Service (EIS) is ensured by the use of high technology components developed with the benefit of Trent family experience. The unique Rolls Royce three-shaft configuration combined with a very high bypass ratio, an IP power off-take and enhanced component efficiencies contribute to significantly improved fuel consumption, at the lightest engine weight.

The Trent 1000 has been designed to provide power for the entire Boeing 787 family with the best economics and at the lowest risk.

©Rolls-Royce plc 2018. Rolls-Royce plc. Use or disclosure is subject to the legend on the Notice to Holder Page

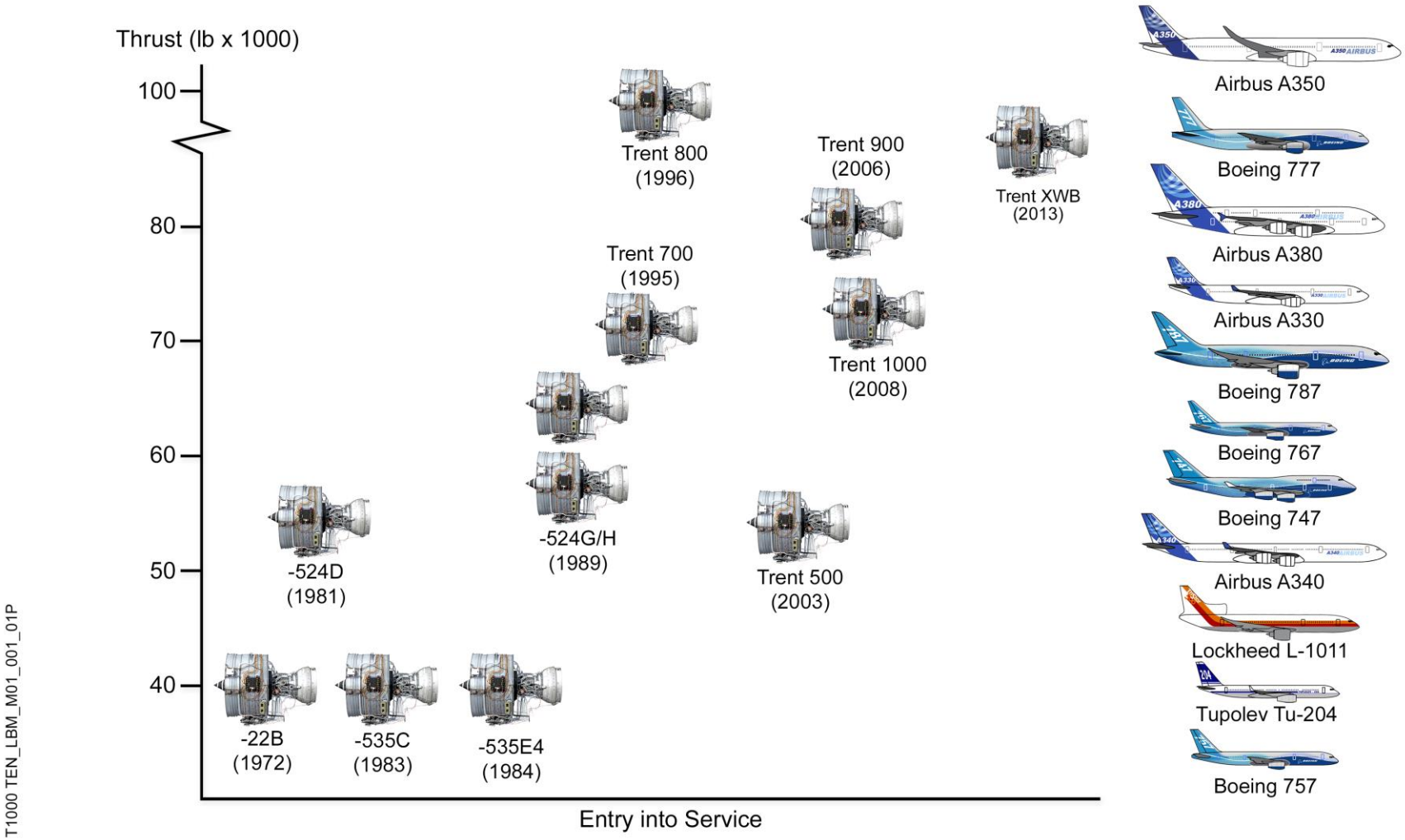

T1000 TEN_LBM_M01_001_01P

THE RB211 & TRENT FAMILY

©Rolls-Royce plc 2018. Rolls-Royce plc. Use or disclosure is subject to the legend on the Notice to Holder Page

Leading Particulars

Thrust

Take-Off Thrust (lbf Net) International Standard Atmosphere (ISA) / Sea Level Static (SLS):

Trent 1000-AE	69194
Trent 1000-CE	74511
Trent 1000-D*	74511 (ISA +20 deg C)
Trent 1000-G	72066
Trent 1000-H	63897
Trent 1000-J	78129
Trent 1000-K*	78129 (ISA +18 deg C)
Trent 1000-L*	70,300 (ISA +24 deg C)
Trent 1000-M	79,728
Trent 1000-N	79,728
Trent 1000-P*	74,511 (ISA +28.7 deg C)
Trent 1000-Q*	78,129 (ISA +20.6 deg C)
Trent 1000-R*	81,028 (ISA +10 deg C)

Note: The Flat Rating (kink point) is at ISA+15 deg C for all Engine Marks except for those shown with an asterix (*)

Max Continuous (lbf Net) ISA/SLS. All ratings are at ISA+10 deg C

Trent 1000-AE	64722
Trent 1000-CE	69523
Trent 1000-D	69523
Trent 1000-G	64722
Trent 1000-H	58866
Trent 1000-J	71818
Trent 1000-K	71818
Trent 1000-L	69,523
Trent 1000-M	72691
Trent 1000-N	72691
Trent 1000-P	69,523
Trent 1000-Q	71,818
Trent 1000-R	72,691

LP System

Single Stage Compressor (the Fan) driven by 6 stages of turbine that is seen as N1 speed on the flight deck.

IP System

8 Stage Axial Flow Compressor, driven by a single stage Turbine that is seen as N2 on the flight deck.

HP System

6 Stage Axial Flow Compressor driven by a single stage Turbine that is seen as N3 on the flight deck.

By-pass Ratio - 10:1

Overall Pressure Ratio

Between 35 and 50:1 dependant on Engine rating

Overall length - 161.5 inches.

Fan Diameter - 112 inches

Dry Weight - 13486 lbs

Direction of rotation

LP & IP Shafts - Counter-clockwise, as viewed from the rear

HP shaft – Clockwise, as viewed from the rear

Shaft rotation speeds at 100%

LP (N1)	2683 rpm
IP (N2)	8937 rpm
HP (N3)	13391rpm

©Rolls-Royce plc 2018. Rolls-Royce plc. Use or disclosure is subject to the legend on the Notice to Holder Page

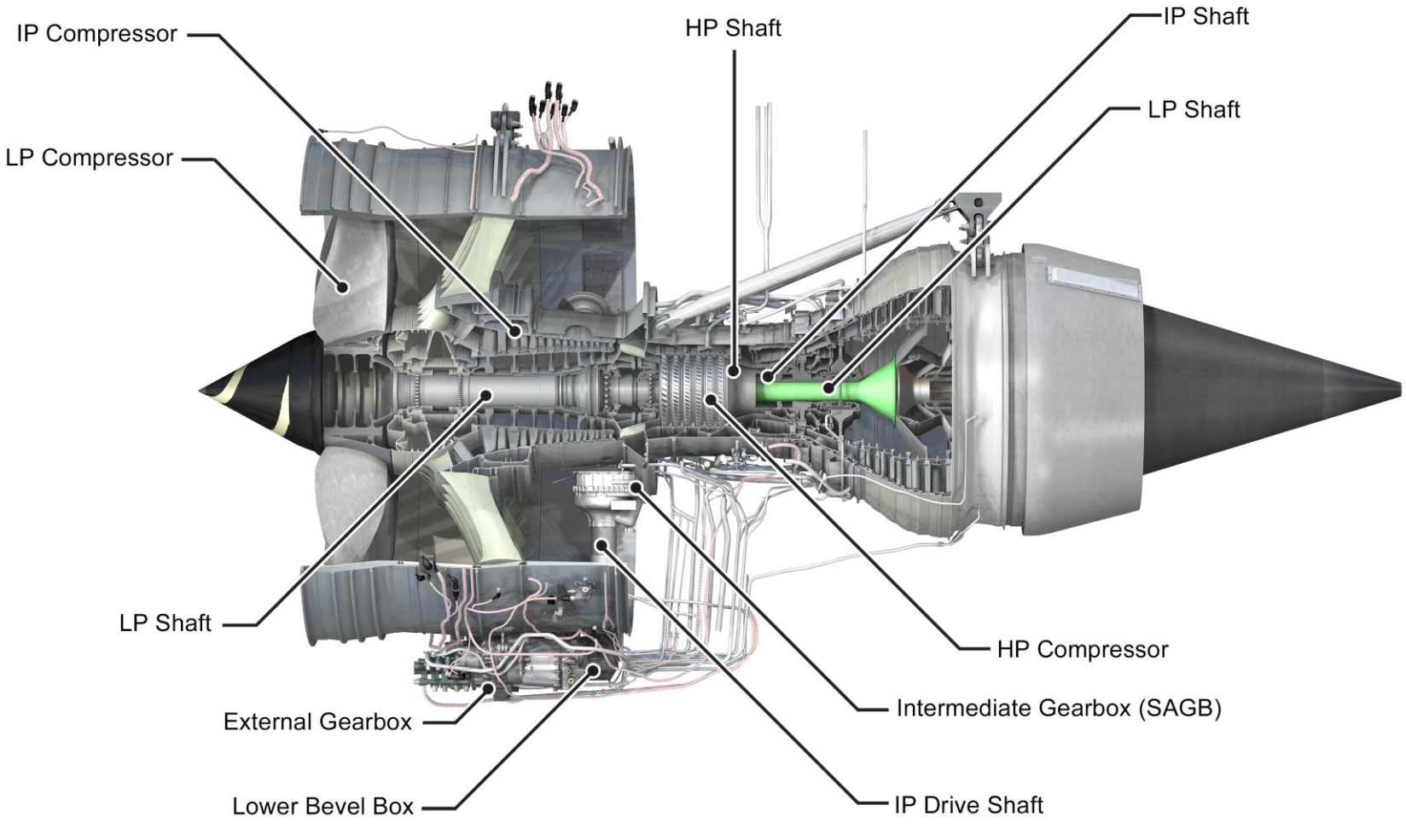

THE TRENT 1000 ENGINE

©Rolls-Royce plc 2018. Rolls-Royce plc. Use or disclosure is subject to the legend on the Notice to Holder Page

Propulsion System Outline

The Boeing 787 is powered by two propulsion systems attached to pylons on the underside of each wing.

The Rolls-Royce Trent 1000 engine is described as a 3-shaft high bypass ratio turbofan engine.

Each shaft is identified as the Low Pressure (LP) system, Intermediate Pressure (IP) system and High Pressure (HP) system.

The LP system consists of a single stage compressor assembly driven by a 6-stage turbine.

The IP system consists of an 8-stage axial flow compressor driven by a single stage turbine.

The HP system consists of a 6-stage axial flow compressor driven by a single stage turbine

Air enters the engine through the air inlet cowl and is compressed by the LP Compressor (Fan). The exiting air is then split into two main flows, bypass and core, by the splitter fairing.

The bypass flow; which has a greater mass and produces the majority of the overall thrust of the engine passes through the raked Fan Outlet Guide Vanes (OGV) into the bypass duct before exiting the cold nozzle.

The IP and HP Compressors compress the core flow further before entering the combustion chamber. Fuel is added to the compressed air and the resulting mixture is burned. The gases expand through the turbines where the energy is extracted to drive the compressors before being exhausted through the hot nozzle.

The combustion system is of annular construction incorporating 18 fuel spray nozzles through which fuel is supplied from the engine fuel system, in response to engine thrust lever setting and aircraft operating conditions.

The External Gearbox (EGB) is mounted at the bottom of the fan case. A driveshaft connected to the IP System provides drive for the following accessories:

- LP and HP Fuel Pump Assembly
- Engine Oil Pumps
- Centrifugal Breather
- Hydraulic Pump
- Permanent Magnet Alternator (PMA)
- Two Variable Frequency Starter Generators (VFSG)

There are two dual-purpose EGB-mounted VFSGs, which operate as electric motors to drive the IP system during engine starts. Two VFSG's are used to drive the IP system during ground starts and a single VFSG is used if an assisted in-flight start is required.

Once the engine has started the aircraft systems will re-configure the VFSGs to provide electrical power to the aircraft.

For ventilation and fire protection purposes the engine is divided into three compartments. These compartments are known as:

- Zone 1 – area under the fan cowl doors
- Zone 2 – area under the core fairings
- Zone 3 – area under thrust reverser

©Rolls-Royce plc 2018. Rolls-Royce plc. Use or disclosure is subject to the legend on the Notice to Holder Page

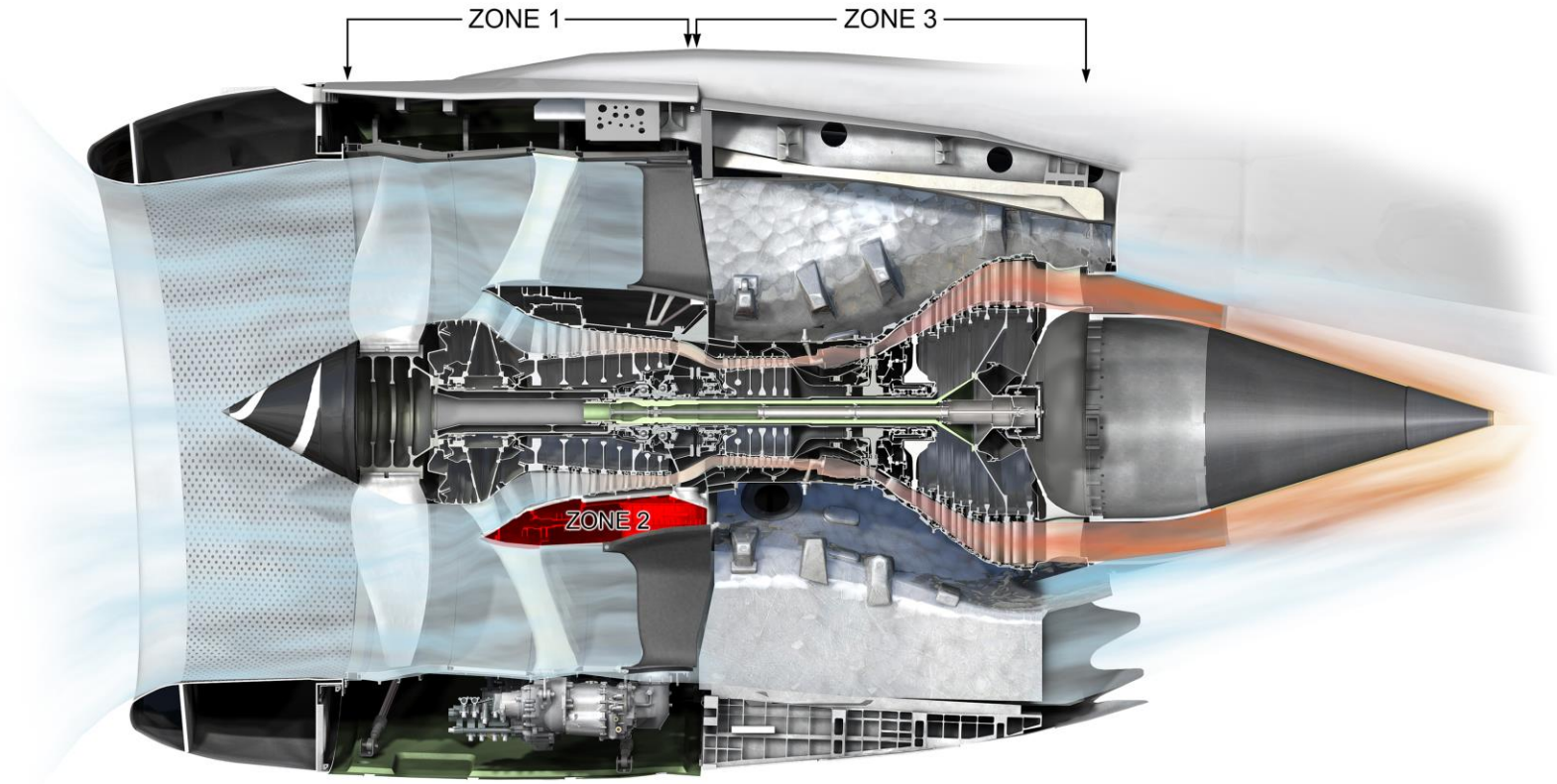

T1000-TEN_LBM_M01_003_01P

PROPULSION SYSTEM OUTLINE

©Rolls-Royce plc 2018. Rolls-Royce plc. Use or disclosure is subject to the legend on the Notice to Holder Page

Engine Danger Areas

Introduction

Operation of the engine on the ground for maintenance is often required but should be kept to a minimum whenever possible. When the engines are operating the areas around the intake and exhaust can be extremely dangerous. For this reason the instruction for Ground Operation must be fully complied with.

Description

The following pages give a brief summary of these requirements. AMM task B787-A-71-00-00-41A-950A-A should be referred to before carrying out any Engine Ground Running.

Operation

- Keep the ground operation time of the engine to a minimum.
- Increase or decrease the engine speed smoothly over a minimum 30-second period unless otherwise stated.
- Operate the engine at minimum power for the task in hand.

Before any engine running is carried out ensure the ground is clear of broken, loose and unwanted materials that may be taken into the engine and cause damage. The exhaust area is as important as the inlet area and recommended distances for engine operation must be observed, especially if a blast fence is required, as it will effect engine operation.

For correct operation all cowling should be closed and latched, however the engine can be operated with the cowls open in accordance with the relevant AMM task.

The engine danger areas are shown below. Personnel should observe these areas and ensure all tooling and ground support equipment does not enter these zones whilst the engine is operating.

In order to prevent serious injury, including the possibility of death, or damage to equipment the following warnings should be strictly adhered to.

Note: The danger areas greatly increase as power is increased from idle.

Warning:

KEEP ALL PERSONS OUT OF THE DANGEROUS AREA DURING ENGINE OPERATION. IF THE SURFACE WIND IS MORE THAN 25 KNOTS, INCREASE THE DANGEROUS AREA AT THE ENGINE INLET BY 20%.

CLEAN THE RAMP IF THERE IS SNOW, ICE, WATER, OIL OR OTHER CONTAMINATION OR MOVE THE AIRCRAFT TO A LOCATION THAT IS CLEAN.

MAKE SURE ALL PERSONS ARE SAFE BEFORE YOU START THE ENGINE.

MAKE SURE THE PERSONS IN THE FLIGHT COMPARTMENT CAN SPEAK TO ALL PERSONS NEAR THE DANGEROUS AREA DURING ENGINE OPERATION.

OBEY ALL OF THE GROUND SAFETY PRECAUTIONS FOR THE ENGINES.

THE ENGINES CAN PULL PERSONS OR UNWANTED MATERIALS INTO THEM AND CAUSE SERIOUS INJURIES OR DAMAGE TO EQUIPMENT.

©Rolls-Royce plc 2018. Rolls-Royce plc. Use or disclosure is subject to the legend on the Notice to Holder Page

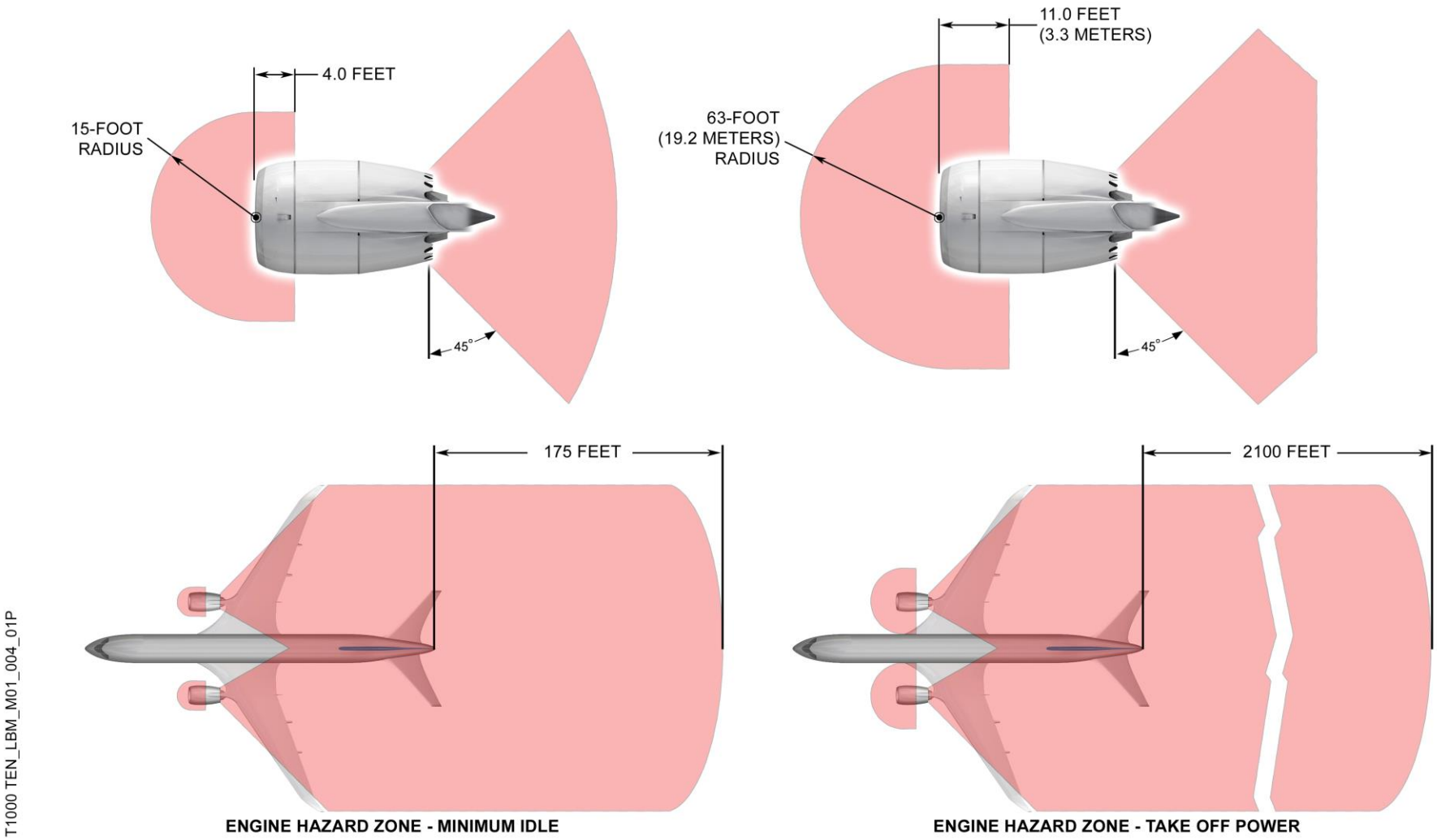

ENGINE DANGER AREAS

©Rolls-Royce plc 2018. Rolls-Royce plc. Use or disclosure is subject to the legend on the Notice to Holder Page

Relative Wind Direction During Engine Running

Introduction

For the engine to operate correctly the aircraft should be positioned as to prevent the possibility of the engine surging.

Persons operating the aircraft on the ground must ensure they obey the relative wind direction and velocity limits. Below is a brief summary of the relevant subtask. AMM Subtask B787-A-71-00-00-41A-950A-A should be referred to in its entirety before engine operation.

Operation

- Refer to the Engine Operation Limits in the AMM (Task B787-A-R71-00-00-07A-030A-A).
- Run the engine to the minimum power for the required task.
- If throttle movements are required move them slowly to prevent quick changes in engine temperature. Fast movement will ultimately decrease the life of the engine.
- Ensure the wind direction and velocity limits are observed.
- Turbulence, gusting and crosswind conditions can cause TPR, EGT and RPM indications on the EICAS screen to be not stable at middle power and above. A roar from the engine inlet may also be heard. This will require the engine power to be immediately decreased. It is therefore not permitted to run in these conditions.
- A surge during engine ground running can be identified by an increase in EGT and a sudden noise from the engine. If the surge is large enough flames may be seen forward of the engine inlet. In this case the relevant steps should be taken in accordance with the Engine Operating Manual and the AMM. The Rolls-Royce Field Service Representative should also be informed.
- If the engine is operated on the ground in conditions of low humidity static electricity may be discharged from the LP Compressor Spinner. This will not cause damage to the engine.
- Ensure engine anti-icing is used if moisture is seen in the air (fog, rain, snow, sleet or hail) or if the OAT is less than the temperature specified in the AMM.

©Rolls-Royce plc 2018. Rolls-Royce plc. Use or disclosure is subject to the legend on the Notice to Holder Page

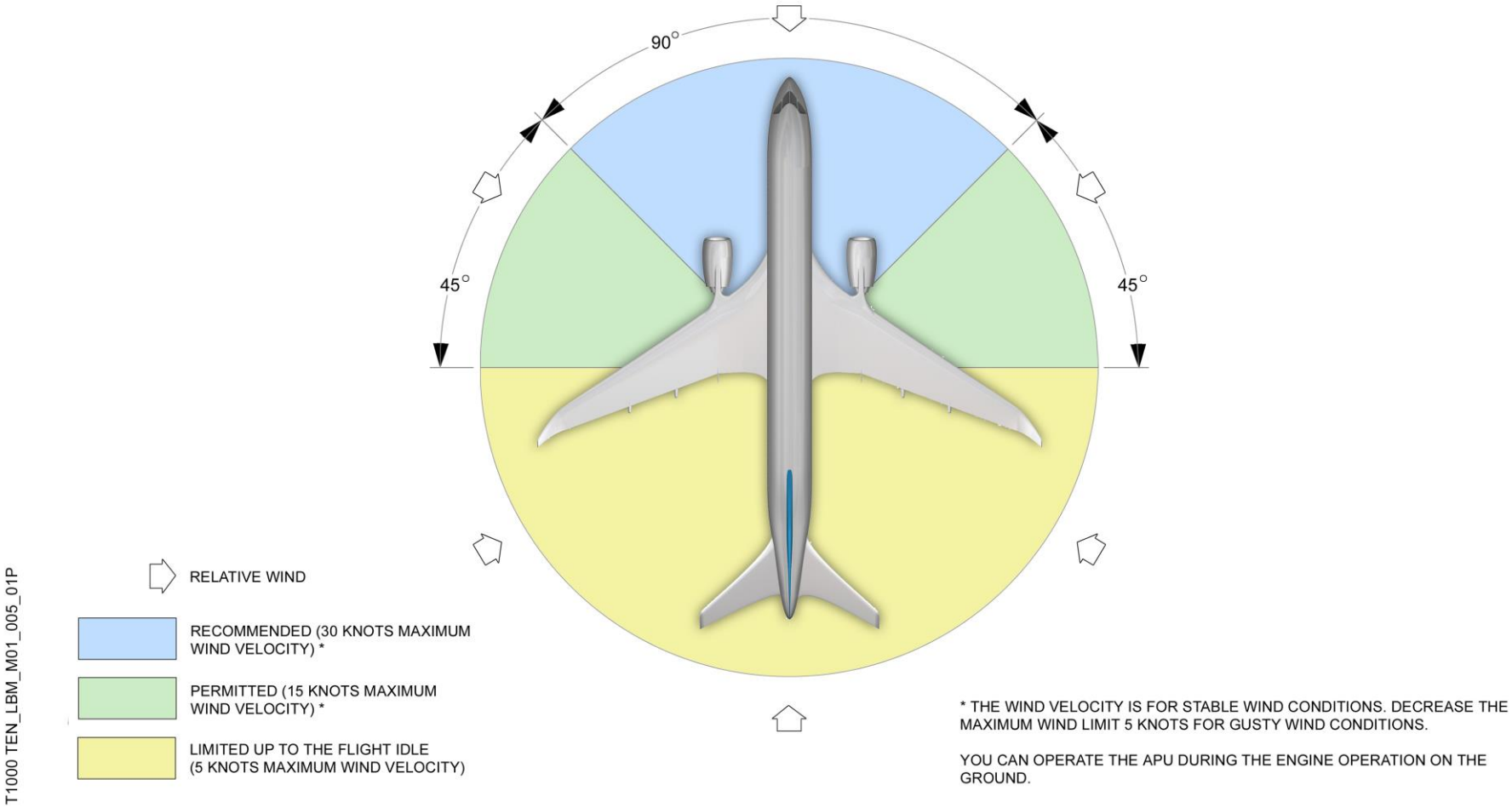

RELATIVE WIND DIRECTION FOR GROUND RUNNING

©Rolls-Royce plc 2018. Rolls-Royce plc. Use or disclosure is subject to the legend on the Notice to Holder Page

This page left intentionally blank.

©Rolls-Royce plc 2018. Rolls-Royce plc. Use or disclosure is subject to the legend on the Notice to Holder Page

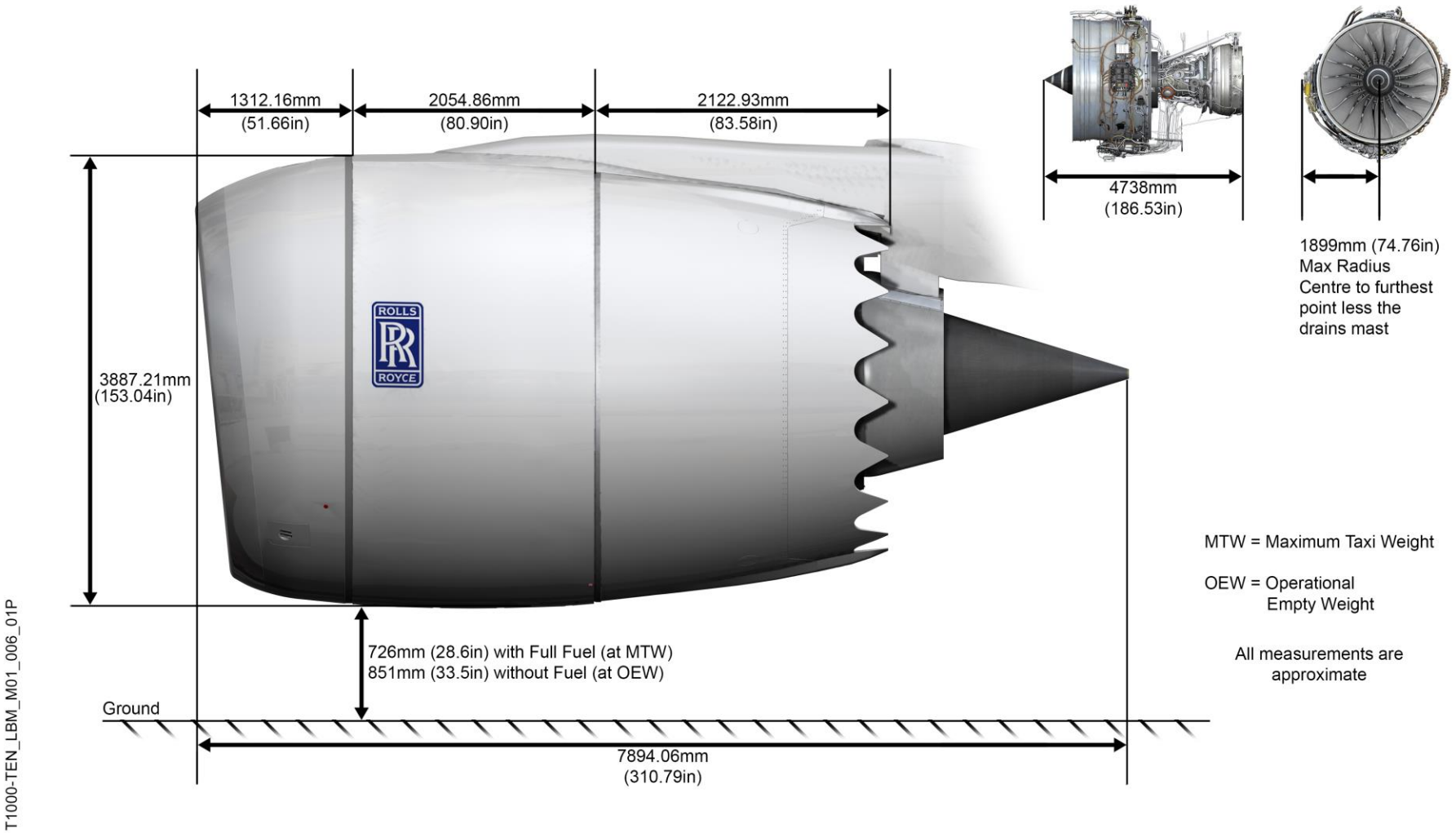

ENGINE DIMENSIONS

©Rolls-Royce plc 2018. Rolls-Royce plc. Use or disclosure is subject to the legend on the Notice to Holder Page

END OF SECTION

Section 2 - Nacelle

ATA Chapters Covered:

71 and 78

© Rolls-Royce plc 2018 Use or disclosure is subject to the legend on the Notice to Holder page

Nacelle Major Units

The nacelle comprises of the following items:

- Air intake cowl
- Left and right fan cowl doors
- Left and right thrust reverser halves (C-ducts)
- Exhaust Nozzle Assembly and Plug
- Engine including the front and rear mounts.

The above components are installed to the aircraft pylon and provide inlets and outlets for engine ventilation flows.

© **Rolls-Royce plc 2018** Use or disclosure is subject to the legend on the Notice to Holder page

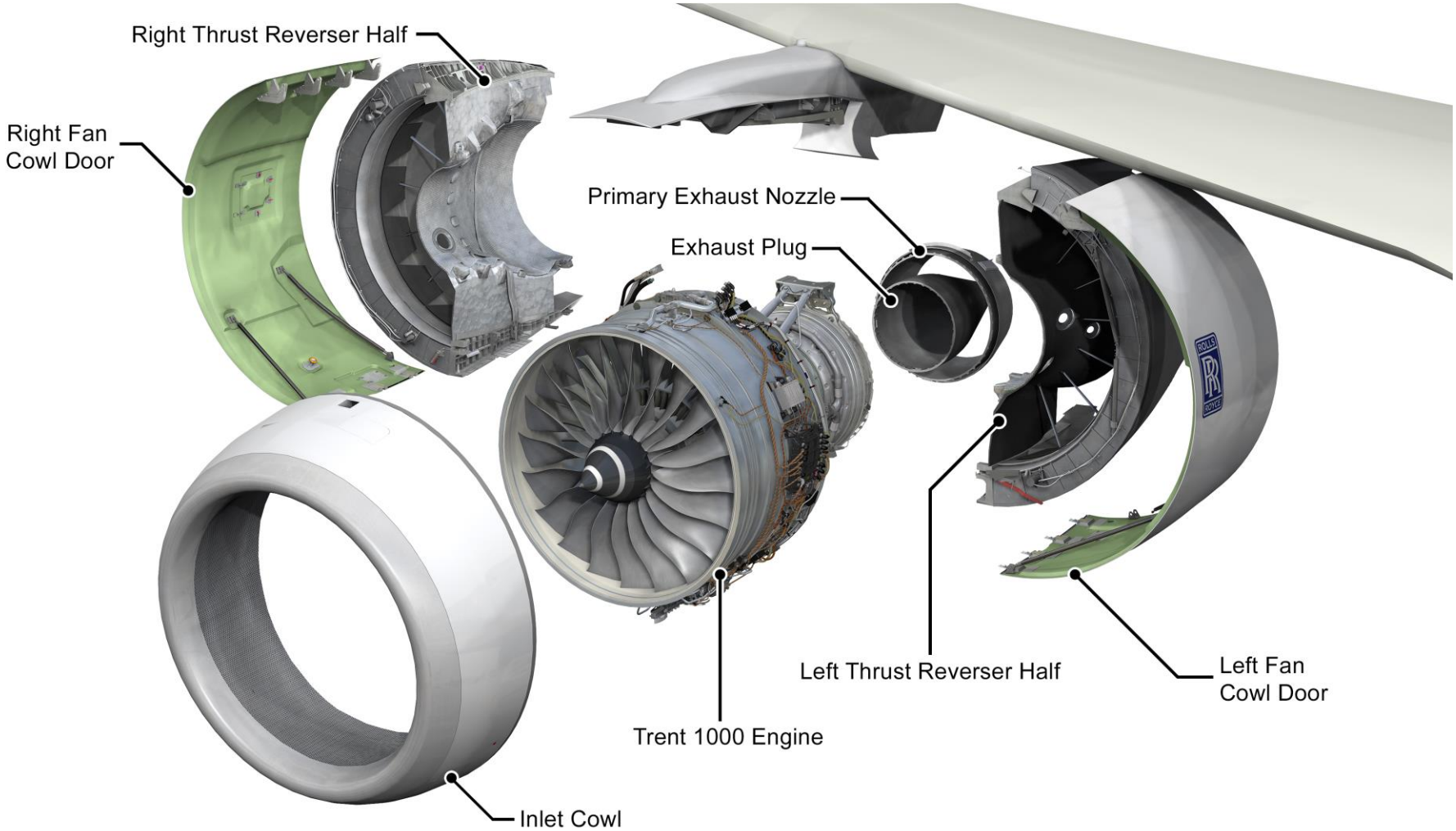

T1000 TEN_LBM_M02_007_01P

NACELLE MAJOR UNITS

© Rolls-Royce plc 2018 Use or disclosure is subject to the legend on the Notice to Holder page

Air Inlet Cowl

Location

The Air Inlet Cowl is attached to the forward flange of the LP Compressor Case and is designed to be interchangeable between left and right engines.

Purpose

The inner surface of the Air Inlet Cowl directs the airflow into the inlet of the engine. The outer surface of the Air Inlet Cowl smoothes the airflow across the rest of the nacelle.

Description

The Air Inlet Cowl incorporates the following features:

- Zone 1 cooling duct
- Anti-ice inlet, ducting and exhaust
- P20/T20 probe
- Thrust Reverser Test Enable Switch
- Fan Cowl and Thrust Reverser Power Door Opening System (PDOS) switches

Zone 1 Cooling

Ram air enters the Zone 1 via an Inlet at the 1 o'clock position on the outer surface of the Inlet Cowl. The airflow is directed into the Zone 1 by an outlet on the rear bulkhead which is connected an air diverter which directs the air around the fire zone to ventilate any hazardous fumes.

Air Inlet Cowl Anti-Icing

The aluminium leading edge of the Air Inlet Cowl is protected against the build up of ice by a supply of HP3 air from the engine. The anti-icing supply duct inlet is at the 11:30 position on the rear bulkhead. The exhaust duct is on the left side of the inlet cowl at approximately the 8 o'clock position.

P20/T20 Probe

The P20/T20 probe protrudes from the inner barrel of the Air Inlet Cowl to sense fan entry pressure and temperature. The probe is located at the 11 o'clock position and is accessed by a panel on the outer surface of the air inlet cowl.

Thrust Reverser Test Enable Switch

A Thrust Reverser Test Enable Switch is located on the left side aft bulkhead below the left PDOS switch. It is hardwired to the EEC Channel B to permit operation of the thrust reverser by the maintenance crew when the engine is not in operation. The signal is also available to Channel A via the interchannel data bus.

PDOS Switches

The Fan Cowl Doors and Thrust Reverser are opened and closed using a self contained hydraulic system. The operating switches for the fan cowl are at the 4 o'clock and 8 o'clock positions on the external surface of the air inlet cowl. The thrust reverser switches are located on the aft bulkhead of the air inlet cowl at the 4 o'clock and the 8 o'clock positions.

© **Rolls-Royce plc 2018** Use or disclosure is subject to the legend on the Notice to Holder page

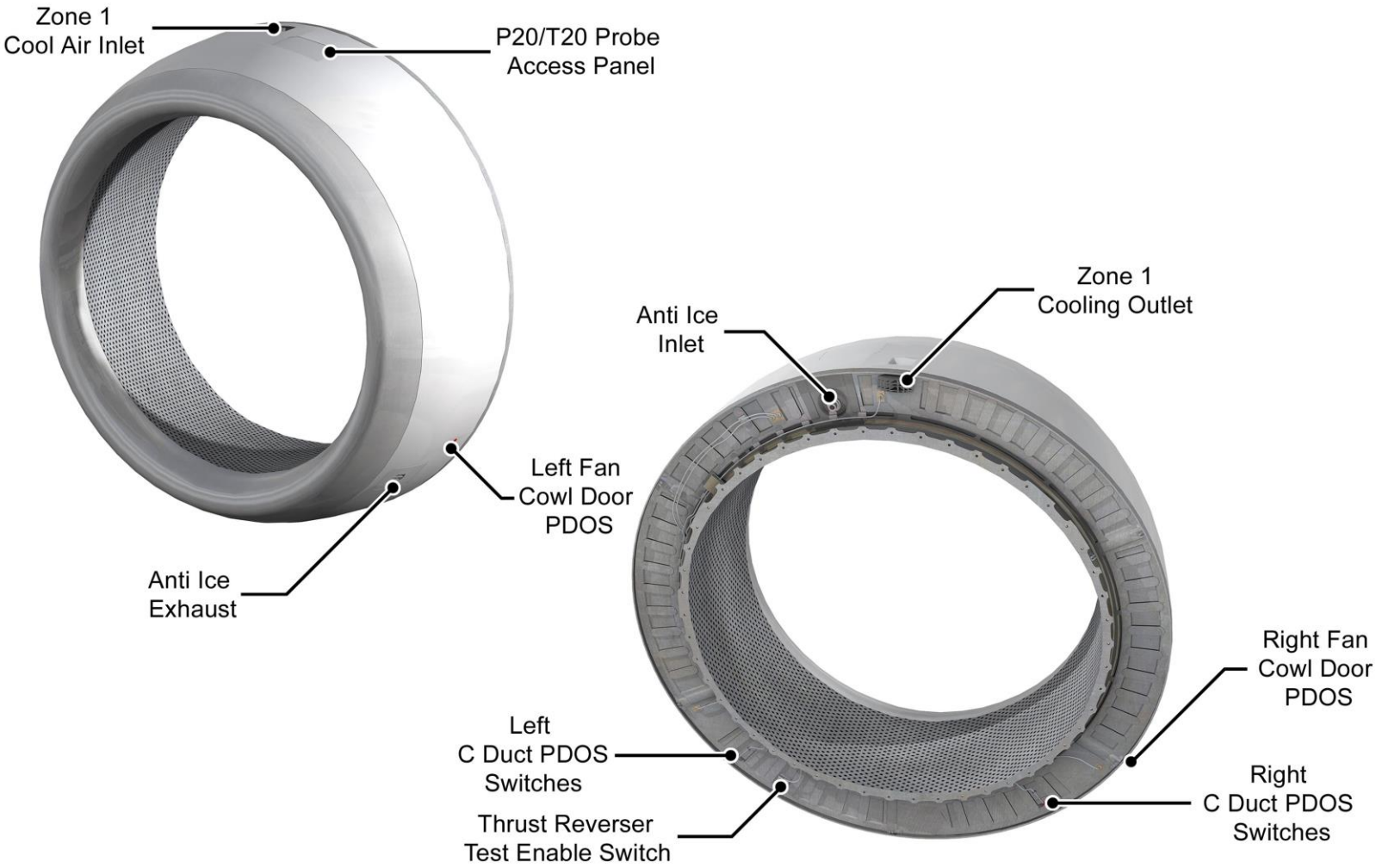

T1000 TEN_LBM_M02_008_01P

AIR INLET COWL

© Rolls-Royce plc 2018 Use or disclosure is subject to the legend on the Notice to Holder page

Power Door Opening System (PDOS)

Description

The PDOS system comprises of the following components:

- Electrically powered hydraulic power pack
- Hydraulic tubes and hoses
- Fan cowl opening actuators
- Thrust Reverser Cowl opening actuators
- Fan cowl actuation and control switches
- Thrust reverser actuation and control switches

All the PDOS components are line replaceable units.

Hydraulic Power Pack

Each engine has one power pack. The power pack is an independent unit located under the number two fairing on the Fan Cowl Support Beam (FCSB). The power pack consists of an electric motor, pump and valves. The power pack also has its own oil reservoir that contains engine oil that is pumped to the Fan Cowl Door and Thrust Reverser Cowl opening actuators when needed.

Hydraulic Tubes and Hoses

The hydraulic tubes and hoses are routed from the PDOS power pack to the following components:

- Fan Cowl opening actuators
- T/R cowl opening actuators

Fan Cowl Hydraulic Actuators

Each fan cowl door has a dedicated hydraulic actuator to open and close the doors. The fan cowl hydraulic actuator is attached between a bracket on the fan cowl door and the engine fancase. The actuators lock when extended to help hold the Fan Cowl Doors open during maintenance. If a fault occurs with the PDOS system then the Fan Cowl Doors can be opened by connecting a hand pump to quick disconnect fittings that are located adjacent to the PDOS power pack.

Thrust Reverser Cowl Hydraulic Opening Actuators

Each Thrust Reverser (T/R) C-duct half has its own hydraulic actuator to open and close the duct for maintenance. The Thrust Reverser hydraulic opening actuator is attached between a bracket on the engine fancase and the Torque Box of the duct. If a fault occurs with the PDOS system then the Thrust Reversers can be opened by connecting a hand pump to quick disconnect fittings on the base of the actuators.

Fan Cowl Actuation and Control Switch

Each fan cowl door has its own operating switch located on the outer surface of the air inlet cowl. The right fan cowl door switch is at the 4 o’clock position, the left door switch is at the 8 o’clock position.

Thrust Reverser Actuation & Control Switches

Each thrust reverser actuator has its own operating switch located on the aft bulkhead of the air inlet cowl. The switch for the right half is at the 4 o’clock position and the switch for the left half is at the 8 o’clock position.

© **Rolls-Royce plc 2018** Use or disclosure is subject to the legend on the Notice to Holder page

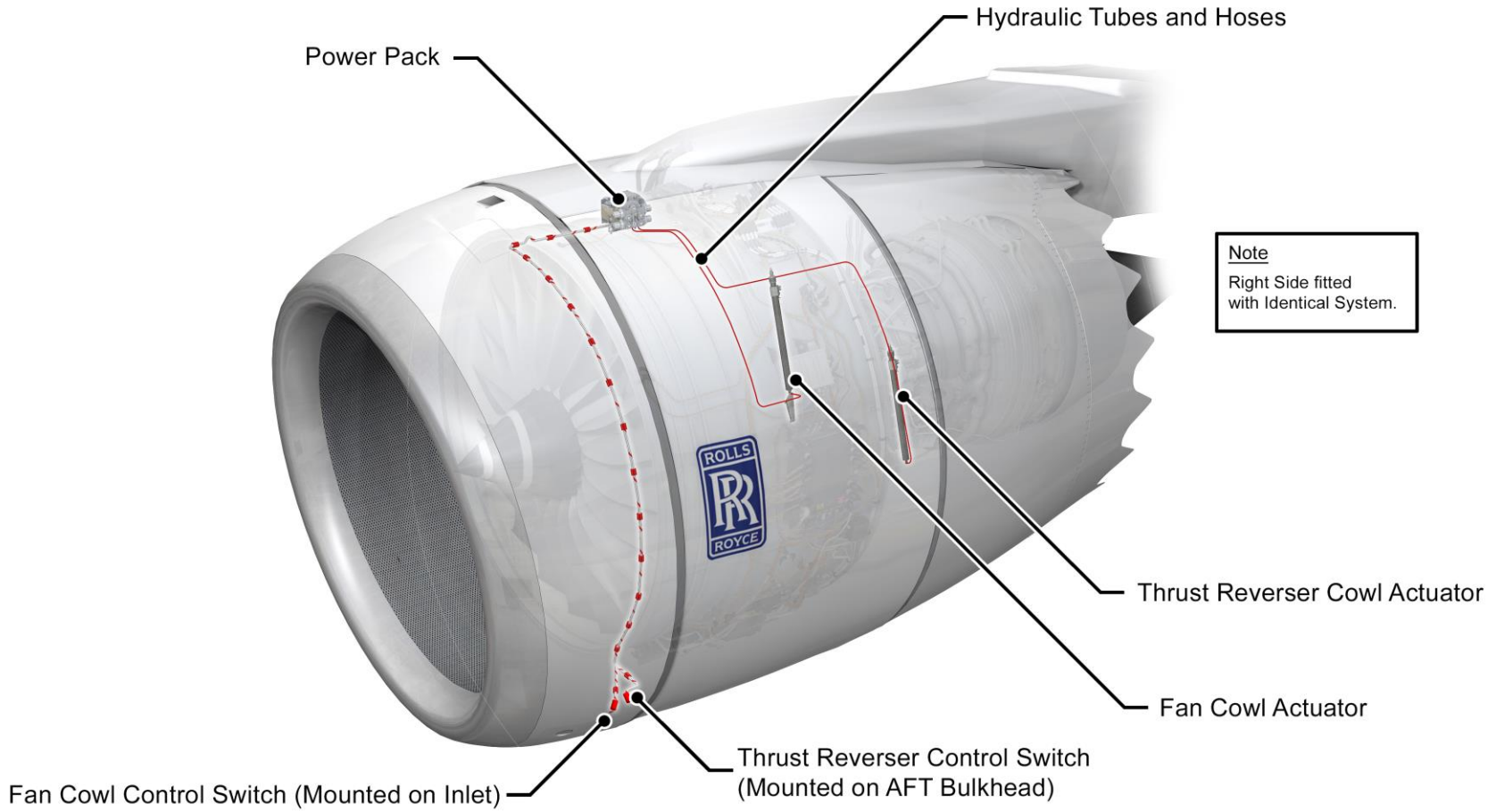

T1000 TEN_LBM_M02_009_01P

POWER DOOR OPENING SYSTEM (PDOS)

© Rolls-Royce plc 2018 Use or disclosure is subject to the legend on the Notice to Holder page

Fan Cowl

Location

The Fan Cowl is located between the Air Inlet Cowl and the Thrust Reverser and encases the Zone 1.

Purpose

The fan cowl provides an aerodynamic fairing over the engine fan case.

Description

The Fan Cowl has a left and right door that is composite in construction. Four quick release pins installed in their associated hinges, secure each door to a pylon-mounted Fan Cowl Support Beam (FCSB).

A chine is fitted to the inboard fan cowl door to improve aircraft aerodynamics over the inner portion of the wing during approach.

The area underneath the fan cowl is a fire compartment; it is designated as Zone 1 and is isolated from other areas of the engine by firewalls and seals. The air that ventilates Zone 1 is exhausted through an outlet on the right fan cowl door, which is also part of the No 2 VFSG servicing door.

The left and right fan cowl doors are secured together by 4 hook latches at the bottom of one door, with associated latch keepers on the opposing door.

Each door has a number of panels and outlets as follows:

Left Fan Cowl Door

- Left VFSG (No 1 VFSG) service access door

Right Fan Cowl Door

- Oil tank access door
- Combined right VFSG (No2 VFSG) service access door and Zone 1 vent
- Centrifugal breather outlet

Hold-Open Rods

Each door has two hold-open rods that attach to brackets on the fan case and to fittings on the fan cowl doors. The forward hold open rod is of a telescopic design and the aft is a fixed length type. The hydraulic actuator takes the weight of the fan cowl door once it has opened and has locked in position.

Actuators

Each fan cowl door has a single opening actuator attached between the engine and the fan cowl. The Actuator has a lock inside to lock the fan cowl door in the open position.

© Rolls-Royce plc 2018 Use or disclosure is subject to the legend on the Notice to Holder page

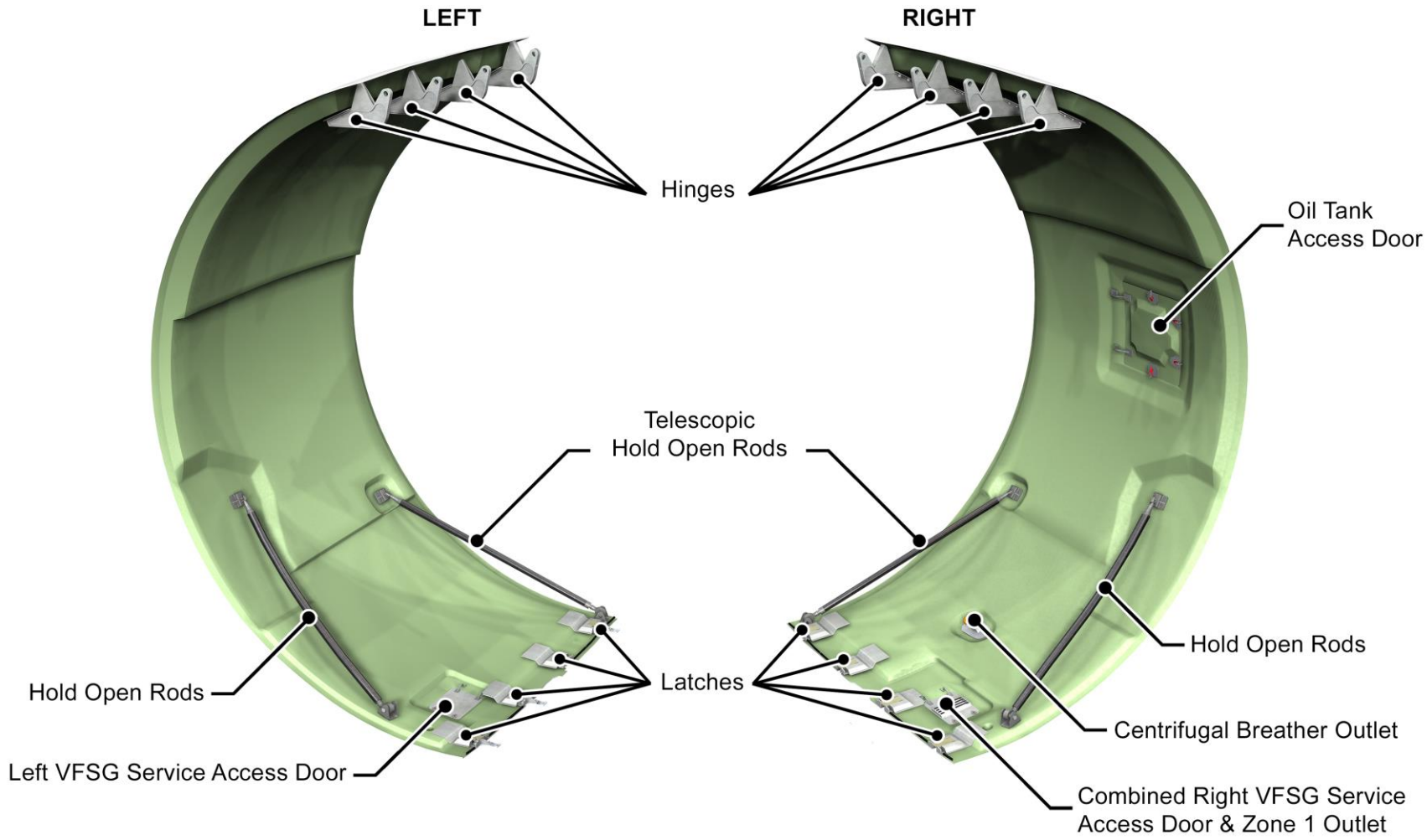

T1000 TEN_LBM_M02_010_01P

FAN COWL DOORS

© Rolls-Royce plc 2018 Use or disclosure is subject to the legend on the Notice to Holder page

Thrust Reverser Actuation System (TRAS)

Purpose

To redirect the engines LP Compressor outlet air (fan air) in a forward direction to create a controllable reverse thrust that aids the aircraft braking system in decreasing the speed of the aircraft on the ground.

Description

There are two halves to each assembly, called C-ducts, through which the fan air flows. Each C-duct has the following components:

- 5 Hinges – 2 fixed hinges and 3 cross-links.
- 1 Torque box.
- 1 Translating sleeve (Track lock on right sleeve only).
- 2 Hydraulic actuators with a lock inside each one.
- 2 Proximity Sensors to sense lock position.
- 6 Blocker doors and drag links.
- 8 Cascades Segments.
- 1 Linear Variable Differential Transducer (LVDT) in the upper actuator to sense the Translating Sleeve position.
- 1 Manual drive unit attached to the lower actuators only.

Translating Sleeves

The translating sleeves are composite assemblies with an inner and outer sleeve. The inner sleeve forms the outer wall of the fan duct and the outer sleeve forms the exterior contour of the T/R. The inner and outer sleeves are joined together at the chevron-designed trailing edge. This type of design helps to reduce aircraft cabin noise.

The sleeves are located to the rear of the fan cowl and are attached to the C-ducts by sliders and tracks.

The translating sleeves are mechanically linked together by a flexible synchronisation (sync) shaft found inside the deploy tube which ensures the translating sleeves deploy and stow together.

Hydraulic Actuators

Two hydraulic actuators per translating sleeve are linked together, and to the adjacent translating sleeve, by the sync shaft to operate each thrust reverser. Both actuators have internal locks with the lower actuators incorporating a manual drive unit that utilises the sync shaft to deploy and stow the translating sleeves for maintenance.

Blocker Door and Drag Links

The blocker doors prevent fan air exiting rearwards when the translating sleeve is extended. The blocker doors are attached at their front edge to the translating sleeve and at the rear to the inner fixed structure by a drag link.

The six-blocker doors are made from epoxy-graphite. Four of the doors are the same shape. The remaining two doors positioned at the 12 and 6 o’clock position, are contoured to the shape of the upper and lower bifurcations.

Cascade Segments

The cascade segments control the direction of the fan air exhaust when the translating sleeves are deployed. The cascades are graphite-epoxy assemblies located between the torque box and the cascade segment attachment ring.

© **Rolls-Royce plc 2018** Use or disclosure is subject to the legend on the Notice to Holder page

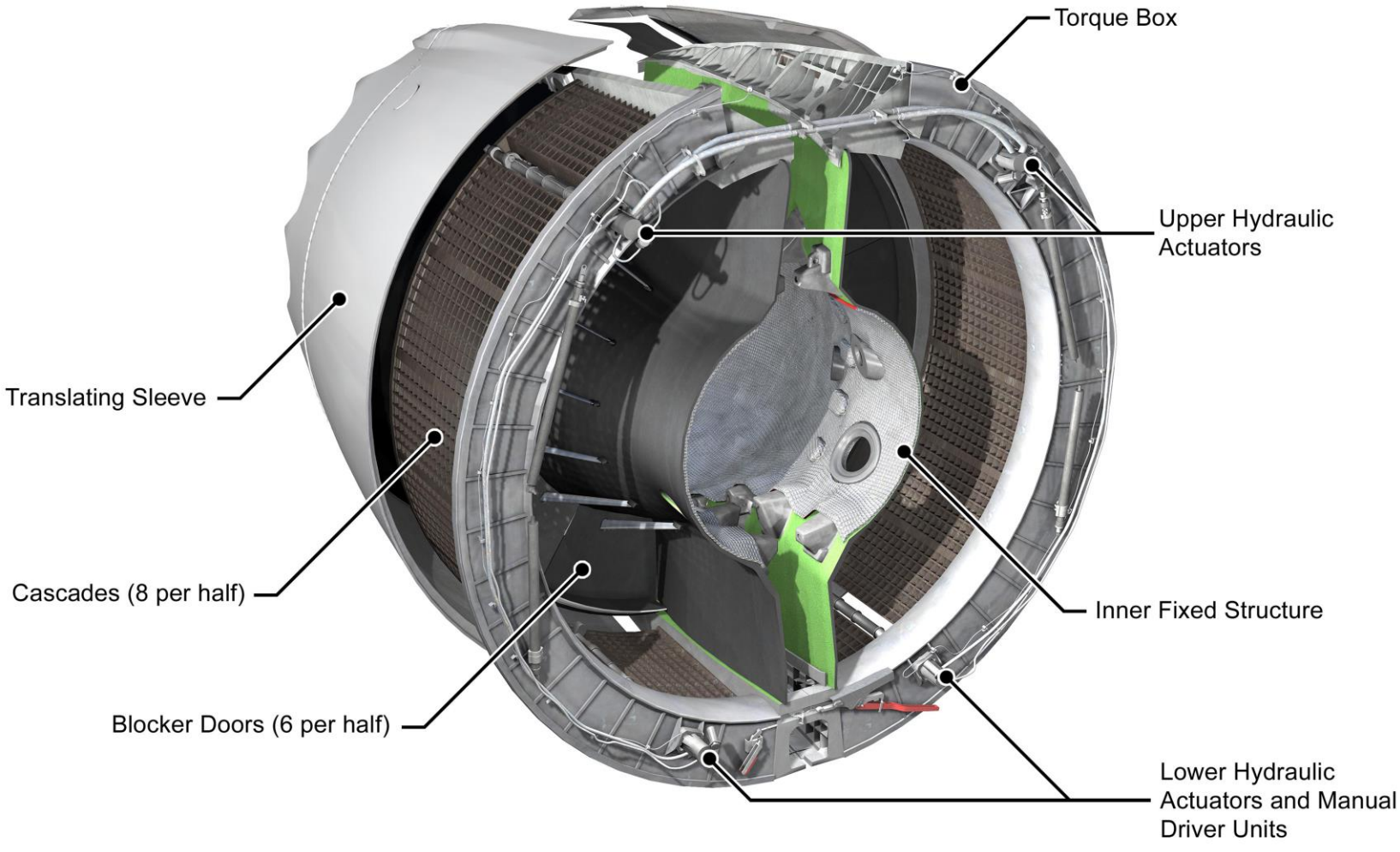

THRUST REVERSER ACTUATION SYSTEM (TRAS)

© Rolls-Royce plc 2018 Use or disclosure is subject to the legend on the Notice to Holder page

THRUST REVERSER OPERATION

Introduction

The Thrust Reverser assembly is attached to the pylon by 2 hinges and 3 cross-links. The two (2) C-ducts are latched at the bottom by a total of 8 latches, these are:

- 3 C-duct latches (Latch numbers 2, 3 and 4).
- 2 latches on the Torque Box. No 1 latch and a vee blade latch (the vee blade latch acts as a take up device).
- 1 Bifurcation Latch System (BLS) handle, operated by a single handle located between latches 2 and 3.
- 1 latch at the rear of the translating sleeve.
- 1 core cowl Latch.

Opening a panel at the 6 o'clock position provides access to the number 2 and 3 latches and also the BLS handle. This panel also acts as a pressure relief door in case of Nacelle over pressurisation.

On the inner surface of the access door is also located the translating sleeves inhibition pins. When in position the pins will mechanically prevent the translating sleeves from being deployed if the Thrust Reverser is found to be unserviceable for flight.

Description

When the Thrust Reverser translating sleeves are in the forward "stowed" position, the LP Compressor outlet air (fan air) passes through the bypass duct and exits at the rear of the fan duct to produce forward thrust.

When the Thrust Reverser sleeves move rearwards to the "deployed" position, drag links attached to the blocker doors move the blocker doors into the bypass duct. This prevents the fan air from exiting rearwards and directs the airflow forwards through the cascade segments that have been uncovered by the rearwards movement of the translating sleeves. The cascade segments turn the fan air in a forward direction to produce reverse thrust and also direct the air away from the engine inlet to prevent re-ingestion of the fan air or any debris from the ground entering the engine.

© **Rolls-Royce plc 2018** Use or disclosure is subject to the legend on the Notice to Holder page

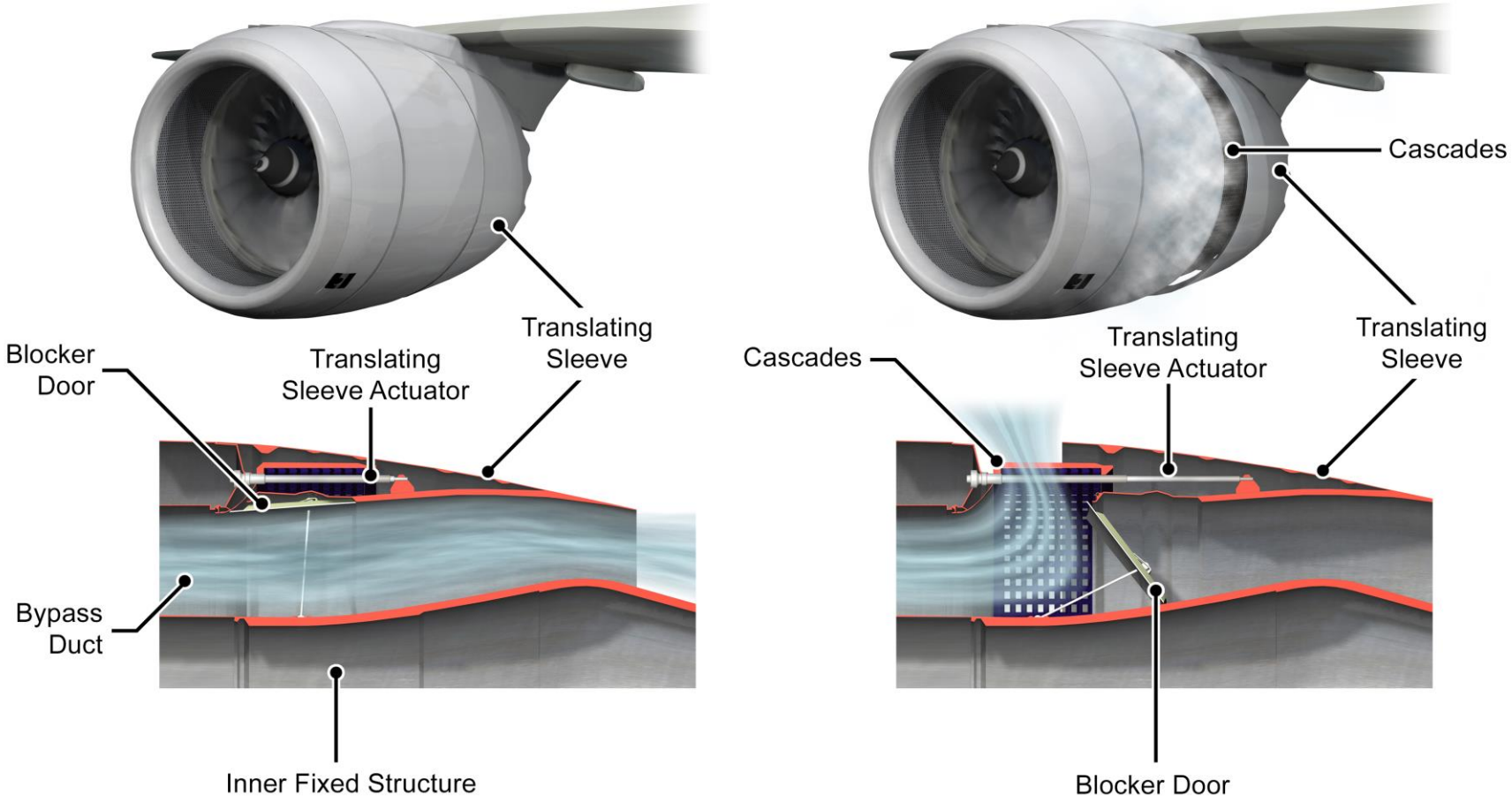

T1000 TEN_LBM_M02_012_01P

THRUST REVERSER OPERATION

© Rolls-Royce plc 2018 Use or disclosure is subject to the legend on the Notice to Holder page

Thrust Reverser Control and Indication

Selection of reverse thrust and subsequent increase in thrust is achieved by moving the engine throttle control levers to the idle position and lifting the reverse thrust levers upwards. This operation will move the translating cowls rearwards to the “deploy” position.

Pushing the reverse thrust levers down will cancel reverse thrust and “stow” the translating cowl.

Indication

Indication to the flight deck of thrust reverser movement is seen as either amber or green “REV” in the Turbofan Power Ratio (TPR) gauge. The Linear Variable Differential Transducers (LVDT) on the upper actuators provides both indications:

- Amber REV = Sleeves in transit = sleeve position ≥ 10% deployed
- Green REV = Sleeves are deployed = sleeve position ≥ 90% deployed

Reverse Thrust Lever Interlock

A reverse lever interlock is located within the control stand on the flight deck. The EEC controls the engine thrust according to throttle lever position and reverse thrust lever position.

When the reverse thrust levers are lifted engine thrust is physically limited to reverse idle by a baulking device in the control stand. When the upper actuators LVDTs indicate the translating sleeves are more than 30% deployed the EEC will command the relevant Remote Power Distribution Unit (RPDU) to energise the Reverse Lever Interlock Solenoid via the Common Data Network (CDN). This will have the effect of removing the baulking pin from the Reverse Thrust Lever mechanism allowing the Reverse Thrust Levers to be moved to the full reverse thrust stop if required. A switch on the interlock provides the EEC with feedback of pin position via the CDN using a Remote Data Concentrator (RDC).

When the upper actuators LVDTs indicate the Translating Sleeves are less than 30% deployed the EEC will command the relevant RPDU to de-energise the Interlock Solenoid. This will have the effect of re-setting the baulking pin position. The switch on the Interlock provides the EEC with feedback of pin position via the CDN using an RDC.

© **Rolls-Royce plc 2018** Use or disclosure is subject to the legend on the Notice to Holder page

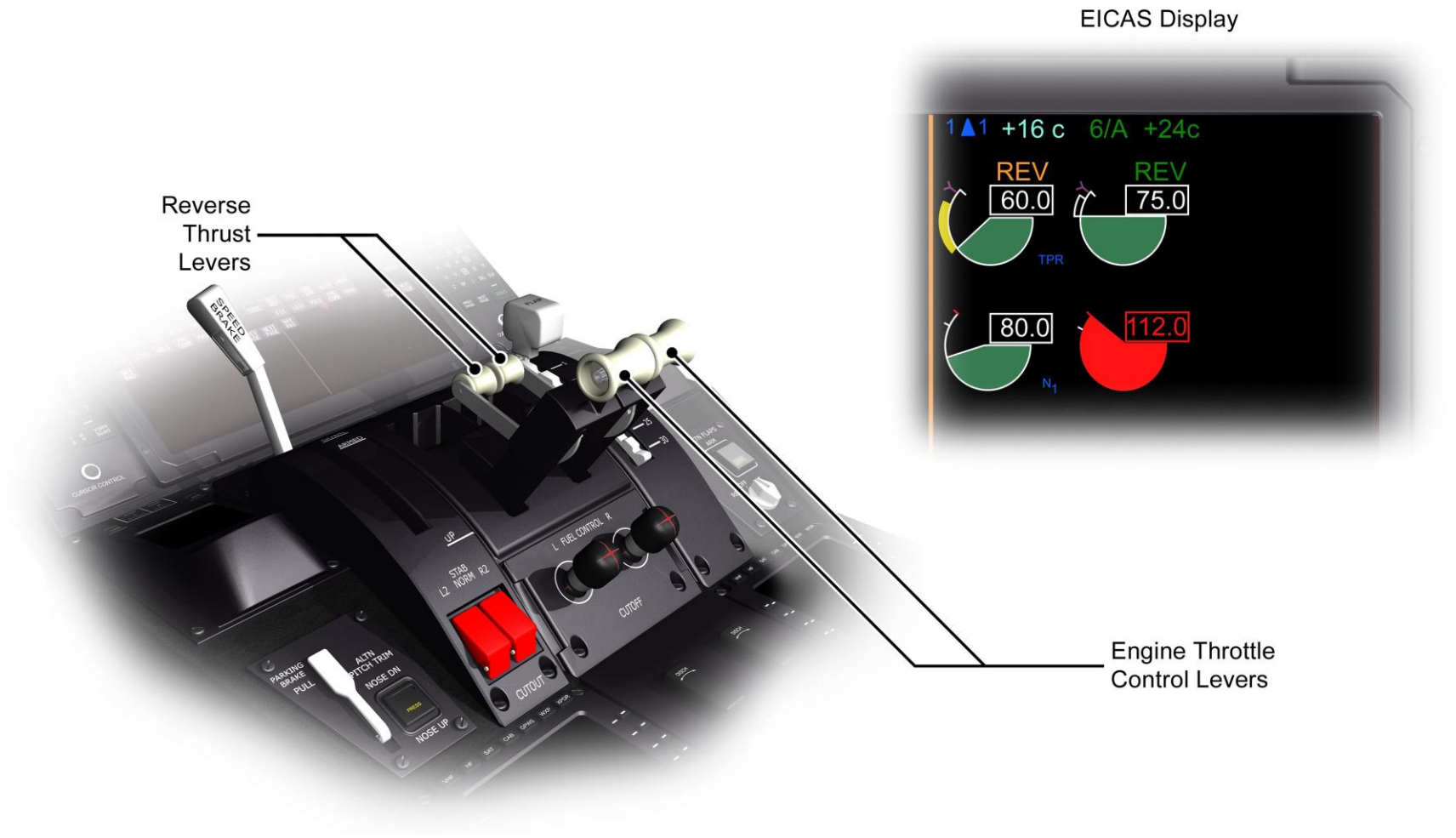

T1000 TEN_LBM_M02_013_01P

THRUST REVERSER CONTROL AND INDICATION

© Rolls-Royce plc 2018 Use or disclosure is subject to the legend on the Notice to Holder page

Thrust Reverser Actuation System (TRAS)

The thrust reverser system consists of a number of units, listed below:

Thrust Control Module

Within the thrust control module is:

- **The Reverse Thrust Levers** – With the Engine Thrust Levers in the forward idle detent the Reverse Thrust Levers can be lifted to initiate and control reverse thrust.
- **Thrust Lever Resolvers** – Each throttle has two resolvers to provide each channel of the EEC with a sense of throttle position. This is seen as Throttle Resolver Angle (TRA).
- **Reverse Thrust Lever Interlock Solenoid** – Prevents movement of the reverse thrust levers beyond reverse idle until it is confirmed that the translating cowl has deployed.
- **Thrust Reverser Track Lock (T/L) Switch** – Movement of the reverse thrust levers operates the switch to provide 28vDC to the track lock solenoid.
- **Thrust Reverser Directional Control Switch** – Movement of the reverse thrust levers operates the switch to provide 28v DC to the Directional Control Valve (DCV) solenoid.

Engine Electronic Controller (EEC) – The EEC controls the operation of the thrust reverser via the Hydraulic Control Unit (HCU) using inputs from the aircraft.

Hydraulic Control Unit (HCU) – The HCU is part of the hydraulic module and is located in the pylon aft fairing. The HCU consists of the Isolation Valve (IV) to isolate the hydraulic pressure to the thrust reverser system and a Directional Control Valve (DCV) to control the direction (deploy or stow) of the thrust reverser system.

- **Isolation Valve (IV)** – The IV solenoid is energised using 28v DC via the EEC as a function of:
- TRA
- Aircraft is on the Ground.
- Confirmation that the engine is running.
- A proximity type pressure sensor within the HCU provides confirmation that hydraulic pressure is available. The signal is sent to the EEC via the MEDC using the Common Data Network.
- **Directional Control Valve (DCV)** – 28V DC is supplied via an aircraft SPDU in the power panel to the DCV via a Thermal Circuit Breaker when reverse thrust is commanded. A switch on the thrust control module will initiate the command and the EEC will ground the solenoid as a function of:
    - TRA
    - Aircraft is on the Ground
    - Confirmation that the engine is running.

© **Rolls-Royce plc 2018** Use or disclosure is subject to the legend on the Notice to Holder page

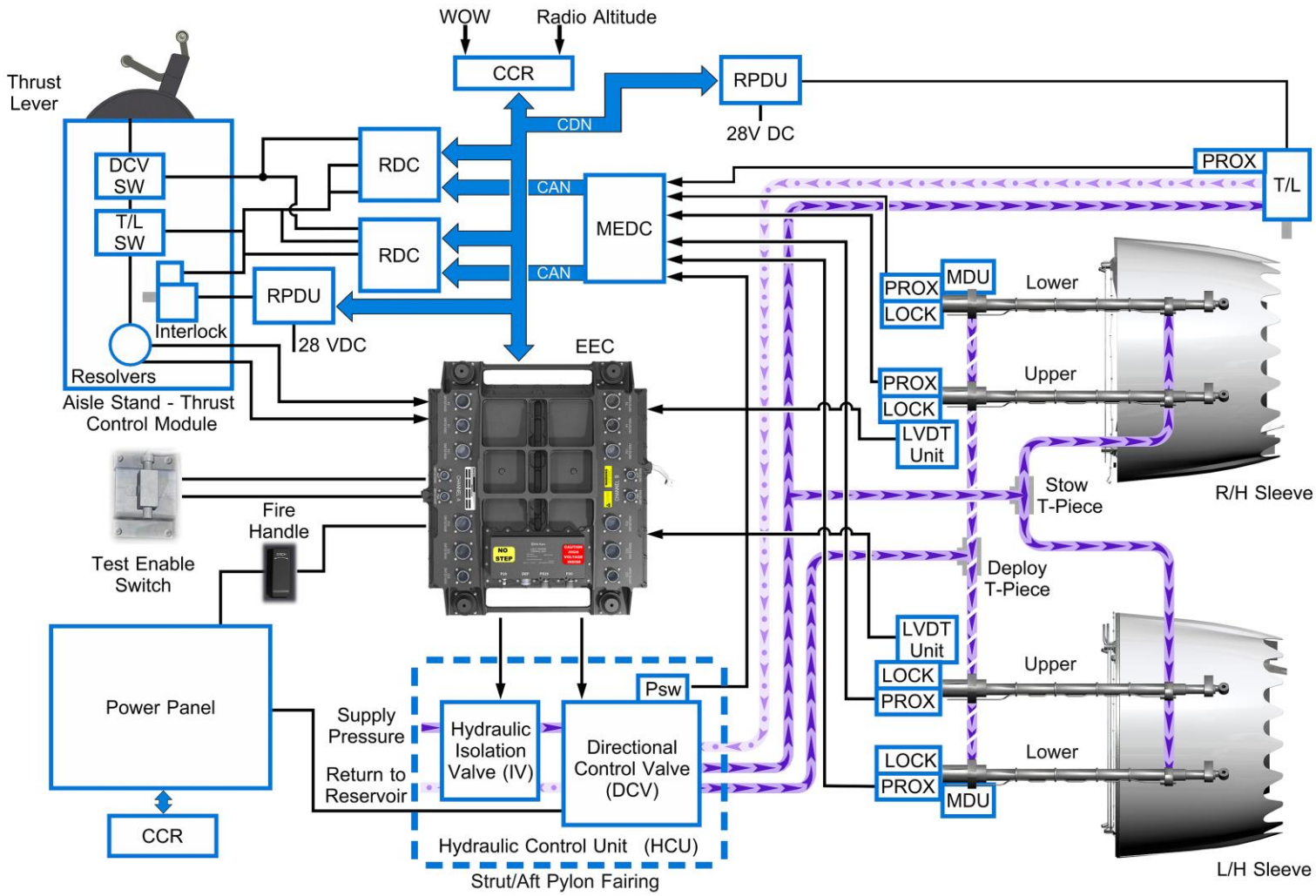

T1000 TEN_LBM_M02_011_01P

THRUST REVERSER ACTUATION SYSTEM SCHEMATIC

© Rolls-Royce plc 2018 Use or disclosure is subject to the legend on the Notice to Holder page

Thrust Reverser Operation (Deploy)

Below is a simplified breakdown of the deploy sequence:

1. Engine Thrust Lever to idle.
2. TRA signal from resolvers to EEC.
3. EEC receives a sense of aircraft on the ground from the CDN.
4. Reverse levers lifted by flight crew. TRA signal to EEC, DCV switch and T/L switch close.
5. EEC energises IV Solenoid and hydraulic pressure goes through the DCV to the rod end of the actuators to enable them to overstow the translating cowls. Proximity sensor on HCU signals the EEC, via the MEDC and CDN, that T/R is pressurised.

Note: Overstow is where the translating sleeve moves beyond the normal stow position. By overstowing the translating sleeve the pressure on the locks inside the actuators is removed thereby making it easier to release or lock the actuator locks.

6. T/L switch signals RPDU via RDC and CDN to energise Track Lock Solenoid to remove T/L blade. EEC receives T/L position from proximity sensor via MEDC and CDN.
7. The Reverse Lever Interlock prevents reverse Thrust Levers from moving to Full Reverse Thrust. The EEC holds the engine at reverse idle.
8. DCV switch allows 28V DC to DCV and EEC grounds the solenoid to allow it to energise and send hydraulic pressure to the head end of the actuators.
9. The actuator locks, unlock and begin to deploy the Translating Sleeves.
10. Proximity sensors on the actuators indicate to the EEC via the MEDC and the CDN that the locks are open.
11. Actuators extend and translating cowls deploys.
12. LVDT's on the upper actuators feedback to the EEC that the translating sleeves are beginning to deploy.
13. At 10% deployment the amber **REV** is seen on the TPR gauge to show the thrust reverser is in transit.
14. At 30% deployed EEC energises the solenoid to release the Reverse Thrust Lever Interlock. The switch indicates to the EEC that the interlock has been removed.
15. Flight crew move the Reverse Thrust Levers to the required Reverse Thrust position.
16. When the LVDTs on the upper actuators indicate 90% deployment, the EEC and sets the green **REV** in the TPR gauge.

© **Rolls-Royce plc 2018** Use or disclosure is subject to the legend on the Notice to Holder page

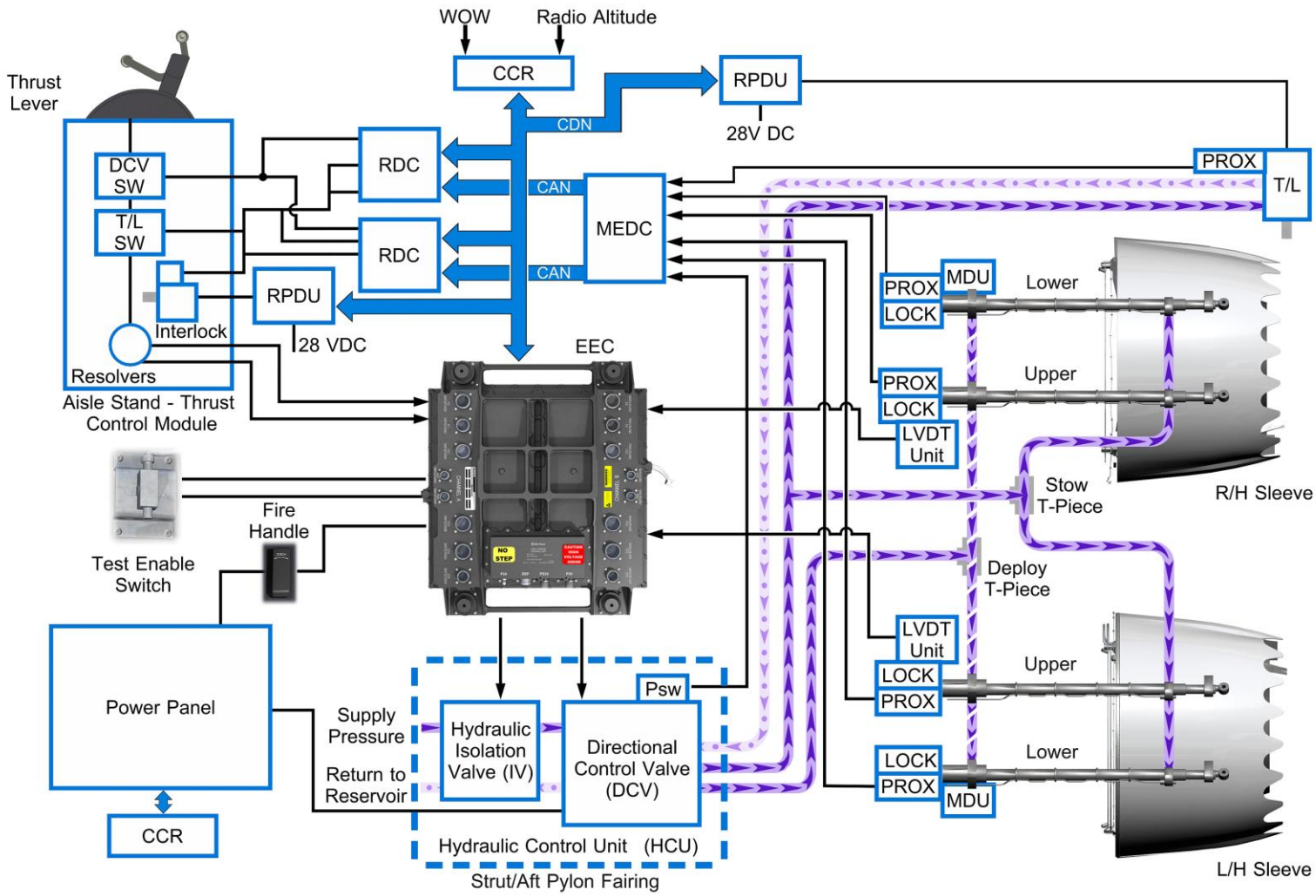

T1000 TEN_LBM_M02_011_01P

THRUST REVERSER OPERATION - DEPLOY

© Rolls-Royce plc 2018 Use or disclosure is subject to the legend on the Notice to Holder page

Thrust Reverser Operation (Stow)

Below is a simplified breakdown of the stow sequence:

1. Engine Thrust Lever will still be at idle.
2. TRA signal from resolvers to EEC.
3. Reverse Thrust Levers pushed forward by the flight crew. Engine thrust will decrease with the action of the Reverse Thrust levers but will be limited to reverse Idle throughout the stow process. TRA signal to EEC to open relay to remove grounding for DCV solenoid, DCV and T/L switches open.
4. DCV switch signal sent to Secondary Power Distribution Unit (SPDU) in the Power Panel via RDC and CDN to remove power from the DCV.
5. With the DCV de-energised (item 4) the valve moves to the stow position to send hydraulic power to the rod end of the actuator to begin stowing the translating sleeves.
6. Actuator LVDTs signal passed to the EEC and sets amber **REV** in the TPR gauge when less than 90% deployed.
7. At 30% deployment the EEC de-energises the Reverse Thrust Lever Interlock Solenoid.
8. The Reverse Thrust Lever Interlock engages and the Interlock Switch indicates to the EEC that it is engaged. Engine power is limited to Reverse Idle.
9. The Translating Sleeves continue to stow.
10. As the Translating Sleeves move to the fully stowed position the actuator locks engage.
11. The actuator proximity sensors inform the EEC that the actuator locks are engaged via the MEDC and CDN.
12. T/L switch signal is processed by the RDC via CDN to RPDU to de-energise the Track Lock solenoid.
13. Track lock moves to the locked position and the proximity sensor provides a status signal to the EEC via MEDC and CDN.
14. EEC de-energises the IV solenoid when forward thrust has been confirmed (item 3) AND, two out of four actuator locks are confirmed to be locked, (plus a 20 second time delay).
15. The Thrust Reverser Hydraulic System de-pressurises.

© **Rolls-Royce plc 2018** Use or disclosure is subject to the legend on the Notice to Holder page

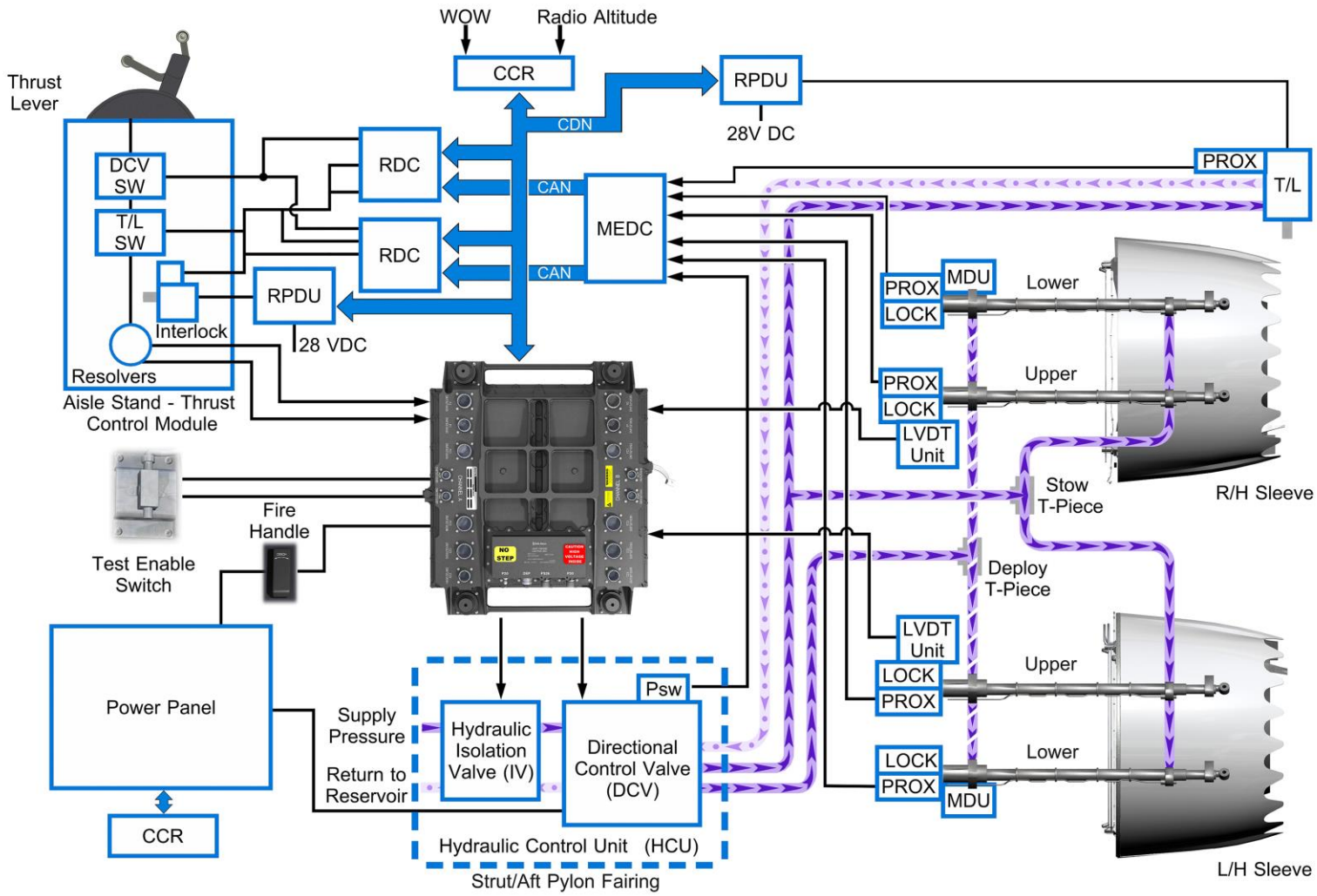

T1000 TEN_LBM_M02_014_01P

THRUST REVERSER OPERATION - STOW

© Rolls-Royce plc 2018 Use or disclosure is subject to the legend on the Notice to Holder page

Engine Exhaust System

The Trent 1000 engine exhaust consists of two separate airflows that are mixed outside the physical boundaries of the engine. This arrangement is called a separate jets configuration.

Cold Bypass Airflow Exhaust

The cold stream, or bypass flow, exiting the engine is exhausted through the inner and outer barrels of the thrust reverser assembly.

Primary Exhaust System

The hot stream gas exiting the engine's core is exhausted through the primary exhaust system. The primary exhaust system comprises the Primary Exhaust Nozzle and a two-piece Centerbody Plug.

The nozzle formed by these two components provides the aerodynamic control of engine core flow, while optimising acoustic and nozzle performance characteristics.

Primary Exhaust Nozzle

The primary exhaust nozzle forms the outer annulus of the primary exhaust system. It is bolted to the outer flange of the Tail Bearing Housing (TBH) structure.

Centerbody Plug

The centerbody plug forms the inner annulus of the primary exhaust system. It is comprised of a forward and aft section. The forward section is attached to the inner flange of the TBH, the aft section is attached to the rear flange of the forward section.

© **Rolls-Royce plc 2018** Use or disclosure is subject to the legend on the Notice to Holder page

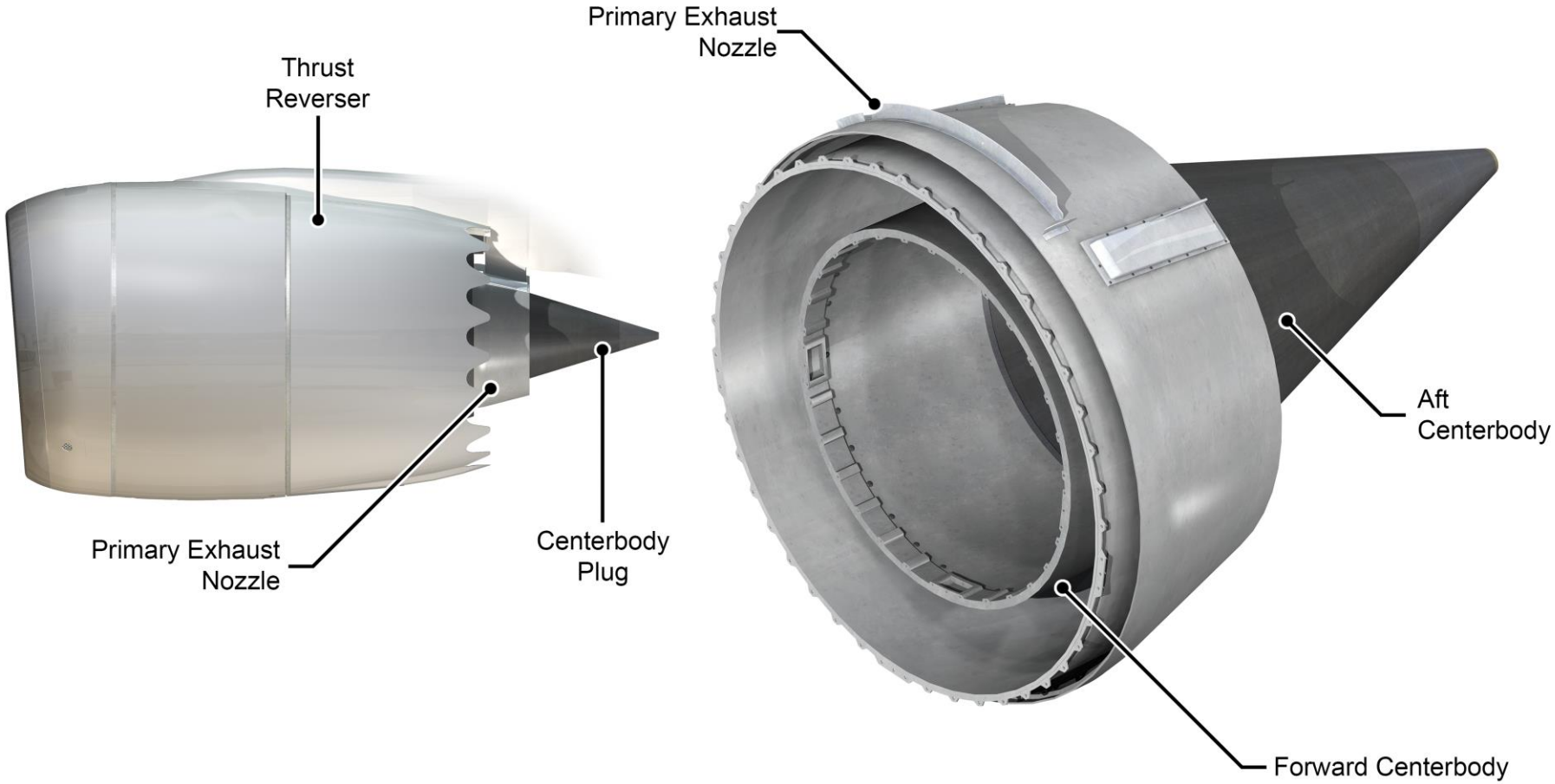

T1000 TEN_LBM_M02_015_01P

ENGINE EXHAUST SYSTEM

© Rolls-Royce plc 2018 Use or disclosure is subject to the legend on the Notice to Holder page

Maintenance Practices

Thrust Reverser Inhibition

Thrust Reverser Inhibition for Ground and Flight.

Introduction

The thrust reverser may require inhibiting for safety reasons during maintenance or when the thrust reverser becomes unserviceable. To perform this task access to the Hydraulic Control Unit (HCU) located in the pylon aft fairing will be required.

Ground Thrust Reverser Inhibition

The Isolation Valve, which is part of the HCU, has an inhibition lever that must be pushed in towards the valve body to the inhibit position. A pin, stowed and lanyarded to the HCU, is then installed through the lever into the body of the HCU.

By moving the lever to the inhibit position and installing the inhibition pin the aircraft hydraulic system will be isolated from the thrust reverser.

When correctly installed the access panel can then be installed if required.

Flight Thrust Reverser Inhibition

If the thrust reverser becomes unserviceable it is possible to inhibit the assembly for flight. In this case the isolation valve must be inhibited, as above, and in addition both translating sleeves must be prevented from deploying by inserting a pin into the track of each translating sleeve. Once installed the red tip of the inhibiting pins can be seen protruding from the outer surface of each Translating Sleeve.

The translating sleeve inhibition pins can be found inside the C-duct latch panel at the 6 o’clock position.

© **Rolls-Royce plc 2018** Use or disclosure is subject to the legend on the Notice to Holder page

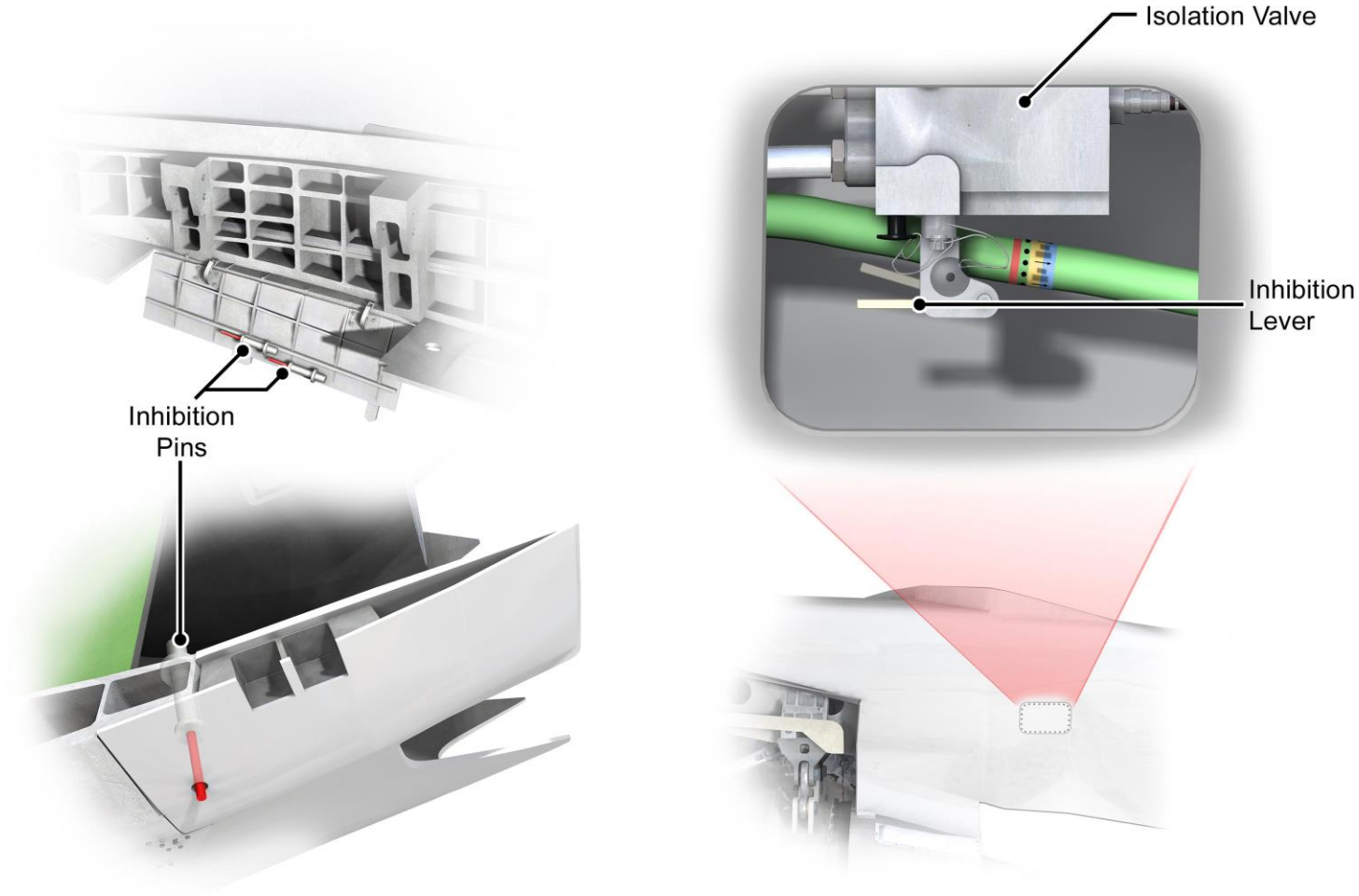

T1000 TEN_LBM_M02_016_01P

THRUST REVERSER INHIBITION FOR GROUND AND FLIGHT

© Rolls-Royce plc 2018 Use or disclosure is subject to the legend on the Notice to Holder page

Maintenance Practices

Open and Close Fan Cowl Doors (PDOS Method)

The following is a brief description of these tasks. Refer to the AMM for the full description and the relevant OMSD for the correct use of any specialised tooling.

Open Fan Cowl Doors For Access

AMM Task B787-A-R71-11-04-00B-540A-A

1. Carry out the steps required to ensure that the Engine Start switch and Fuel Control switch are not operated.
2. Open the four Fan Cowl Latches in order starting from the rear latch and working forwards.
3. Push the Fan Cowl PDOS switch to open the Fan Cowl Door until it stops in the fully open position.
4. Ensure that the forward telescopic hold open rod is fully extended and locked.

NOTE: The hold open rod is fully locked when a **YELLOW** safety stripe is seen above the locking collar.

5. Release the Fan Cowl PDOS switch to let the actuator hold the weight of the fan cowl door.
6. Release the aft hold open rod from its stowage position on the Inlet Cowl and connect it to a bracket and the Fan Case.

WARNING:

DO NOT KEEP THE FAN COWL DOORS OPEN IF THE WIND IS MORE THAN 40 KNOTS (74 KM/H). THE WIND CAN BREAK THE HOLD-OPEN RODS, AND RELEASE THE FAN COWL. INJURIES TO PERSONNEL AND DAMAGE TO EQUIPMENT CAN OCCUR.

Close Fan Cowl Doors After Access

AMM Task B787-A-R71-11-04-00B-740A-A

CAUTION:

MAKE SURE THE THRUST REVERSERS ARE FULLY CLOSED BEFORE YOU CLOSE THE FAN COWL DOORS. IF YOU DO NOT OBEY THIS INSTRUCTION, DAMAGE TO THE FAN COWL DOORS AND THE THRUST REVERSER CAN OCCUR.

1. Disconnect the aft Hold Open Rod and place in the stowage position on the Fan Cowl Door.
2. Install an unlock pole to the collar of the forward telescopic hold open rod and move it to the unlock position.
3. Ensure the hold open rod is fully unlocked. A **RED** safety stripe will be seen below the locking collar when the hold open rod is fully unlocked.
4. Push and hold the Fan Cowl PDOS switch until the fan cowl stops in the fully open position.
5. Release the Fan Cowl PDOS switch to close the Fan Cowl Door.

NOTE: Gravity causes the fan cowl's descent. The actuator controls the descent speed of the fan cowl.

6. Ensure the Fan Cowl is fully closed before closing the Fan Cowl Latches.
7. Close the four Fan Cowl Latches in order starting from the forward latch and working rearwards.

NOTE: If the PDOS system is unserviceable the Fan Cowl Doors can be opened and closed manually. Refer to AMM task B787-A-R71-11-04-00D-540A-A.

© **Rolls-Royce plc 2018** Use or disclosure is subject to the legend on the Notice to Holder page

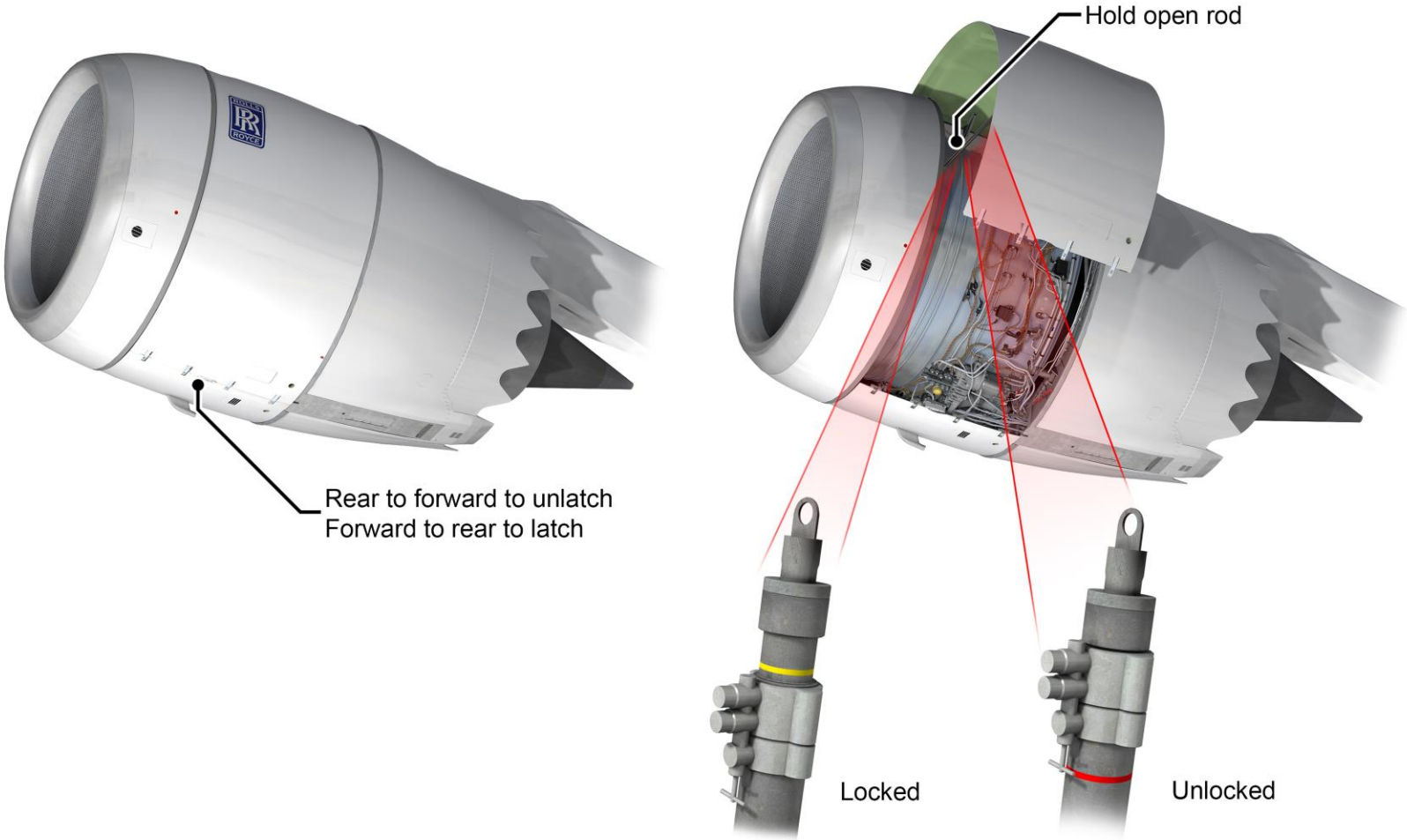

T1000 TEN_LBM_M02_017_01P

OPEN AND CLOSE FAN COWL DOORS FOR ACCESS

© Rolls-Royce plc 2018 Use or disclosure is subject to the legend on the Notice to Holder page

Maintenance Practices

Open and Close Thrust Reverser (PDOS METHOD).

The following is a brief description of these tasks. Refer to the AMM for the full description and the relevant OMSD for the correct use of any specialised tooling.

Open Thrust Reverser for Access

AMM Task B787-A-R78-31-00-20B-540A-A

WARNING:

DO THE DEACTIVATION PROCEDURE TO PREVENT THE OPERATION OF THE THRUST REVERSER. ACCIDENTAL OPERATION OF THE THRUST REVERSER CAN CAUSE INJURIES TO PERSONNEL AND DAMAGE TO EQUIPMENT.

1. Ensure the Fan Cowl Doors are open.
2. Disengage the 8 latches in order, as follows:
   a. Open Bifurcation Latch System (BLS) Handle.
   b. Open the Translating sleeve latch.
   c. Open the Core Cowl latch.
   d. Open C-duct latches 4, 3 and 2.
   e. Open the number 1 Latch.
   f. Open the V-blade latch.
3. Push and hold the PDOS switch until the thrust reverser stops and is in the fully open position, then release the switch to let the actuator hold the weight.
4. Remove the telescopic hold open rod from its stowed position, extend and locate to a bracket on the fan case.

Note: The hold open rod is fully locked when a **YELLOW** safety band is seen above the locking collar.

© **Rolls-Royce plc 2018** Use or disclosure is subject to the legend on the Notice to Holder page

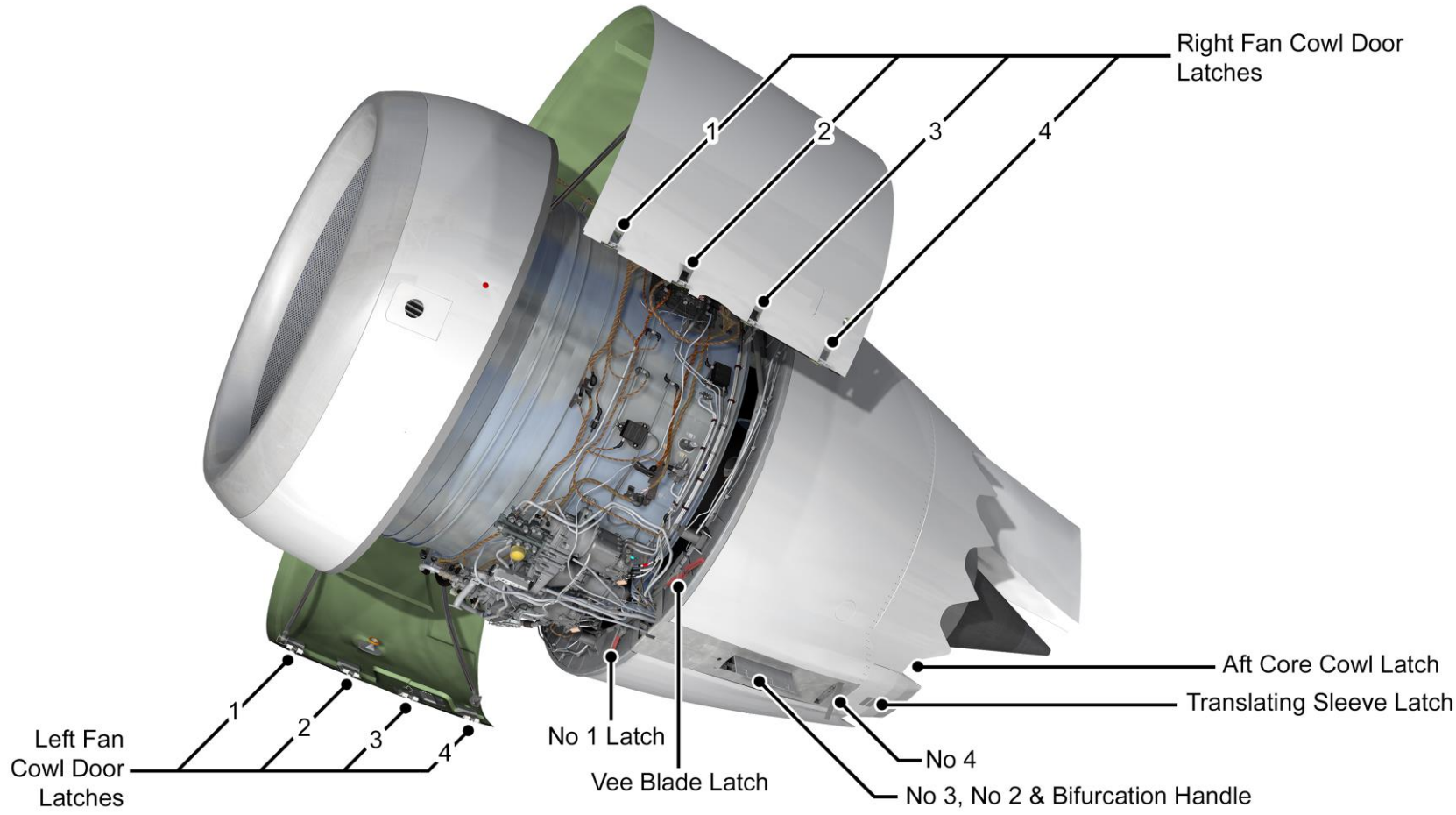

T1000 TEN_LBM_M02_018_01P

OPEN THRUST REVERSER FOR ACCESS (PDOS)

© Rolls-Royce plc 2018 Use or disclosure is subject to the legend on the Notice to Holder page

Maintenance Practices

Open and Close Thrust Reverser (PDOS METHOD).

The following is a brief description of these tasks. Refer to the AMM for the full description and the relevant OMSD for the correct use of any specialised tooling.

Close Thrust Reverser after Access

AMM Task B787-A-R78-31-00-20C-740A-A

1. Remove the hold open rod from the bracket on the fan case and place into its stowage position.

Note: The hold-open rod is fully unlocked when a **RED** safety band is seen below the locking collar.

2. Push and hold the thrust reverser PDOS switch until the thrust reverser stops and is in the fully open position.
3. Release the PDOS switch to close the thrust reverser.

Note: Gravity causes the thrust reversers descent. The actuator controls the descent speed of the thrust reverser.

3. Engage the 8 latches in order, as follows:
   a. Close the V-blade latch.
   b. Close the number 1 Latch.
   c. Close C-duct latches 2, 3 and 4.
   d. Close the Core Cowl latch.
   e. Close the Translating sleeve latch.
   f. Close the Bifurcation Latch System (BLS) Handle.
7. Activate the Thrust Reverser after maintenance (AMM Task B787-A-R78-31-00-20G-730B-A).
8. Remove all safety equipment and tools from the work area.

Note: If the PDOS system is unserviceable the thrust reverser cowls can be open and closed manually. Refer to AMM task B787-A-R78-31-00-20D-540A-A.

© Rolls-Royce plc 2018 Use or disclosure is subject to the legend on the Notice to Holder page

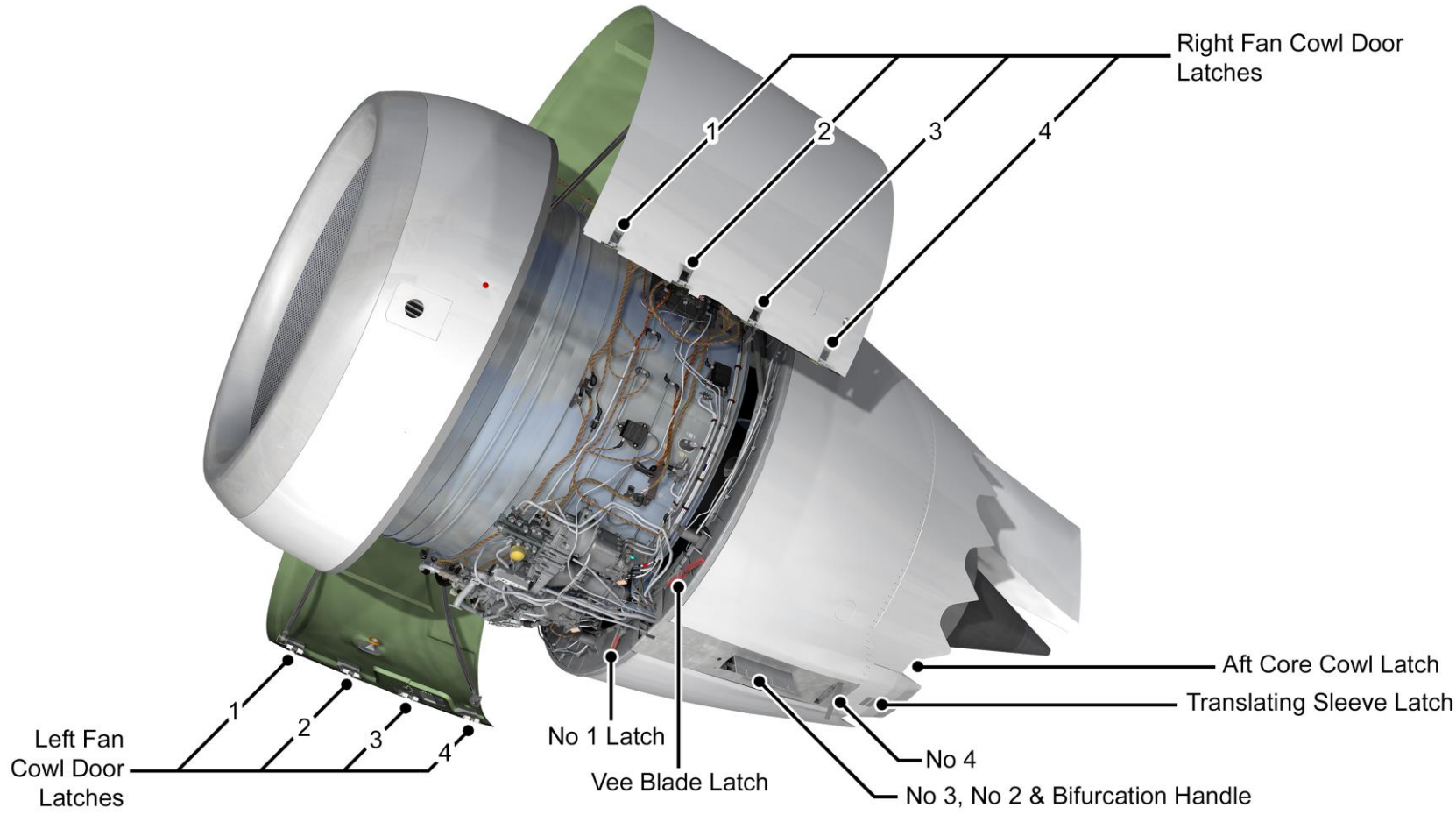

T1000 TEN_LBM_M02_018_01P

CLOSE THRUST REVERSER AFTER ACCESS

© Rolls-Royce plc 2018 Use or disclosure is subject to the legend on the Notice to Holder page

Maintenance Practices

Deploy and Stow of Thrust Reverser for Maintenance

The following is a brief description of these tasks. Refer to the AMM for the full description and the relevant OMSD for the correct use of any specialised tooling.

Deploy the Thrust Reverser (MANUAL METHOD)

NOTE: Both translating sleeves of the Thrust reverser must be deployed at the same time and there must be a minimum number of cascades installed I.A.W the AMM. This is important, as the cascades are part of the thrust reverser structure.

AMM Task B787-A-R78-31-00-23D-950A-A

1. Ensure the Fuel RUN/CUT OFF switch is in the cut-off position.
2. Engine Thrust Levers are to be at idle and a DO-NOT-OPERATE tag attached.
3. Deactivate the Hydraulic Control Unit (HCU).
4. Set the manual bypass function of the HCU and lock in position.
5. Release the thrust reverser track lock and lock in position.
6. Open the Fan Cowl Doors (AMM Task B787-A-R71-11-04-00C-540B-A).
7. Release the locks on the upper and lower hydraulic actuators on the two thrust reverser halves and install the relevant lock out pins.
8. Push in the Manual Drive Unit (MDU) button on the lower actuators to engage the MDUs.
9. Using the correct hexagonal tool turn the MDU to deploy the translating sleeves.

Note: – The clutch in the MDU has a torque limit of 16 (+/-2) Nm (143 +/- 19 in-lb) to prevent damage to the synchronisation shaft.

Stow the Thrust Reverser (MANUAL METHOD)

NOTE: Two persons are re required for this task

AMM Task B787-A-R78-31-00-24D-950A-A

1. Ensure the lock-out pin is installed to the track lock.
2. Ensure the button of both lower actuators' MDU's are pushed in and locked.
3. Ensure the lock out pins are installed to the actuator's locks.
4. Rotate the MDU to stow the translating sleeves taking note of the maximum torque that can be applied
5. Remove the lock-out pin from the track lock.
6. Remove the lock-out pins from the MDU's and push in the buttons.
7. Remove the lockout pins from the upper and lower actuator locks and move the lock release lever to the lock position.
8. Close the manual bypass function of the HCU by pulling the manual bypass button and removing the lock-out pin.

© **Rolls-Royce plc 2018** Use or disclosure is subject to the legend on the Notice to Holder page

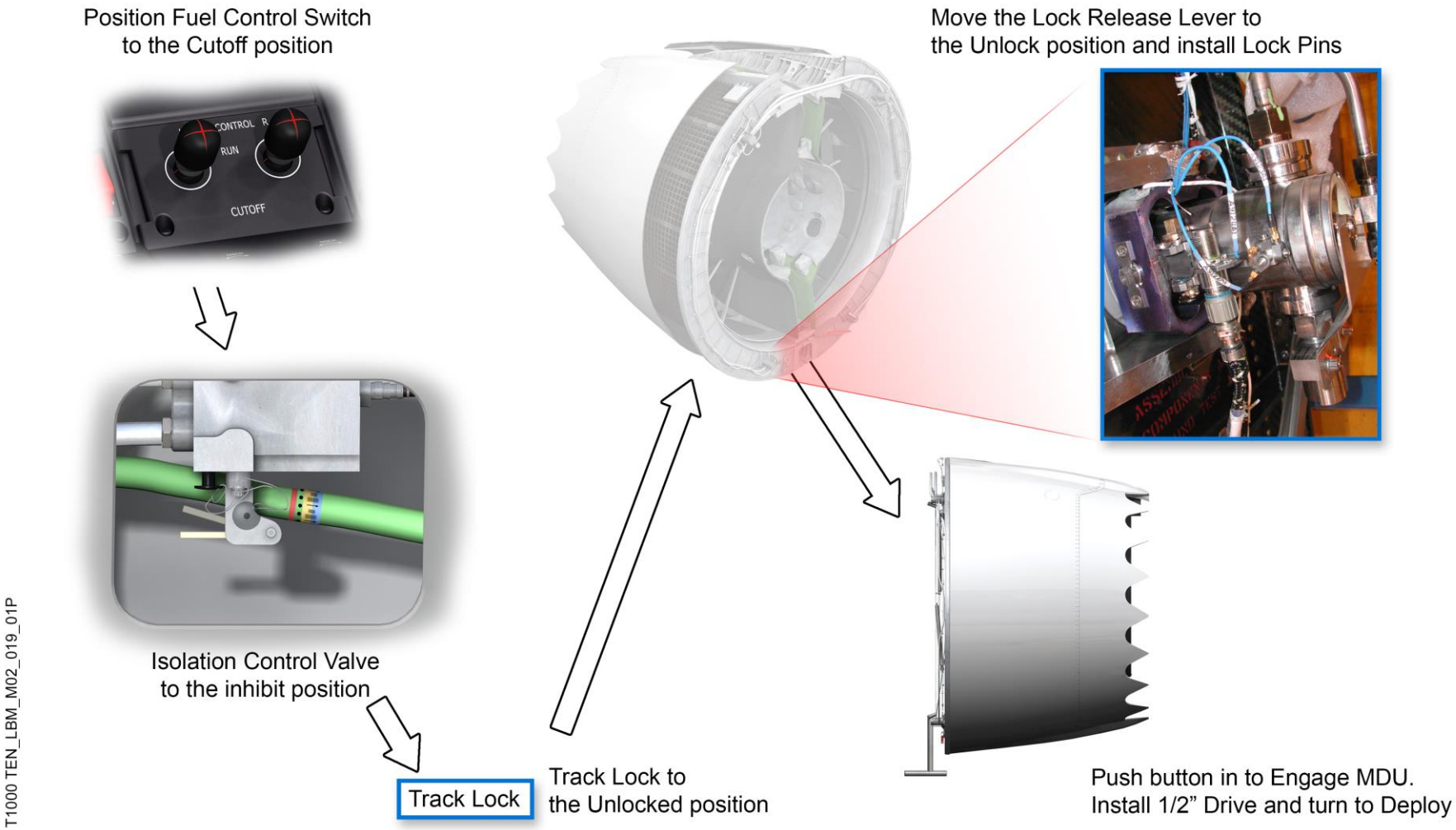

MANUAL DEPLOY AND STOW OF THE THRUST REVERSER

© Rolls-Royce plc 2018 Use or disclosure is subject to the legend on the Notice to Holder page

On Board Maintenance – Ground or Initiated Tests

Introduction

The Initiated tests provide a means by which the maintenance personnel can conduct Engine related tests in a safe and controlled manner. The test called up is to be carried out when directed by the relevant AMM of FIM procedure.

Test Structure

The Central Maintenance Computing Function (CMCF) will generate screens to guide the operator though in the following test steps:

- Test Set-Up (indicate to the operator any necessary warnings, switch selections and instructions required to carry out the test in a safe manor).
- Test In-Progress (Indicates that the test is currently being carried out (operating) – a STOP TEST option is available if required at this point).
- Test Close-Up (switch selections and instructions required to return the system to its original condition).
- Fault Reporting (indicates Passed or Failed condition).

Below is an indication of the Thrust Reverser Test, B787-A-R71-00-00-26B-320A-A, as dictated by a number of tasks Ground or Initiated Tests, together with an explanation of the test capabilities.

Note. See the Troubleshooting section for more details on access and conducting Ground Tests.

© Rolls-Royce plc 2018 Use or disclosure is subject to the legend on the Notice to Holder page

Test Name
EEC SYSTEM TEST CHANNEL A
EEC SYSTEM TEST CHANNEL B
ESS ANTI-ICE SYSTEM
FUEL METERING VALVE SYSTEM CHANNEL A
FUEL METERING VALVE SYSTEM CHANNEL B
FUEL RETURN TO TANK VALVE
HANDLING BLEED VALVE SYSTEMS CHANNEL A
HARNESS CHANNEL A
HARNESS CHANNEL B
IGNITION SYSTEM CHANNEL A
IGNITION SYSTEM CHANNEL B
MODULATED AIR SYSTEM
P20/T20 PROBE HEATER
OIL BYPASS VALVE SYSTEM CHANNEL A
OIL BYPASS VALVE SYSTEM CHANNEL B
OIL DEBRIS MONITORING SYSTEM RESET CHANNEL A
OIL DEBRIS MONITORING SYSTEM RESET CHANNEL B
SECONDARY AIR SYSTEM
TURBINE CASE COOLING ACTUATION SYSTEM
THRUST REVERSER INTERLOCK SOLENOID
VFSG THERMAL BYPASS VALVE
VARIABLE STATOR VANE SYSTEM CHANNEL A
VARIABLE STATOR VANE SYSTEM CHANNEL B
VFSG AOHE AIR CONTROL VALVE SYSTEM CHANNEL A
VFSG AOHE AIR CONTROL VALVE SYSTEM CHANNEL B

The Thrust Reverser Interlock Solenoid Test allows the operator to verify the operation of the Reverse Thrust Lever Interlock Solenoid in the Thrust Control Module located on the flight deck, for fault confirmation or return to service.

T1000 TEN_LBM_M02_020_01P

INITIATED TESTS

© Rolls-Royce plc 2018 Use or disclosure is subject to the legend on the Notice to Holder page

Flight Deck Effects

Introduction

Below is an indication of the associated Flight Deck Effect (FDE) messages for this section (Nacelle) together with the message type (level), an explanation of its meaning, dispatch restrictions (if any) and expected actions taken by flight or ground crew.

Note: This is for your guidance only. Due to the nature of the aircraft and engines continual development these may change and Rolls-Royce cannot guarantee that they are still current and fully accurate. As such, always refer to the appropriate AMM procedure for reference.

© Rolls-Royce plc 2018 Use or disclosure is subject to the legend on the Notice to Holder page

Message	Type	Dispatch	Meaning
ENG REV AIR/GND	Caution	No Dispatch	This is an indication that the Thrust Reverser Control System has lost Thrust Reverser Air/Ground protection to prevent inadvertent deployment in flight.
ENG REV COMMANDED L (R)	Caution	No Dispatch	This is an indication that the Thrust Reverser Angle (TRA) is in the reverse quadrant commanding reverse thrust in flight.
ENG REV LIMITED L (R)	Advisory	Time Limited Dispatch	A fault has been detected on the Engine that either prevents the reverser from deploying or limits reverse thrust to idle when the reverser deploys.
ENG REVERSER L (R)	Advisory	Time Limited Dispatch	Left (right) Engine Thrust Reverser control system fault and airplance below 80 knots.
ENG REVERSER INTERLOCK L (R)	Status	Time Limited Dispatch	Reverse thrust lever interlock failed blocking or interlock failed open.
ENG REVERSER L (R)	Status	Time Limited Dispatch	Engine thrust reverser control system fault.
ENG REVERSER SNSR L (R)	Status	Time Limited Dispatch	One Engine Thrust Reverser locking actuator proximity sensor status is invalid due to an open / short or out of range condition.

T1000 TEN_LBM_M02_021_01

FLIGHT DECK EFFECTS

© Rolls-Royce plc 2018 Use or disclosure is subject to the legend on the Notice to Holder page

Nacelle Reference Wiring Diagrams

Introduction

Below is a wiring schematic of the associated units connected to the EEC. This is only a representation of the actual connectors but all plugs and connectors are indicated with the reference identifiers. This should be used for reference only and not be used as a definitive document. For a more detailed explanation (pins and sockets for troubleshooting purposes etc) and for further details, then always refer to the actual wiring diagrams as given within the AMM or FIM electronic documentation.

© Rolls-Royce plc 2018 Use or disclosure is subject to the legend on the Notice to Holder page

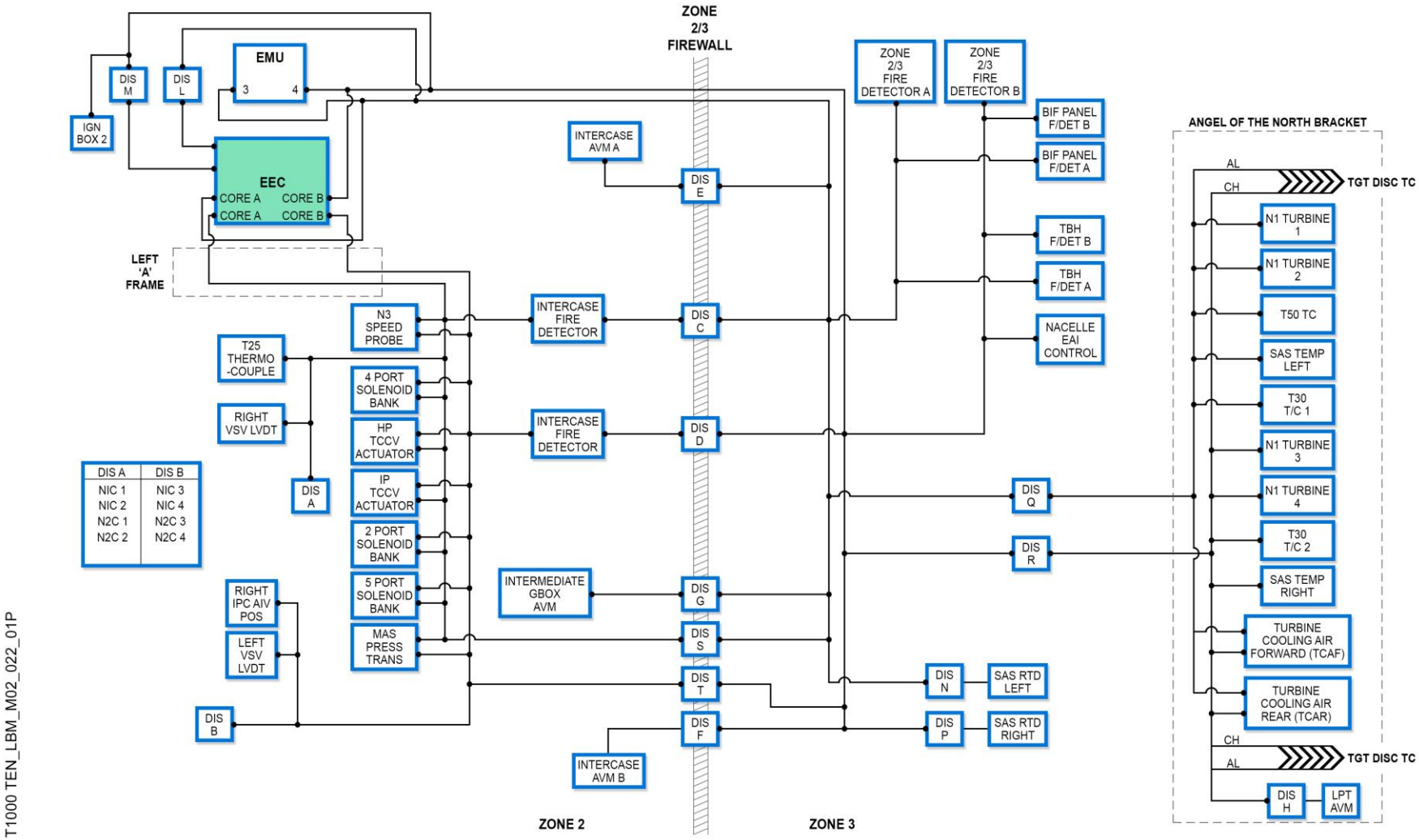

ENGINE WIRING SCHEMATIC

© Rolls-Royce plc 2018 Use or disclosure is subject to the legend on the Notice to Holder page

Nacelle Reference Wiring Diagrams

Introduction

Below is a wiring schematic of the associated units connected to the EEC. This is only a representation of the actual connectors but all plugs and connectors are indicated with the reference identifiers. This should be used for reference only and not be used as a definitive document. For a more detailed explanation (pins and sockets for troubleshooting purposes etc) and for further details, then always refer to the actual wiring diagrams as given within the AMM or FIM electronic documentation.

© Rolls-Royce plc 2018 Use or disclosure is subject to the legend on the Notice to Holder page

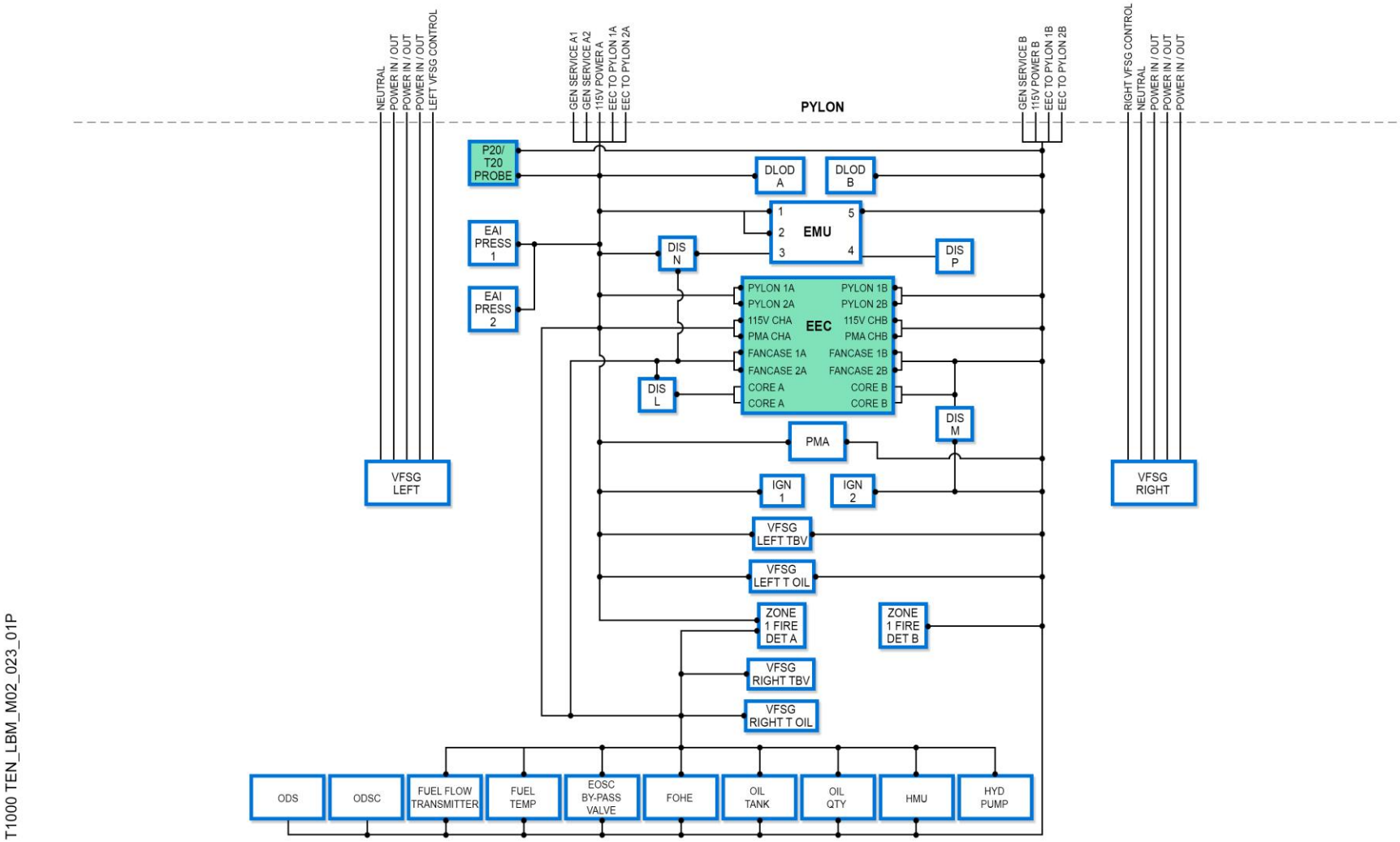

ENGINE WIRING SCHEMATIC

© Rolls-Royce plc 2018 Use or disclosure is subject to the legend on the Notice to Holder page

END OF SECTION

Section 3 - Propulsion System

ATA Chapters Covered:

12, 24, 29, 71 and 80

© Rolls-Royce plc 2018. Use or disclosure is subject to the legend on the Notice to Holder Page

Engine Attachment

Description

The engine is supported on the wing by the aircraft pylon. It is attached to the pylon by a front mount and a rear mount.

The front mount is attached to the top of the Fan Case.

The rear mount is attached to the top of the LP Turbine Exhaust Case.

Thrust links connect between the Intermediate Case and the Rear Mount.

Engine thrust and loads are transmitted to the aircraft through the attachment points.

© Rolls-Royce plc 2018. Use or disclosure is subject to the legend on the Notice to Holder Page

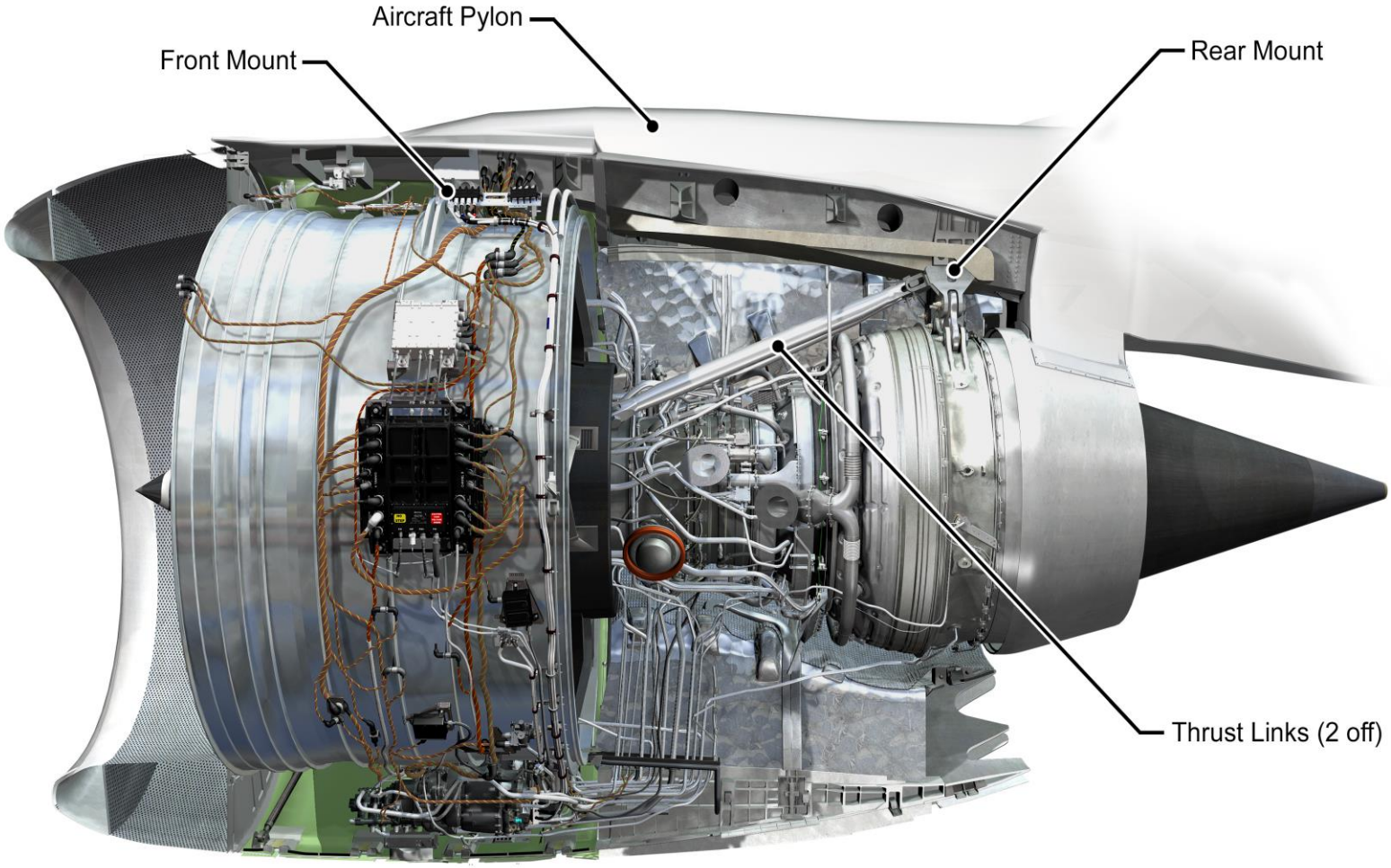

T1000 TEN_LBM_M03_024_01P

ENGINE ATTACHMENT

© Rolls-Royce plc 2018. Use or disclosure is subject to the legend on the Notice to Holder Page

Engine Mounts

Purpose

The purpose of the engine mounts is to support the weight of the engine and transmit loads to the aircraft pylon.

Front Mount

The front mount is located on the top of the rear fan case and is attached to the aircraft pylon with four (4) vertical tension bolts. The mount transmits the following loads:

- Vertical
- Side

Thrust Links

The two thrust links are installed between lugs on the engine intermediate casing and the rear mount. Their purpose is to transmit the thrust developed by the engine to the rear mount.

Rear Mount

The rear mount is located on top of the LP turbine exhaust case and attaches to the aircraft pylon with four (4) vertical tension bolts. The mount transmits the following loads:

- Vertical
- Side
- Torsion
- Thrust

© Rolls-Royce plc 2018. Use or disclosure is subject to the legend on the Notice to Holder Page

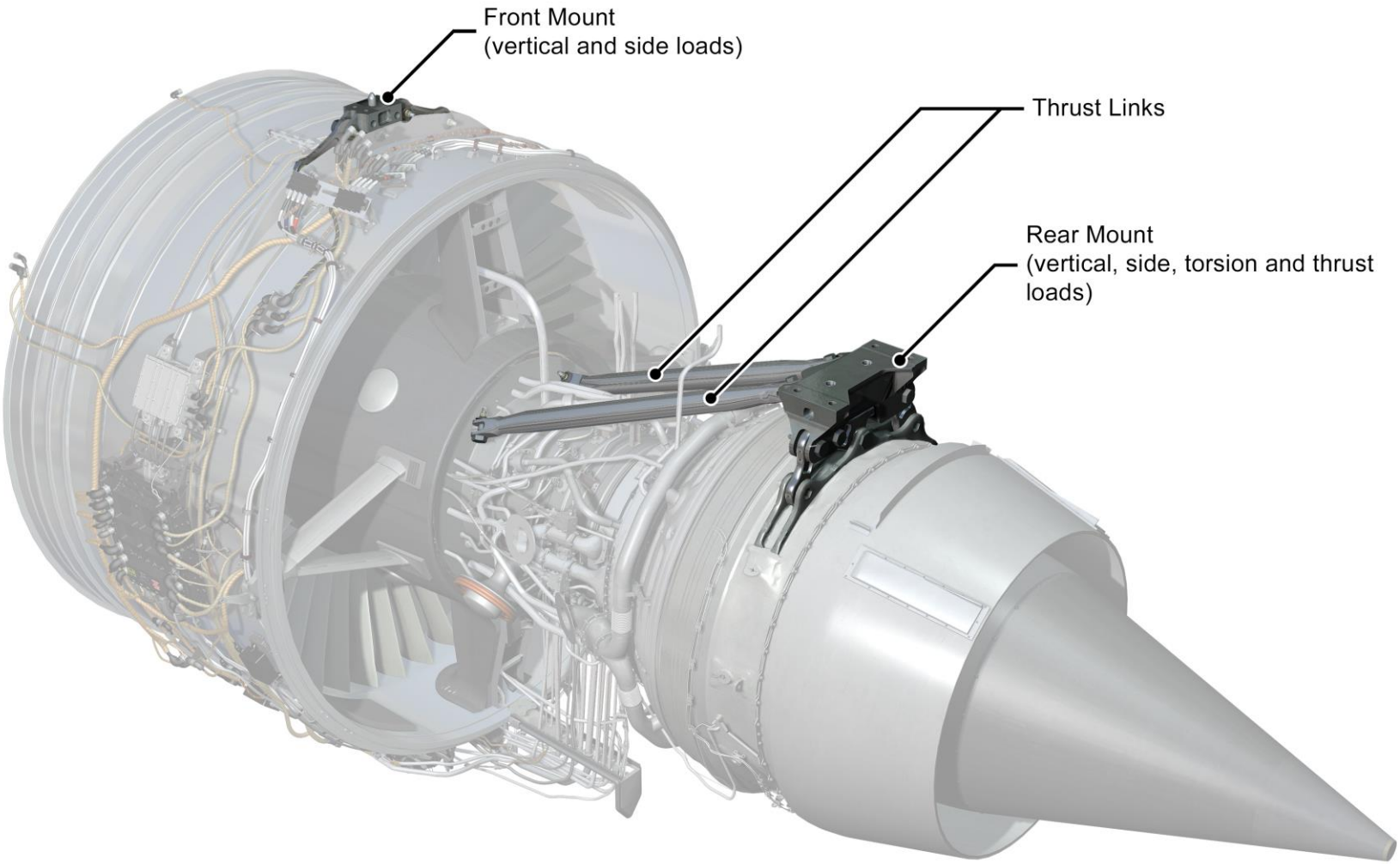

T1000 TEN_LBM_M03_025_01P

ENGINE MOUNTS

© Rolls-Royce plc 2018. Use or disclosure is subject to the legend on the Notice to Holder Page

Powerplant Drains System

Description

The Powerplant drains system is designed to collect and discard fluids from:

- Areas and zones of the Powerplant where fluids would otherwise pool.
- An engine shutdown or failure to start.
- Engine accessories with internal leaks;

The type of drain can be broadly grouped into the following categories:

- Fuel
- Oil
- Hydraulic
- Other

Pylon Drain

Two drain tubes discard fluid that may leak into the pylon area. One is routed over the right (wet) side of the fancase; the other over the left (dry) side of the fancase. They are combined into a single tube at the bottom of the fancase that is connected to the drains mast.

Zone 2 Drains

The area under the engine core fairings is a sealed compartment for fire and ventilation purposes. There are two fuel operated Variable Stator Vane Actuators, plus oil and fuel tubes located within Zone 2.

Fluid leakage in Zone 2 will pool at the lowest point in Zone 2, which is the mid-height shelf, located in the upper half of the lower splitter fairing. A dedicated drain tube connected between the mid-height shelf and the bottom of the Thrust Reverser, via the bifurcation panel, removes any fluid to atmosphere.

Turbine Drain

The turbine case drain is connected between the Tail Bearing Housing (TBH) and an outlet in the Thrust Reverser latch access panel.

Following a failure to start or a wet motor, the turbine case drain removes any residual fuel left in the turbine area and passes it overboard.

© Rolls-Royce plc 2018. Use or disclosure is subject to the legend on the Notice to Holder Page

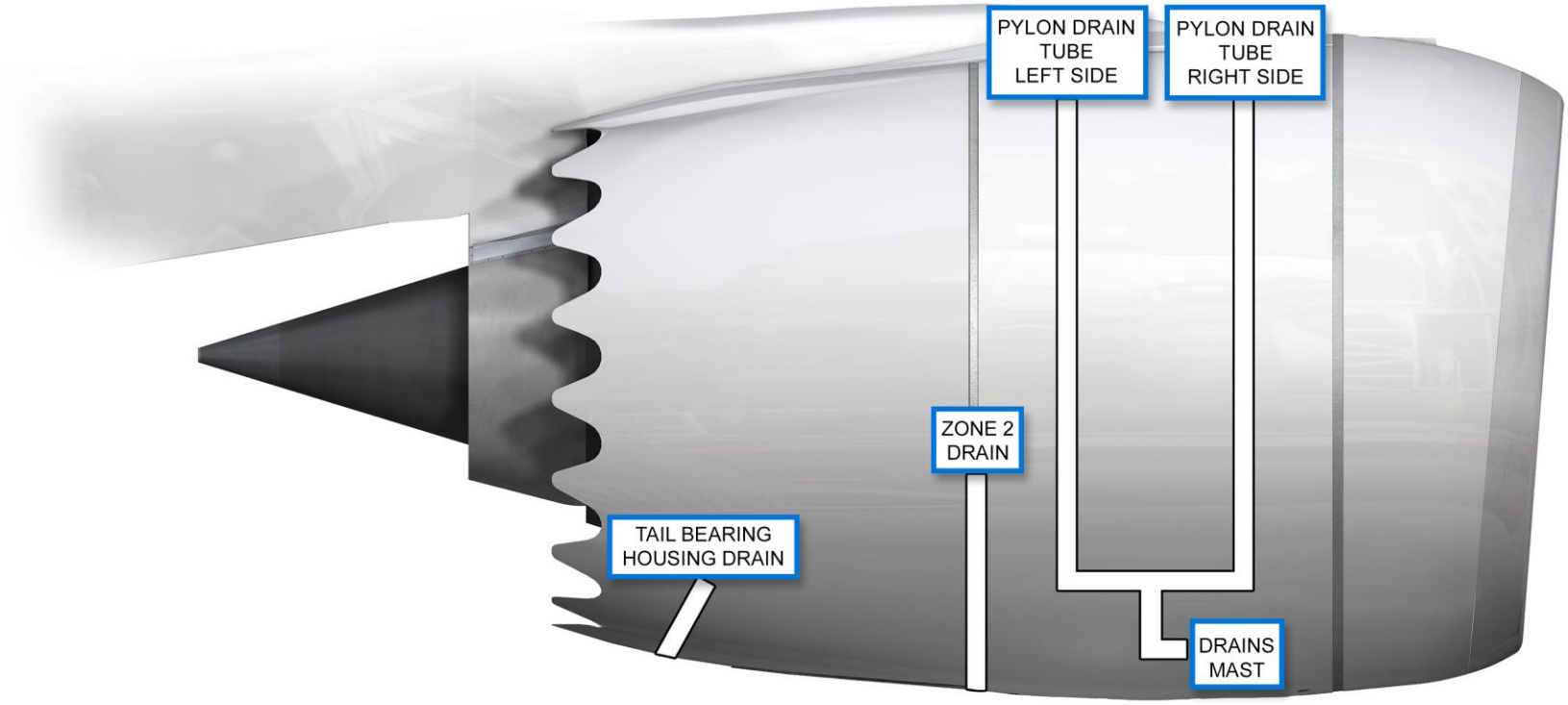

T1000 TEN_LBM_M03_026_01P

POWERPLANT DRAINS SYSTEM

© Rolls-Royce plc 2018. Use or disclosure is subject to the legend on the Notice to Holder Page

Drains Collector Tank & Ejector Pump

Purpose

To collect fuel drained from the fuel manifold after a usual engine shutdown on the ground or after a failure to start and by doing so will prevent the build up of carbon in the fuel spray nozzles and prevent lacquering of the fuel manifold tubes.

Location

The fuel drains collector tank is located on a bracket on the front face of the external gearbox.

Description

The system to remove fuel from the fuel manifold consists of a drains collector tank, to which is bolted a Drains Tank Ejector.

During normal operation, fuel in the drain tank lifts the float valve and moves to the open position. At this point the non-return valve is sprung loaded closed, preventing the flow of fuel out of the tank.

During the engine starting sequence, LP fuel flows from the LP Fuel Pump outlet through the ejector valve whose construction forms a venturi within the body of the valve. The flow of fuel through the ejector venturi lowers the fuel pressure to less than that in the drains collector tank. The pressure within the tank opens the integral non-return valve against its spring. Fuel is then removed from the drains collector tank and routed back to the inlet side of the LP fuel pump.

As the fuel level in the tank decreases the float valve closes the tank outlet to prevent air being introduced into the LP fuel supply.

During engine shutdown on the ground the drains collector tank is filled by fuel drained from the fuel manifold via the dump valve in the HMU. The Fuel Metering Valve (FMV), located in the HMU, operates (but is not mechanically connected to) on the dump valve when the aircraft is on the ground only.

During an engine shutdown the EEC controls the operation of the FMV. During a shutdown on the ground the EEC allows the FMV to open the dump valve. If an in-flight shutdown occurs the EEC will not allow the FMV to operate the dump valve. Thus fuel is not drained from the fuel manifold allowing the fuel to stay in the fuel manifold and the tubes between the HMU and the fuel manifold in readiness for an in-flight start.

As the fuel flows into the collector tank air is released through the outlet tube.

The collector is sized to hold fuel for one normal shutdown and three failed starts. This equates to a capacity of 2.8 litres. It is possible that after more than three consecutive failed starts the tank can become full of drained fuel. In this event fuel is discharged through the outlet tube to the drains mast and dumped overboard.

© Rolls-Royce plc 2018. Use or disclosure is subject to the legend on the Notice to Holder Page

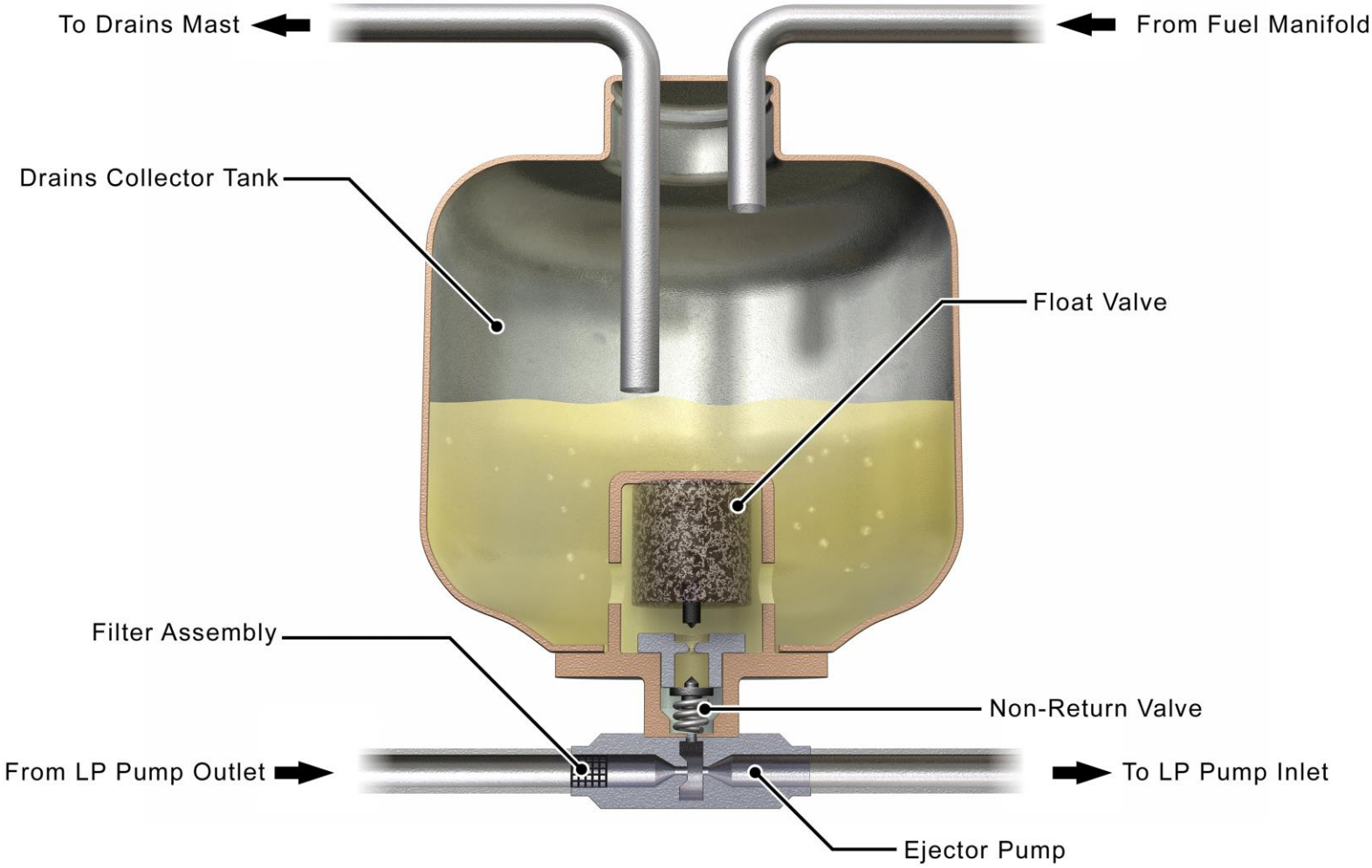

T1000 TEN_LBM_M03_027_01P

DRAINS COLLECTOR TANK AND EJECTOR PUMP

© Rolls-Royce plc 2018. Use or disclosure is subject to the legend on the Notice to Holder Page

Accessory Drains System

Purpose

Remove unwanted fluids from a leaking LRU or area of the engine to the drains mast where the fluid will flow overboard.

Location

The drains system is located on the lower half of the LP Compressor Case and in the Fire Zone 2.

Description

The accessory drains system consists of a number of tubes connected to different LRUs and a drains mast. Drains are considered to be either “dry” or “wet.”

A “dry” drain is a drain where fluid is not expected to have any fluid flowing from, where as a “wet” drain is a drain where fluid may flow from as part of the system operation or from maintenance of the engine.

Dry Drains

The following are considered to be “dry” drains:

- Fuel pump / Gearbox Cavity – Fuel or Engine oil
- Variable Stator Vane Actuators 1 & 2 and IP/HP ATCC Actuators - Fuel
- Variable Frequency Starter Generator (VFSG) 1 & 2 mounting pads – Engine oil
- Hydraulic Pump Gearbox Pad – Hydraulic fluid or Engine oil
- Hydraulic Pump – Hydraulic Fluid

Wet Drains

The following are considered to be “wet” drains:

- Drains Tank / Oil Tank Scupper – Fuel or Engine Oil

Leakage Identification

To identify the source of a leak bottles are installed to check and measure the fluid in the tube by using a tool that attaches to the drains mast. The tool has a number of bottles attached, which align with the holes on the drains mast.

© Rolls-Royce plc 2018. Use or disclosure is subject to the legend on the Notice to Holder Page

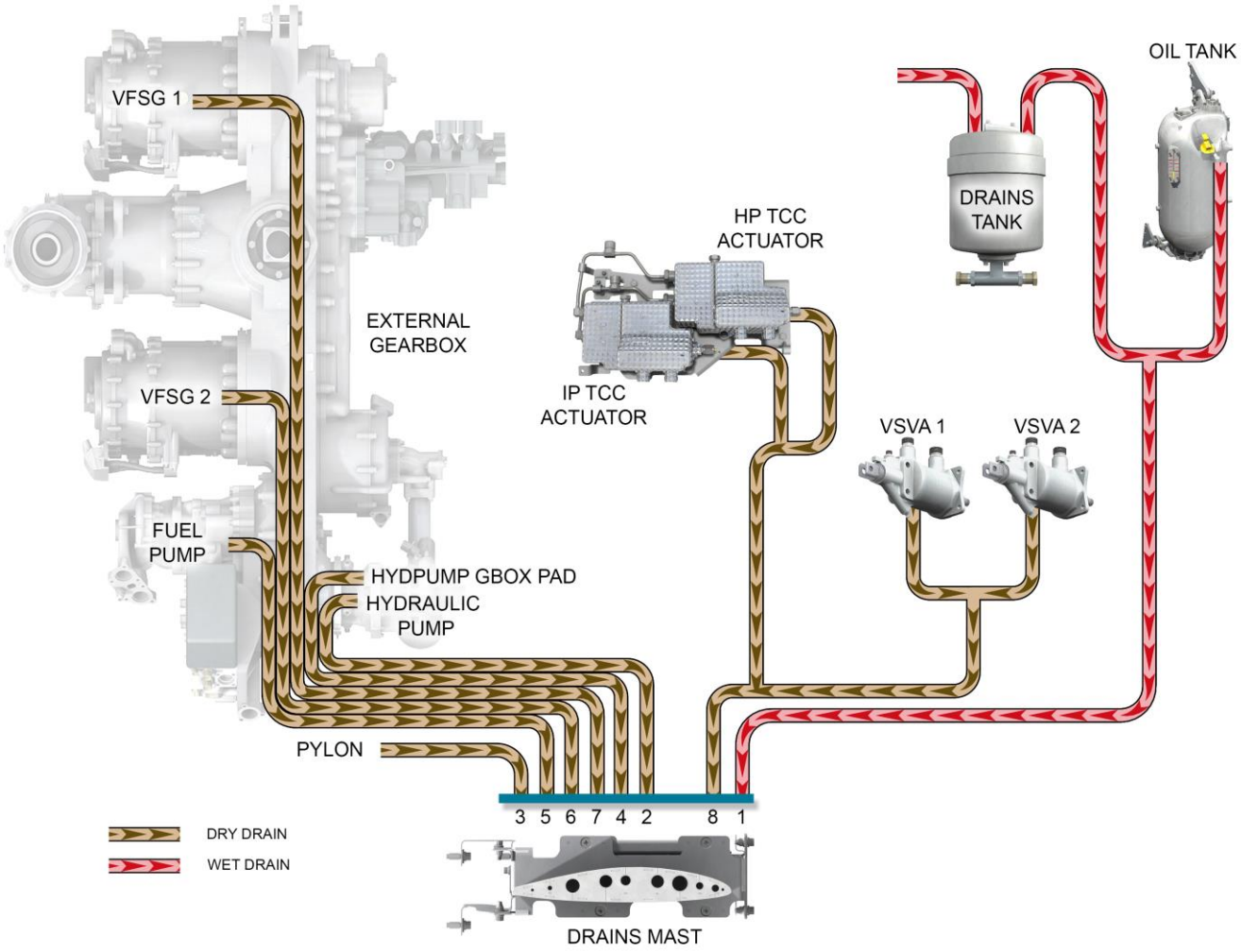

T1000 TEN_LBM_M03_028_01P

ACCESSORY DRAINS SYSTEM

© Rolls-Royce plc 2018. Use or disclosure is subject to the legend on the Notice to Holder Page

Drains Mast

Purpose

The purpose of the drains mast is to provide a means of depositing excess fluid overboard that may accumulate on or around the engine.

Location

The drains mast is located on the split line between the two fan cowl doors, attached to a bracket on the forward face of the external gearbox.

Description

There are 10 outlets within the drains mast with eight drain lines connected to the drains mast. The remaining two are blanked.

Each outlet port on the drains mast is identified with the source of any fluid that may be present.

© Rolls-Royce plc 2018. Use or disclosure is subject to the legend on the Notice to Holder Page

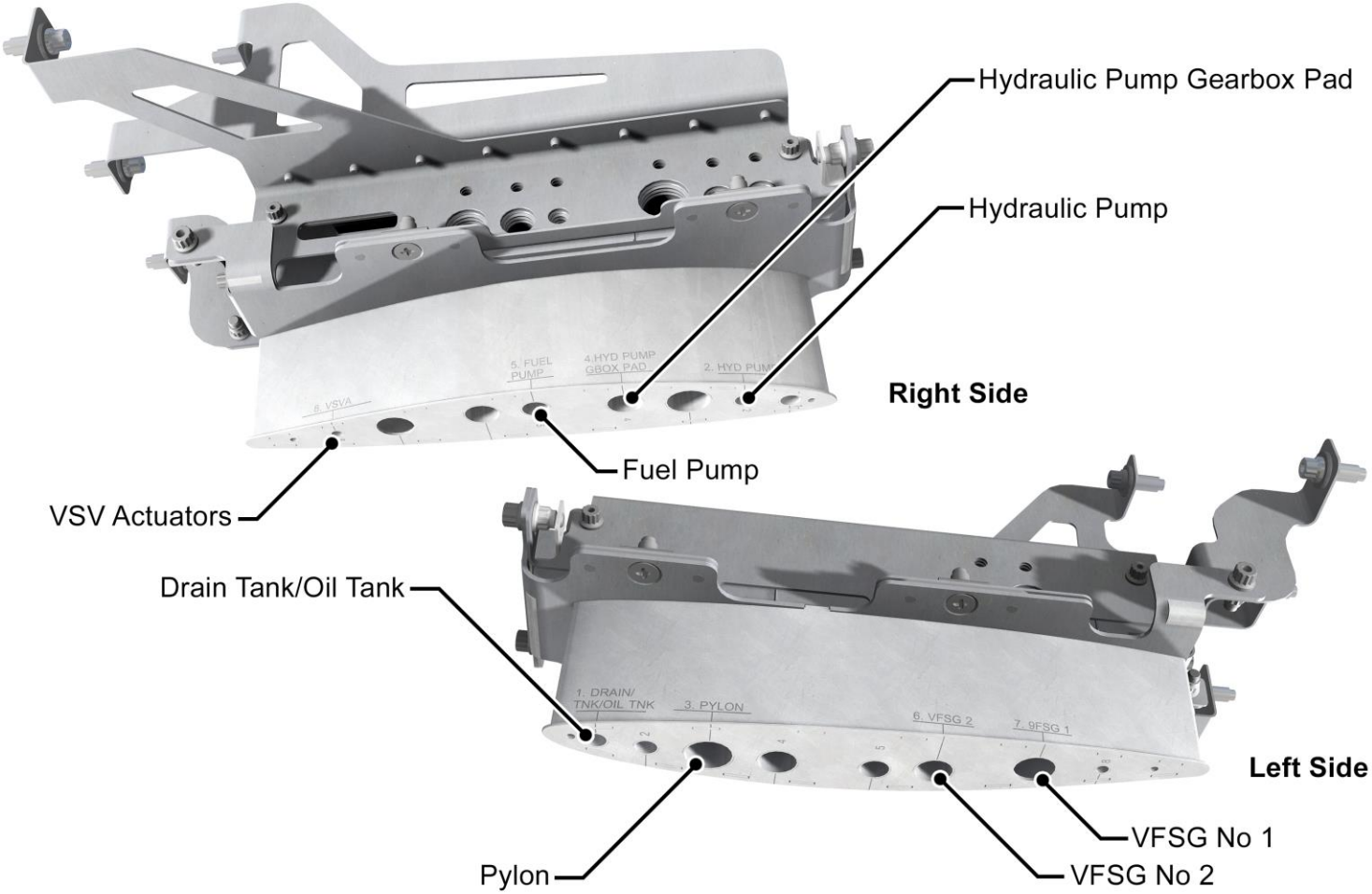

T1000 TEN_LBM_M03_029_01P

DRAINS MAST

© Rolls-Royce plc 2018. Use or disclosure is subject to the legend on the Notice to Holder Page

Centrifugal Breather Outlet

Introduction

During engine running un-wanted air is produced in the oil system that must be separated from the oil and discharged overboard.

Location

The centrifugal breather outlet is located on the front face of the centrifugal breather housing.

Purpose

The centrifugal breather outlet tube provides a means to discharge overboard the air separated from the oil system by the centrifugal breather.

Description

The centrifugal breather outlet tube is connected between the centrifugal breather and the external breather mast located on the outside surface of the right hand fan cowl door.

The centrifugal breather also incorporates the location where the IP system can be manually rotated during maintenance.

© Rolls-Royce plc 2018. Use or disclosure is subject to the legend on the Notice to Holder Page

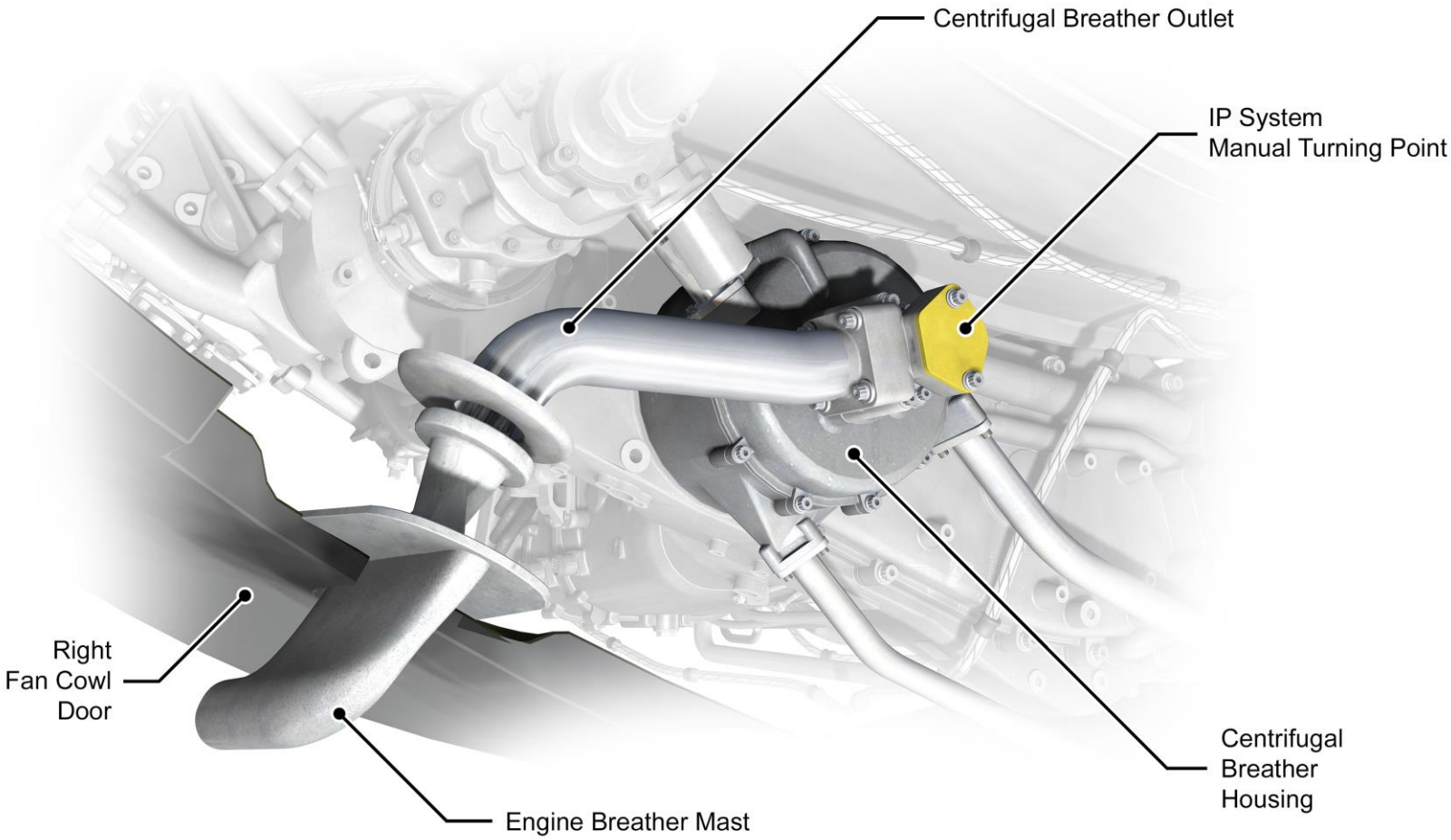

T1000 TEN_LBM_M03_030_01P

CENTRIFUGAL BREATHER OUTLET

© Rolls-Royce plc 2018. Use or disclosure is subject to the legend on the Notice to Holder Page

Hydraulic Pump Assembly

Introduction

The flight surfaces, thrust reversers and landing gear are all operated by hydraulic power. There are three hydraulic systems on the aircraft to provide redundancy to the area of operation. The Engine Driven Pump (EDP), or Hydraulic Pump, provides pressurised fluid to the two of these systems.

Purpose

The Engine Driven Pump (EDP) is the primary pump for the aircraft left (red) and right (green) hydraulic systems.

Location

Front face of the main gearbox on the right side of each engine.

Description

The hydraulic pump is an axial piston, variable displacement pump assembly. An internal pressure compensator controls the output pressure of the pump to approximately 5000 psi. The rated speed of the hydraulic pump is 6800 rpm at which it delivers a maximum of 25 gpm.

A depressurisation solenoid valve blocks the pump output flow when the pump is selected off.

A case drain hydraulic flow cools and lubricates the hydraulic pump during usual operation and a seal drain provides a route to the drains mast should the pump itself begin to leak.

A ripple damper located on the right side of the fancase smoothes the pump pressure output.

Functional Description

The external gearbox drives the hydraulic pump when the engine is operating. Pump pressure is fed to the hydraulic system when the de-pressurisation solenoid valve is not energised.

When the de-pressurisation solenoid valve is energised pressurised hydraulic fluid from the pump output line moves the blocking valve, removing the pressure from the pump.

Access to the hydraulic pump is gained by opening the right fan cowl.

© Rolls-Royce plc 2018. Use or disclosure is subject to the legend on the Notice to Holder Page

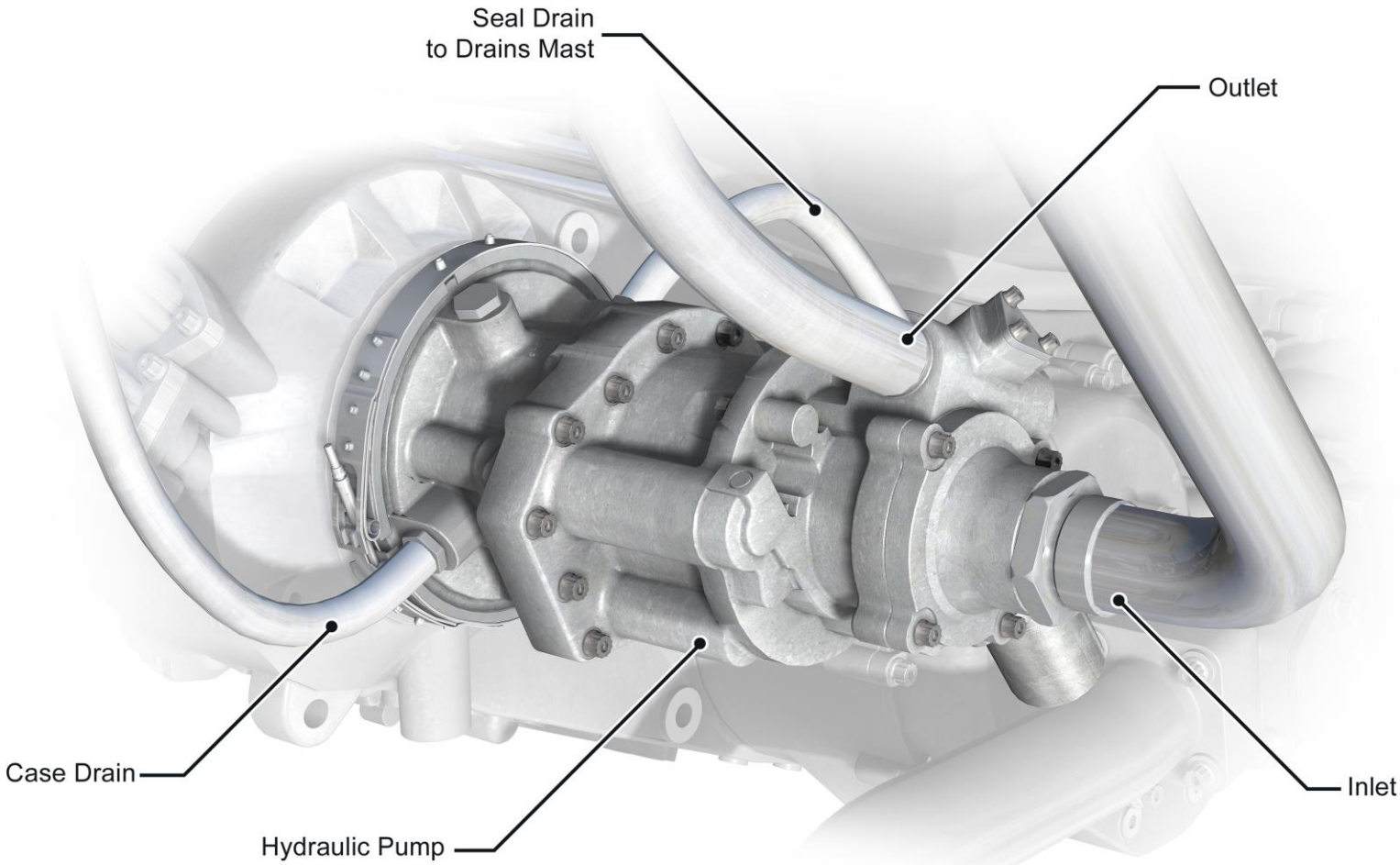

T1000 TEN_LBM_M03_031_01P

HYDRAULIC PUMP ASSEMBLY

© Rolls-Royce plc 2018. Use or disclosure is subject to the legend on the Notice to Holder Page

Variable Frequency Starter Generator – VFSG

Purpose

The VFSG has a dual role of acting as a starter motor to provide power to start the engine and as a generator to supply aircraft electrical power.

Location

There are two VFSGs per engine mounted on the rear face of the external gearbox each side of the Lower Bevel Box. They are identified as VFSG 1 on the left and VFSG 2 on the right as viewed from the rear.

Description

Each VFSG is driven directly by, or drives, the external gearbox with no speed control devices. In start mode each VFSG is controlled by a dual role Common Motor Starter Controller (CMSC) located in the aft EE Bay. In generate mode a Generator Control Unit (GCU) in the forward EE Bay controls the output of the VFSGs.

The output power frequency range is 360 to 800Hz.

In start mode each VFSG is rated to supply 300ft-lbs of torque to the external gearbox. The Bus Power Control Unit (BPCU) informs the CMSC that a Main Engine Start (MES) mode is required via the Common Data Network (CDN). The CMSC will then configure itself whilst also verifying the Circuit Breaker (CB) configuration. At the beginning of the start cycle the CMSC will provide a 100% torque command to the VFSG.

Once the ECC has completed its power up checks (6% N2) the EEC will provide the CMSC with the torque command via the CDN as a percentage of the maximum torque (300ft lbs) for the remainder of the start sequence. Therefore the torque to the engine from the VFSG is dependant on power available to the CMSC and the torque command from the EEC.

Once the engine has started the CMSC reconfigures itself and informs the BPCU via the CDN that the Main Engine Start is complete. At this point the CMSC will become a motor controller to control the various electric motors to which it is allocated.

Power to the aircraft relies on the serviceability of the APU and the number of external power supplies used. For usual operation the APU is the primary source of electrical power.

If the APU is not serviceable then a minimum of two (2) out of a possible three (3) external 90 KVA power supplies will be required.

In generate mode each VFSG is rated at 250kVA and supplies power to its respective 235V AC bus for distribution to the high voltage +/- 270V DC, 115V AC and 28V DC buses.

© Rolls-Royce plc 2018. Use or disclosure is subject to the legend on the Notice to Holder Page

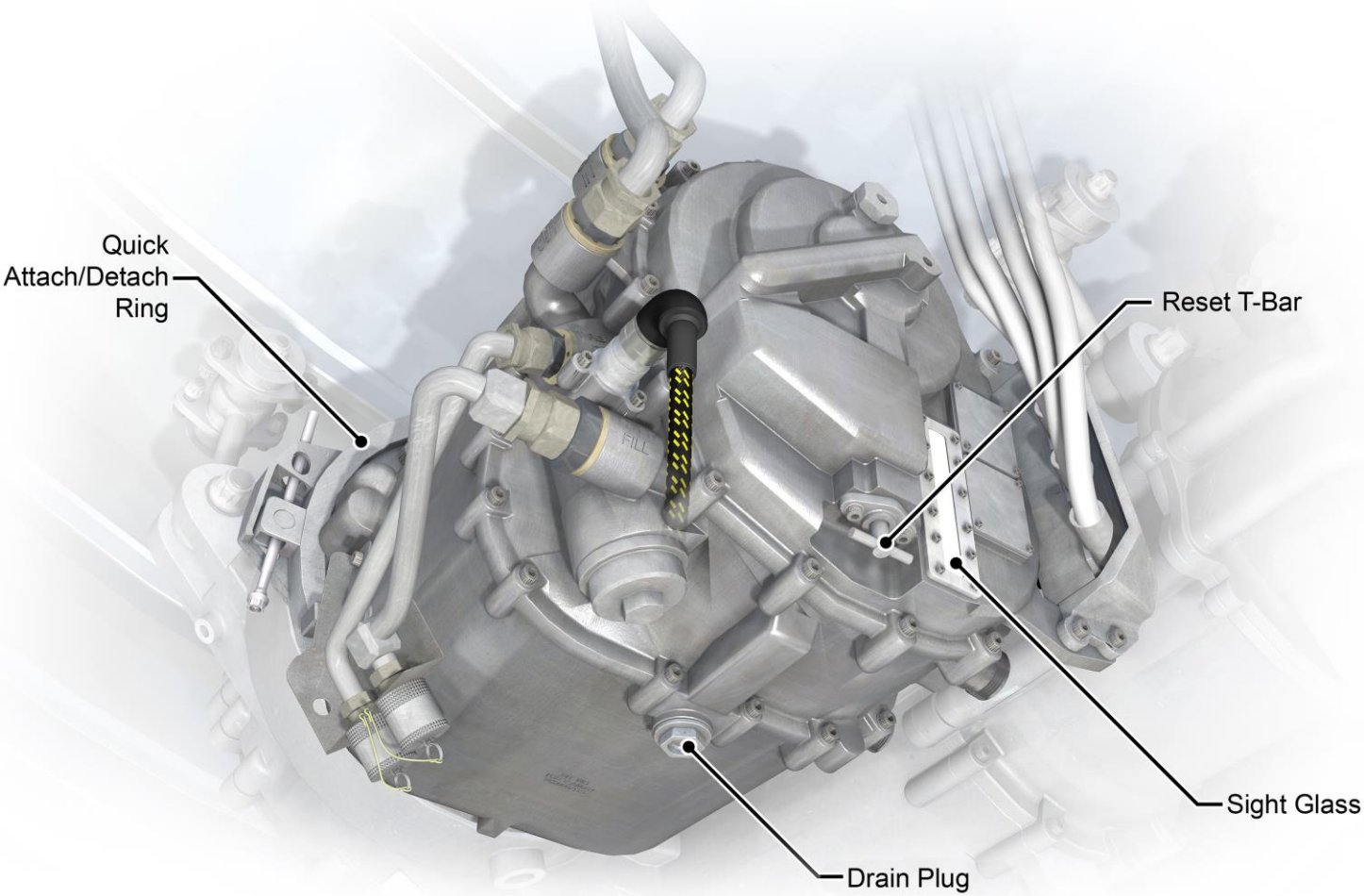

T1000 TEN_LBM_M03_032_01P

VARIABLE FREQUENCY STARTER GENERATOR - VFSG

© Rolls-Royce plc 2018. Use or disclosure is subject to the legend on the Notice to Holder Page

Variable Frequency Starter Generator – VFSG

Description - continued

Each VFSG is attached to the gearbox by a Quick Attach/Detach (QAD) assembly and has an integral oil system that is separate from the engine oil system.

An oil pump built into the VFSG pumps the oil around the VFSG cooling circuit. Other components that form part of the VFSG include:

- Oil Filter
- Scavenge pressure relief valve.
- Remote Oil level sensor.
- Oil-in and Oil-out ports.
- Low oil pressure switch.
- Oil sight glass.
- Pressure fill and overflow ports.
- Electronic Magnet Chip Detector.
- Reset ‘T’ Bar.

In flight if the VFSG oil pressure becomes low the VFSG drive can be disconnected manually via a pushbutton on the overhead panel. On the ground this may only occur when N2<80%.

The VFSG may also be disconnected automatically if there is a thermal disconnect. A thermal disconnect occurs when the VFSG oil temperature exceeds 199 deg C (390 deg F).

If manually disconnected the VFSG drive can be re-connected using the Reset ‘T’ Bar. If automatically disconnected via the thermal disconnect, the Reset ‘T’ Bar cannot be used.

© Rolls-Royce plc 2018. Use or disclosure is subject to the legend on the Notice to Holder Page

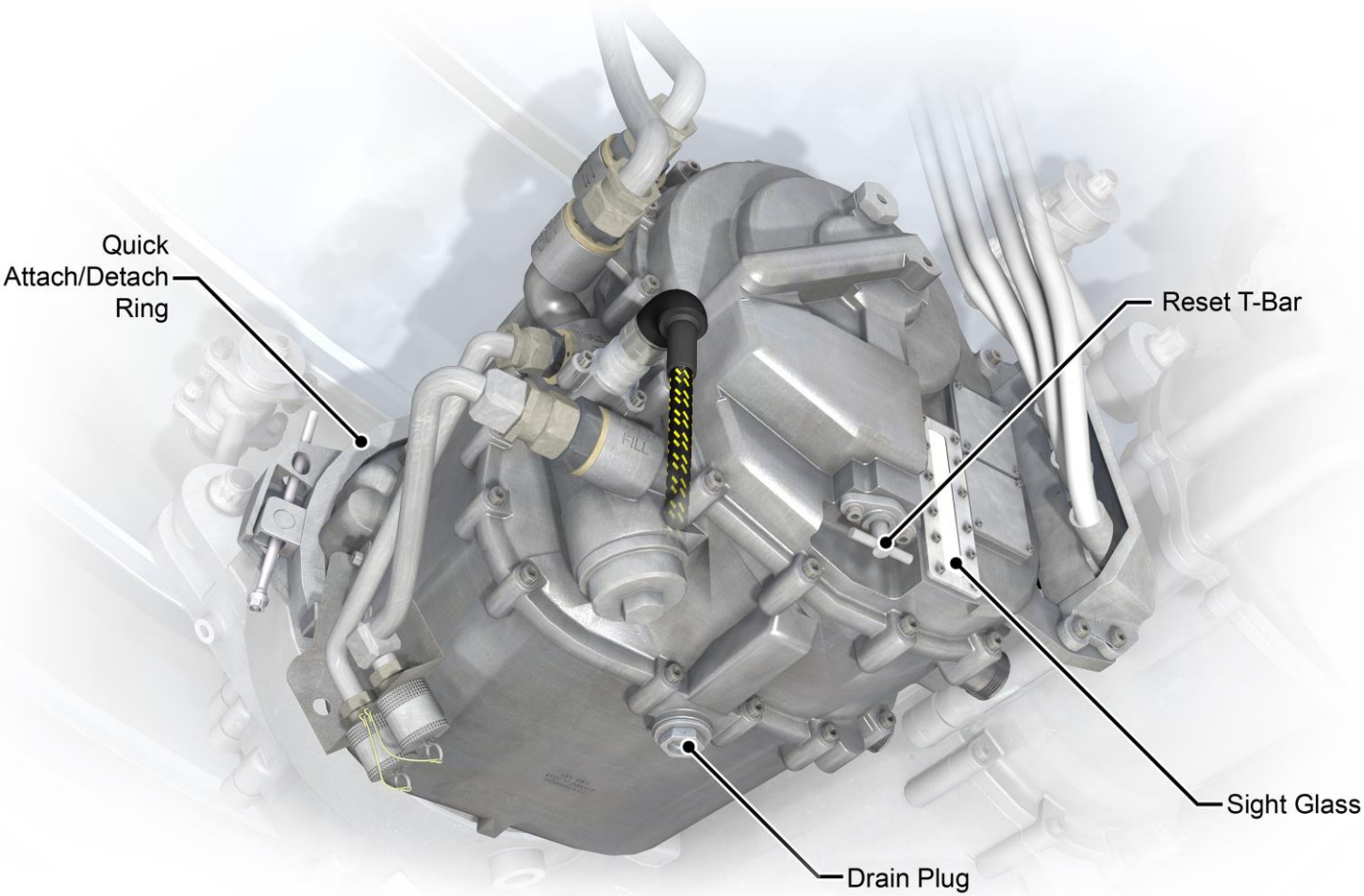

T1000 TEN_LBM_M03_032_01P

VARIABLE FREQUENCY STARTER GENERATOR - VFSG

© Rolls-Royce plc 2018. Use or disclosure is subject to the legend on the Notice to Holder Page

VFSG Oil Cooling System

Purpose

Each Variable Frequency Starter Generator (VFSG) has its own independent cooling system to keep the oil temperature of the VFSG within acceptable limits.

Location

The cooling system for the VFSG is located on the lower left and lower right side of the LP Compressor Case (Fancase).

Description

The VFSG oil system is cooled using engine fan air and an external cooling circuit that is independent from the engine oil system. Each VFSG cooling circuit includes a Thermal Bypass Valve (TBV) and a Surface Air Oil Heat Exchanger (SAOHE).

The SAOHE's are the only means for cooling the VFSG oil when the engine is running.

Operation

Thermal By-Pass Valve (TBV)

The EEC channel in control operates the TBV via a dual channel solenoid. The valve also incorporates a dual channel LVDT whose function is to feedback the position of the valve to the EEC.

The valve is spring loaded to the closed position and is opened when the solenoid becomes energised.

Each VFSG cooling circuit has a dual channel Resistive Temperature Device (RTD) which provides an indication of VFSG oil temperature to the EEC via the CDN. As the oil temperature in the VFSG system increases (>85 deg C) the EEC will de-energise the TBV solenoid and the valve will close. In the closed position oil is directed through the SAOHE, thereby cooling the oil.

As the oil temperature in the VFSG system decreases (<45 deg C) the EEC will energise the TBV solenoid and the valve will open. In the open position oil is directed through the valve, bypassing the SAOHE.

Surface Air Oil Heat Exchanger (SAOHE)

The two SAOHEs are mounted in individual recesses to the inner surface of the fancase. The unit has fins on the outer surface that allows heat from the oil to dissipate into the fan air whenever the engine is running.

A de-congealing valve within the SAOHE allows oil to bypass the SAOHE matrix in the event of a blockage and during cold starting to improve the SAACOC de-congealing performance.

© Rolls-Royce plc 2018. Use or disclosure is subject to the legend on the Notice to Holder Page

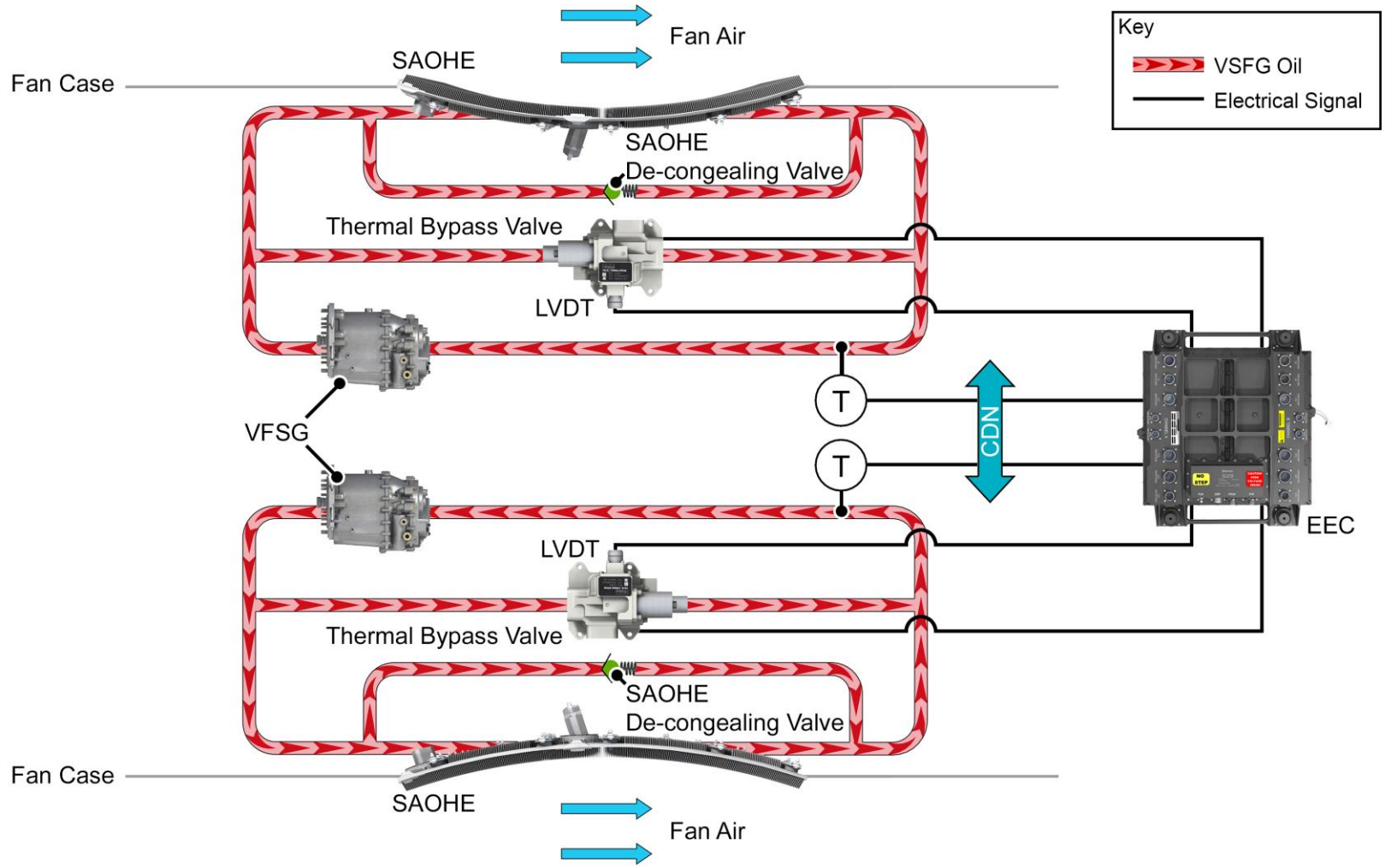

T1000 TEN_LBM_M03_033_02P

VFSG COOLING SYSTEM

© Rolls-Royce plc 2018. Use or disclosure is subject to the legend on the Notice to Holder Page

VFSG Cooling System Components

VFSG Surface Air Oil Heat Exchanger (SAOHE) and Thermal By-Pass Valve (TBV).

VFSG Surface Air Oil Heat Exchanger (SAOHE)

The SAOHE's are mounted in recesses to the inner surface of the fancase between the 3 and 9'oclock position. Each unit has fins on the outer surface that encroach into the LP Compressor Bypass air stream to allow heat from the oil to dissipate into the fan air whenever the engine is running.

A de-congealing valve within the SAOHE allows oil to bypass the SAOHE matrix in the event of a blockage and during cold starting to improve SAOHE de-congealing performance.

Thermal By-Pass Valve (TBV)

The TBVs are located on the external surface of the LP Compressor Case at the 4 and 8 o'clock positions (aft looking forward).

© Rolls-Royce plc 2018. Use or disclosure is subject to the legend on the Notice to Holder Page

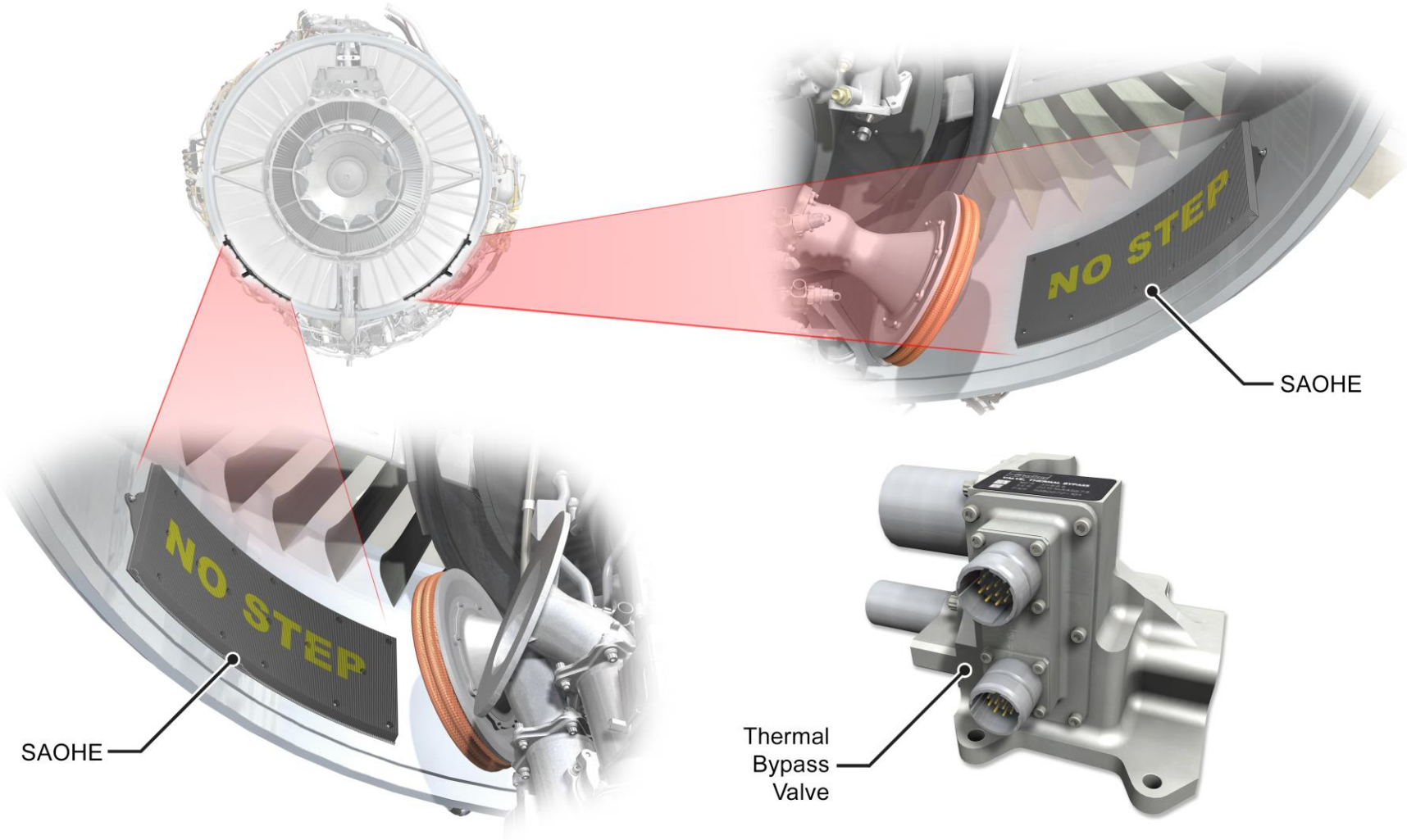

T1000 TEN_LBM_M03_034_01P

VFSG COOLING SYSTEM COMPONENTS

© Rolls-Royce plc 2018. Use or disclosure is subject to the legend on the Notice to Holder Page

Maintenance Practices

VFSG Removal and Installation

The following is a brief description of these tasks. Refer to the AMM for the full description and the relevant OMSD for the correct use of any specialised tooling.

VFSG REMOVAL

AMM Task B787-A-24-21-09-00C-520A-A

There are two (2) VFSG's installed on the external gearbox, each weighs 205 lb (93 Kg) when there is no oil in the VFSG.

1. Prepare the aircraft i.e. retract and deactivate the leading edge slats, deactivate the thrust reverser, open the fan cowls for access and open the thrust reverser C Ducts for access. Remove Electrical Power and placard the flight deck as required.
2. Release the VFSG Oil Pressure (B787-A-24-11-00-00D-228A-A).

WARNING: DO NOT OPEN THE OIL SYSTEM UNTIL THE PRESSURE GOES TO ZERO. THE PRESSURE GOES TO ZERO APPROXIMATELY 5 MINUTES AFTER AN ENGINE STOPS. A PRESSURISED OIL SYSTEM CAN RELEASE A SPRAY OF HOT OIL THAT CAN BURN YOU.

3. Install the mounting plate and VFSG adaptor adjuster to the trolley jack.
4. Drain the VFSG oil into a clean oil resistant 5 gal (19 litre) container and discard the drain plug seal ring.
5. Remove the pressure fill and over-fill tubes and unions. Discard all seal rings and remove the mount plate.

CAUTION: USE TWO (2) WRENCHES TO LOOSEN ALL OIL LINES. OBEY THE TWO WRENCH PROCEDURE TO PREVENT TOO MUCH TORQUE ON THE FITTINGS. TOO MUCH TORQUE CAN CAUSE DAMAGE TO THE FITTINGS.

6. Remove the oil-in and oil-out tubes from the VFSG and discard any seal rings.
7. Ensure the applicable CB has been opened. Disconnect the electrical connectors from the VFSG and remove the power feeder cables from the VFSG.
8. Place the trolley jack and VFSG adaptor beneath the VFSG.
9. Raise the trolley jack and attach the adaptor to the VFSG.

WARNING: GET SUFFICIENT AID FROM PERSONS AND EQUIPMENT TO HOLD THE COMPONENT DURING REMOVAL AND INSTALLATION. THIS COMPONENT WEIGHS APPROXIMATELY 200 LBS (90.8 KG). THIS WILL PREVENT INJURY TO PERSONS AND DAMAGE EQUIPMENT.

10. Remove the lockwire and release the QAD tension bolt until the alignment marks on the QAD coupling and VFSG housing align with each other.
11. Keep the alignment marks aligned and move the trolley jack rearwards to remove the VFSG from the external gearbox.
12. Discard the VFSG input shaft seal ring. Fit protection blanks to the VFSG and external gearbox as required.

© Rolls-Royce plc 2018. Use or disclosure is subject to the legend on the Notice to Holder Page

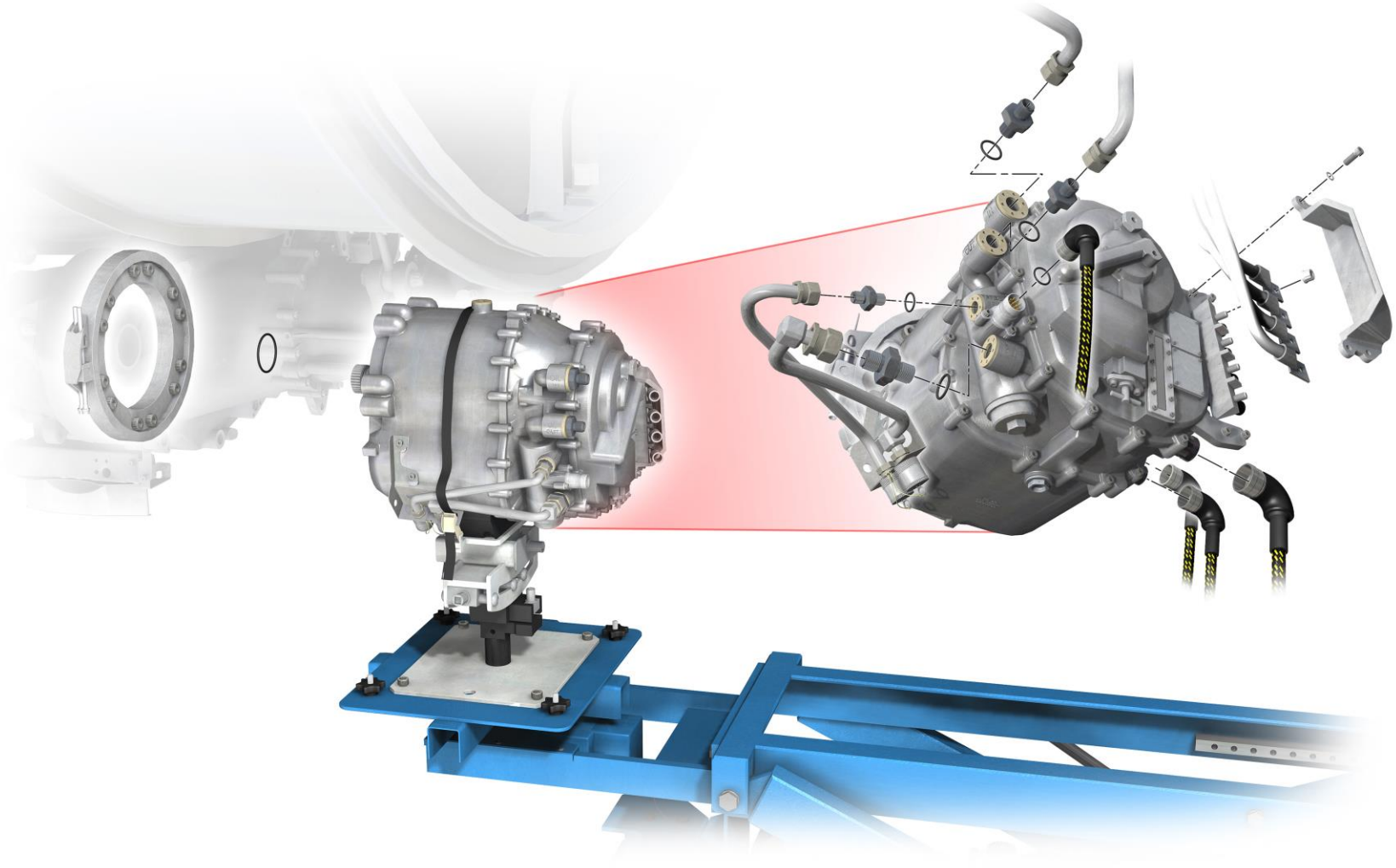

T1000 TEN_LBM_M03_036_01P

VFSG REMOVAL

© Rolls-Royce plc 2018. Use or disclosure is subject to the legend on the Notice to Holder Page

Maintenance Practices

VFSG Removal and Installation

The following is a brief description of these tasks. Refer to the AMM for the full description and the relevant OMSD for the correct use of any specialised tooling.

VFSG INSTALLATION

AMM Task B787-A-24-21-09-00C-720A-A

1. Clean the VFSG and the VFSG input shaft.
2. Inspect the VFSG QAD Coupling (B787-A-24-21-03-00A-280A-A).
3. Apply a thin layer of Royco HF-825 to the QAD coupling lugs, tension bolt, input shaft seal ring, VFSG input shaft and the external gearbox input-spline.
4. Install a new VFSG Input shaft seal ring onto the VFSG input shaft.
5. Install the VFSG adaptor onto the trolley jack if not already done and install the VFSG onto the VFSG adaptor.
6. Align the QAD coupling ring with the mark on the QAD coupling ring adaptor plate.

NOTE: The VFSG cannot be installed unless the QAD coupling marks are aligned. When in this position the QAD coupling is in the fully open position.

7. Move the trolley jack forward and raise the trolley jack until the VFSG is approximately aligned with the external gearbox mount pad.
8. Use the VFSG adaptor to adjust the VFSG position in relation to the external gearbox input-spline (an optional spline adapter alignment assembly may be used).
9. Move the trolley jack forward to install the VFSG onto the external gearbox mount pad. DO NOT LET THE WEIGHT OF THE VFSG HANG ON THE VFSG INPUT SHAFT.
10. Engage the QAD coupling ensuring that it moves smoothly and freely.
11. Install the QAD coupling tension bolt into the QAD coupling ring adaptor.
12. Tighten the QAD coupling tension bolt I.A.W the AMM Task B787-A-24-21-03-01B-340A-A.
13. Remove the VFSG adaptor from the VFSG and lower the trolley jack.
14. Safety the QAD coupling tension bolt with lockwire.
15. Inspect the power feeder cables (B787-A-24-21-05-00C-280A-A)
16. Connect the VFSG power feeder cables.
17. Connect the VFSG electrical connectors.
18. Install the VFSG oil-in; oil-out, pressure fill, over-fill drain tubes and mounting plates ensuring new seal rings are used as required.
19. Replenish the VFSG (B787-A-12-13-03-00C-218A-A).
20. Carry out a VFSG oil static leak test (B787-A-24-11-00-01A-364A-A).
21. Return the aircraft to its usual condition.

© Rolls-Royce plc 2018. Use or disclosure is subject to the legend on the Notice to Holder Page

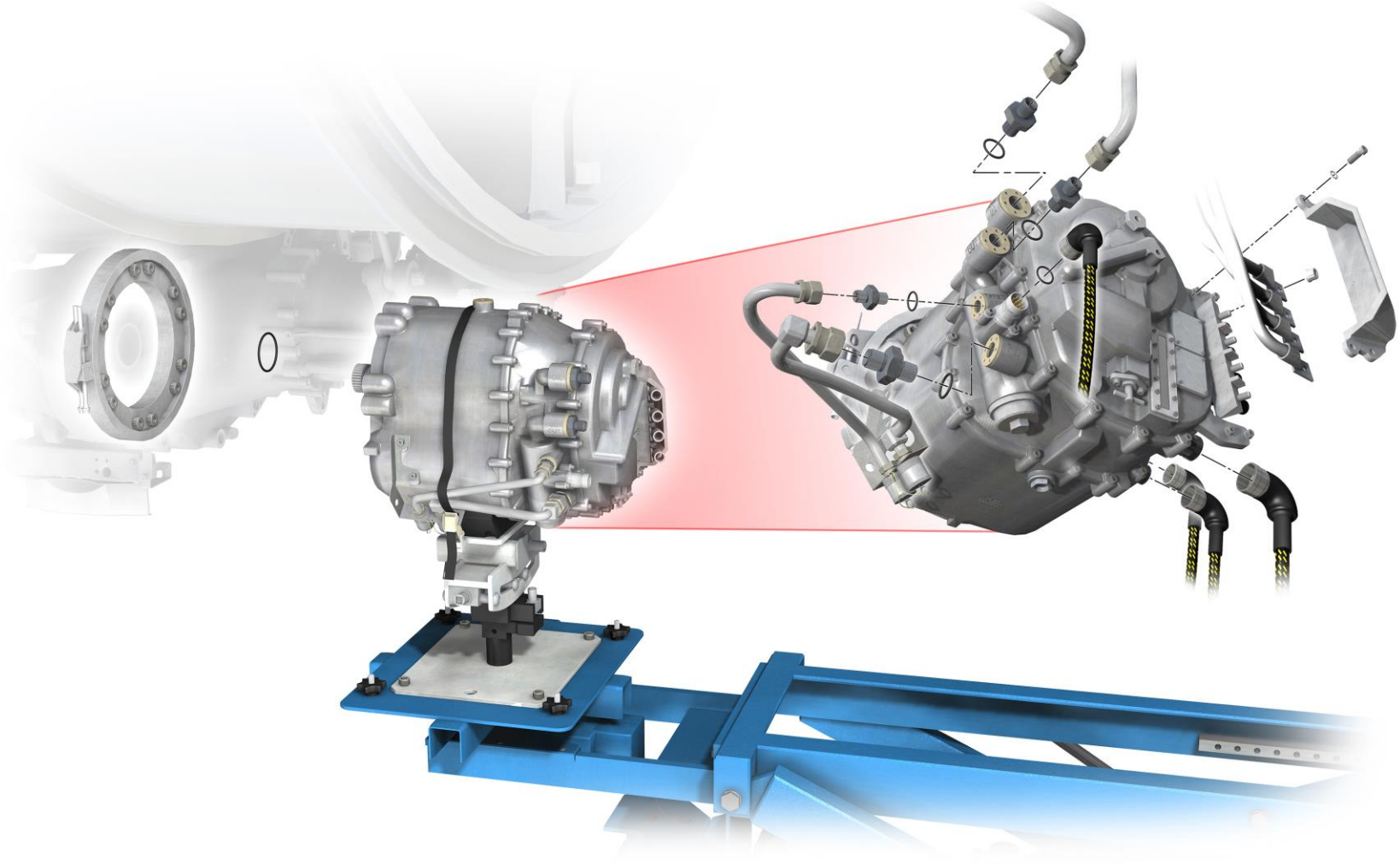

T1000 TEN_LBM_M03_036_01P

VFSG INSTALLATION

© Rolls-Royce plc 2018. Use or disclosure is subject to the legend on the Notice to Holder Page

Maintenance Practices

VFSG Servicing

The following is a brief description of these tasks. Refer to the AMM for the full description and the relevant OMSD for the correct use of any specialised tooling.

AMM Task B787-A-12-13-03-00C-218A-A.

This task should be completed when:

1. A VFSG is low on oil or has too much oil.
2. A VFSG Oil Filter has been replaced.
3. A VFSG has been removed and installed.
4. A VFSG has been replaced.
5. The VFSG external oil cooling circuit connections have been opened.

If any of the above tasks has been carried out it will be necessary to operate the VFSG to give flow to the external oil cooling circuit. This allows the oil circuit to operate at the rate and aeration levels that will occur during engine operation. It also ensures the external oil circuit is full of oil and will allow a more accurate indication of the oil level in the VFSG.

CAUTION

DO NOT DO A CHECK OF A DISCONNECTED VFSG. THIS CAN CAUSE AN INCORRECT OIL QUANTITY IN THE VFSG. THE OPERATION OF A VFSG WITH AN INCORRECT OIL QUANTITY CAN CAUSE DAMAGE TO THE EQUIPMENT.

1. Remove the overflow and pressure fill valve caps.
2. Connect the oil service couplings and the drain hose to the overflow and pressure fill valves.
3. Put the free end of the drain hose into a clean 19litre (5gal) container.
4. Connect the pressure fill hose to the VFSG service cart and fill the VFSG with oil to a maximum of 40psi.
5. Use only the type and brands of oil specified in the AMM:

CAUTION

PUT ONLY APPROVED OILS INTO THE VFSG. OILS THAT ARE NOT APPROVED CAN CAUSE DAMAGE TO THE VFSG.

DO NOT MIX TYPES OR BRANDS OF OIL. THIS CAN CAUSE DAMAGE TO THE EQUIPMENT.

6. Fill the VFSG with the specified oil until a minimum of 0.95 litres (1.00 qt) comes out of the overflow drain hose.
7. Stop filling and allow the oil to flow from the overflow drain hose until the flow decrease to between 3 and 5 drops for each minute.
8. Remove the pressure fill and overflow hoses and install the caps onto the valves.

Carry out the applicable test referenced in the AMM.

© Rolls-Royce plc 2018. Use or disclosure is subject to the legend on the Notice to Holder Page

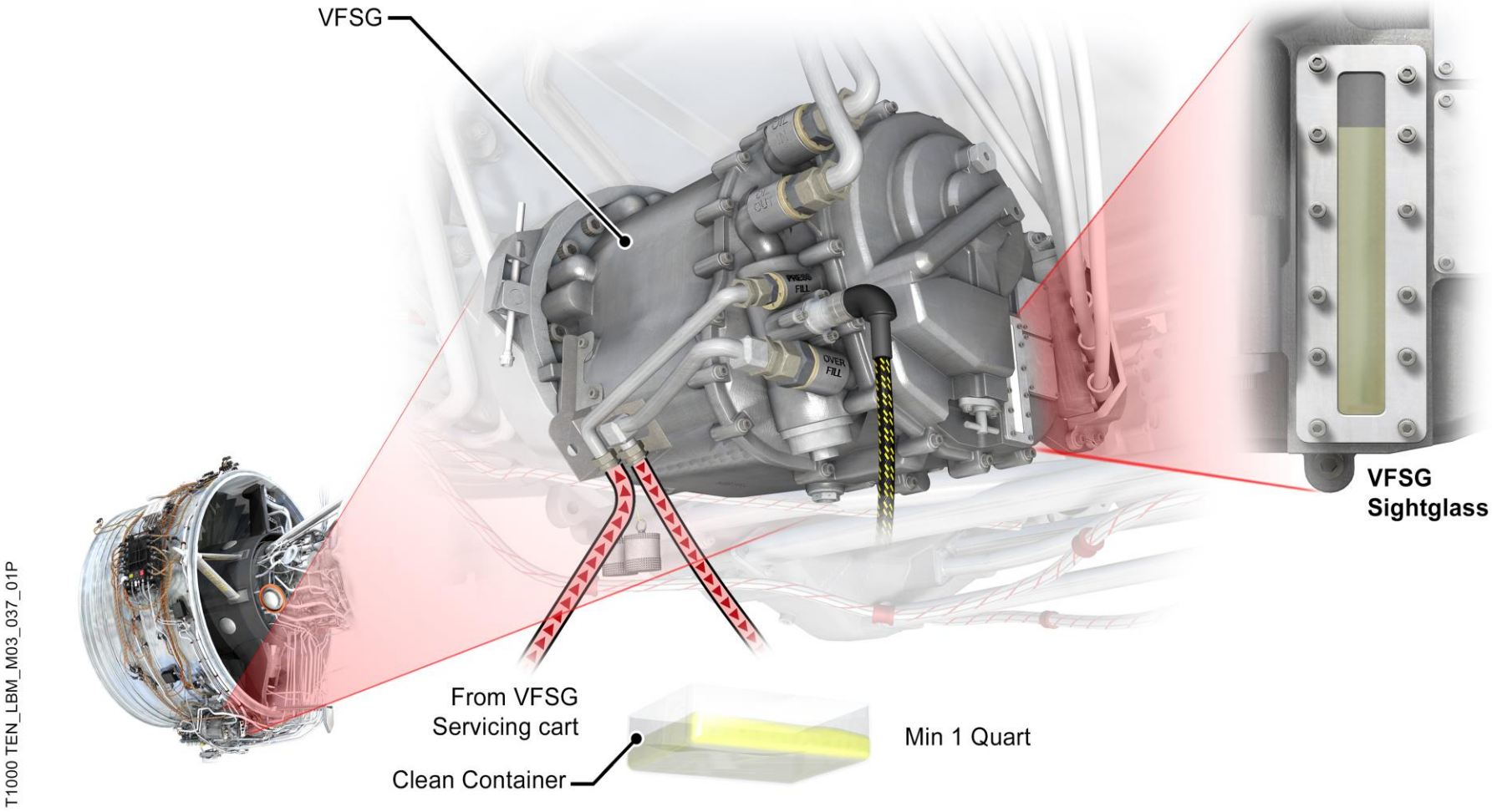

VFSG SERVICING

© Rolls-Royce plc 2018. Use or disclosure is subject to the legend on the Notice to Holder Page

Maintenance Practices

Powerplant Drains Leakage Rates

The following is a brief description of these tasks. Refer to the AMM for the full description and the relevant OMSD for the correct use of any specialised tooling.

AMM Task B787-A-R71-00-00A-364A-A

NOTE

After wet cranks or aborted starts fuel can leak from the drains mast. This is because the drains ejector does not empty the drains collector tank unless the engine is operated at or above idle. The leak will stop as the level in the drains collector tank decreases or the engine is operated at idle.

1. Start the engine and operate at minimum idle speed for a minimum of 10 minutes.
2. Measure the fluid from the drains mast using a clean 1-quart (1litre) container.
3. Inspect the drains mast to determine form which area of the Powerplant the leak is coming from.
4. Use the leakage rate table to determine if the leak is acceptable.
5. Shut down the engine.

© Rolls-Royce plc 2018. Use or disclosure is subject to the legend on the Notice to Holder Page

DRAIN POINT	FLUID	ENGINE IS AT IDLE	ENGINE IS STOPPED	NOTES
1. Drains Tank/Oil Tank	Fuel	10 drops/min (30 cc/hr) maximum	None	
	Engine Oil	None	None	
2. Hydraulic Pump	Hydraulic Fluid	5 drops/min (15 cc/hr) maximum	None	1 drop/min (3 cc/hr) Maximum permitted for the first 100 hours
3. Pylon	Fuel/Hydraulic Fluid/Water	None	None	
4. Hydraulic Pump Gearbox Pad	Engine Oil	1 drop/min (3 cc/hr) maximum	1 drop/min (3 cc/hr) maximum	
5. Right VSFG Air/Oil Heat Exchanger	Engine Oil	2 drop/min (5 cc/hr) maximum	None	
6. Fuel Pump	Fuel	10 drops/min (30 cc/hr) maximum	None	20 drops/min (60 cc/hr) maximum permitted for one flight only to permit scheduling of the LRU replacement
	Engine Oil	1 drop/mim (3 cc/hr) maximum	1 drop/mim (3 cc/hr) maximum	
7. Right Variable Frequency Starter Generator (VFSG)	Engine Oil	1 drop/mim (3 cc/hr) maximum	None	
8. Left VFSG Air/Oil Heat Exchanger	Engine Oil	2 drop/min (5 cc/hr) maximum	None	
9. Left Variable Frequency Starter Generator (VFSG)	Engine Oil	1 drop/min (3 cc/hr) maximum	None	
10. Variable Stator Vane Actuator (VSV)	Fuel	7 drop/min (20 cc/hr) maximum	None	14 drops/min (40 cc/hr) maximum permitted for one flight only to permit scheduling of the LRU replacement

T1000 TEN_LBM_M03_038_01P

POWERPLANT DRAINS LEAKAGE RATES

© Rolls-Royce plc 2018. Use or disclosure is subject to the legend on the Notice to Holder Page

Maintenance Practices

Powerplant Preservation

The following is a brief description of these tasks. Refer to the AMM for the full description and the relevant OMSD for the correct use of any specialised tooling.

AMM Task B787-A-R71-00-03-00A-810A-A

The full task in the AMM provides the engineer with the procedures for preservation of the engine. A chart, similar to the one below, provides the climate conditions and storage times.

CAUTION: YOU MUST NOT KEEP THE ENGINE IN STORAGE FOR TOO LONG. THE TIMES GIVEN IN THIS PROCEDURE ARE THE MAXIMUM FOR WHICH THE ENGINE CAN BE PRESERVED. IF THESE PROCEDURES ARE NOT FOLLOWED, DAMAGE TO THE ENGINE CAN OCCUR. YOU MUST DO ALL THE APPLICABLE PROCEDURES WHEN AN ENGINE IS PUT IN STORAGE. IF THEY ARE NOT FOLLOWED, CORROSION AND GENEREAL DETERIORATION OF THE CORE ENGINE AND FUEL SYSTEM CAN OCCUR.

CAUTION: DO ALL THE APPLICABLE PRESERVATION PROCEDURES WHEN YOU PUT AN ENGINE INTO STORAGE. IF YOU DO NOT, CORROSION AND GENERAL DETERIORATION OF THE CORE ENGINE AND THE FUEL SYSTEM CAN OCCUR.

The preservation procedure protects the Trent 1000 against corrosion, liquid and debris entering the engine and atmospheric conditions during periods of storage and inactivity. Besides inhibiting the fuel system and installing blanks where required the following is also required:

- Preservation procedure for the main line bearings (Task B787-A-R71-00-03-03A-810A-A).
- Attach the transportation covers (Task B787-A-R71-00-03-05A-722A-A).
- Inhibit the fuel system (Task B787-A-R71-00-03-04A-810A-A).
- Install the desiccant I.A.W the AMM if the engine is to be stored on wing (Task B787-A-R71-00-03-00A-810A-A).
- Install the engine in a moisture vapour proof (MVP) bag (Task B787-A-R71-00-03-06A-810A-A).

Before the engine is put into storage the following must be carried out:

- Clean and examine the engine (Task B787-A-R71-00-03-01A-258A-A).
- Procedure to dry the engine (Task B787-A-R71-00-03-02A-950A-A).

If the fire extinguisher system has been operated then the following procedures must be carried out before storing the engine:

- Clean the Powerplant after you operate the aircraft fire extinguishers (Task B787-A-R71-00-03-07B-258A-A).
- Clean the Powerplant after you operate the ground fire extinguishers (task B787-A-R71-00-03-07C-258A-A).

© Rolls-Royce plc 2018. Use or disclosure is subject to the legend on the Notice to Holder Page

INSTALLED ENGINE/POWER PLANT
OR
NON-INSTALLED ENGINE/QEC UNIT

	CONDITION	STORAGE TIME	PRESERVE THE MAIN LINE BEARINGS	ATTACH THE COVERS AND THE SEALS	INHIBIT THE FUEL SYSTEM	INSTALL DESICCANT	INSTALL A REMOVED ENGINE IN AN MVP BAG
OUTSIDE	Arid - e.g. desert	Up to 30 days		*			
		31 days to 3 months		*	†		
		3 to 12 months		*	*		
	Non - arid climate	Up to 30 days		*		*	
		31 days to 3 months		*	†	*	
		3 to 12 months	*	*	*	*	*
INSIDE	Constant temperature and humidity (air conditioned)	Up to 30 days		*			
		31 days to 3 months		*	*		
		3 to 12 months		*	*		
	Non - air conditioned environment	Up to 30 days		*		*	
		31 days to 3 months		*	*	*	
		3 to 12 months	*	*	*	*	*

† The engine must be started or the fuel system must be inhibited on the 31st day of storage

If the engine fuel system is not inhibited the engine must be started every 31 days

T1000 TEN_LBM_M03_039_01P

© Rolls-Royce plc 2018. Use or disclosure is subject to the legend on the Notice to Holder Page

On Board Maintenance – Ground Tests

Introduction

Ground Tests provide a means by which maintenance personnel can conduct Engine related tests in a safe and controlled manner. The test called up is to be carried out when directed by the relevant AMM of FIM procedure.

Test Structure

The Central Maintenance Computing Function (CMCF) will generate screens to guide the operator through in the following test steps:

- Test Set-Up (indicates to the operator any necessary warnings, switch selections and instructions required to carry out the test in a safe manor).
- Test In-Progress (Indicates that the test is currently being carried out (operating) – a STOP TEST option is available if required at this point).
- Test Close-Up (switch selections and instructions required to return the system to its original condition).
- Fault Reporting (indicates Passed or Failed condition).

Below is an indication of the VFSG Thermal Bypass Valve test together with an explanation of the test capabilities.

Note: See the Troubleshooting section for more details on access and conducting Ground Tests.

© Rolls-Royce plc 2018. Use or disclosure is subject to the legend on the Notice to Holder Page

Test Name
EEC SYSTEM TEST CHANNEL A
EEC SYSTEM TEST CHANNEL B
ESS ANTI-ICE SYSTEM
FUEL METERING VALVE SYSTEM CHANNEL A
FUEL METERING VALVE SYSTEM CHANNEL B
FUEL RETURN TO TANK VALVE
HANDLING BLEED VALVE SYSTEMS CHANNEL A
HARNESS CHANNEL A
HARNESS CHANNEL B
IGNITION SYSTEM CHANNEL A
IGNITION SYSTEM CHANNEL B
MODULATED AIR SYSTEM
P20/T20 PROBE HEATER
OIL BYPASS VALVE SYSTEM CHANNEL A
OIL BYPASS VALVE SYSTEM CHANNEL B
OIL DEBRIS MONITORING SYSTEM RESET CHANNEL A
OIL DEBRIS MONITORING SYSTEM RESET CHANNEL B
SECONDARY AIR SYSTEM
TURBINE CASE COOLING ACTUATION SYSTEM
THRUST REVERSER INTERLOCK SOLENOID
VFSG THERMAL BYPASS VALVE
VARIABLE STATOR VANE SYSTEM CHANNEL A
VARIABLE STATOR VANE SYSTEM CHANNEL B
VFSG AOHE AIR CONTROL VALVE SYSTEM CHANNEL A
VFSG AOHE AIR CONTROL VALVE SYSTEM CHANNEL B

The VFSG Thermal By-pass Valve (TBV) Ground Test is provided to allow the operator to verify the operation of the TBV actuation system for fault confirmation and return to service validation. This test is performed when the engine operating at Ground idle.

T1000 TEN_LBM_M03_040_01P

© Rolls-Royce plc 2018. Use or disclosure is subject to the legend on the Notice to Holder Page

Maintenance Practices

Flight Deck Effects

Introduction

Below is an indication of the associated Flight Deck Effect (FDE) messages for this section (Propulsion System) together with the message type (level), an explanation of its meaning, dispatch restrictions (if any) and expected actions taken by flight or ground crew.

Note: This is for your guidance only. Due to the nature of the aircraft and engines continual development these may change and Rolls Royce cannot guarantee that they are still current and fully accurate. As such, always refer to the appropriate AMM procedure for reference.

© Rolls-Royce plc 2018. Use or disclosure is subject to the legend on the Notice to Holder Page

Message	Type	Dispatch	Meaning
ELEC GEN 1 OIL VALVE L (R)	Status	Time Limited Dispatch	Left (Right) Engine Generator 1 Thermal By-pass Valve failed in an uncommanded position or both channels position sensor failed or both channels solenoid drive failed or both channels VFSG oil temp failed
ELEC GEN 2 OIL VALVE L (R)	Status	Time Limited Dispatch	Left (Right) Engine Generator 2 Thermal By-pass Valve failed in an uncommanded position or both channels position sensor failed or both channels solenoid drive failed or both channels VFSG oil temp failed

T1000 TEN_LBM_M03_041_01P

© Rolls-Royce plc 2018. Use or disclosure is subject to the legend on the Notice to Holder Page

Propulsion System Reference Wiring Diagrams

Introduction

Below is a wiring schematic of the associated units connected to the EEC. This is only a representation of the actual connectors but all plugs and connectors are indicated with the reference identifiers. This should be used for reference only and not be used as a definitive document. For a more detailed explanation (pins and sockets for troubleshooting purposes etc) and for further details, then always refer to the actual wiring diagrams as given within the AMM or FIM electronic documentation.

© Rolls-Royce plc 2018. Use or disclosure is subject to the legend on the Notice to Holder Page

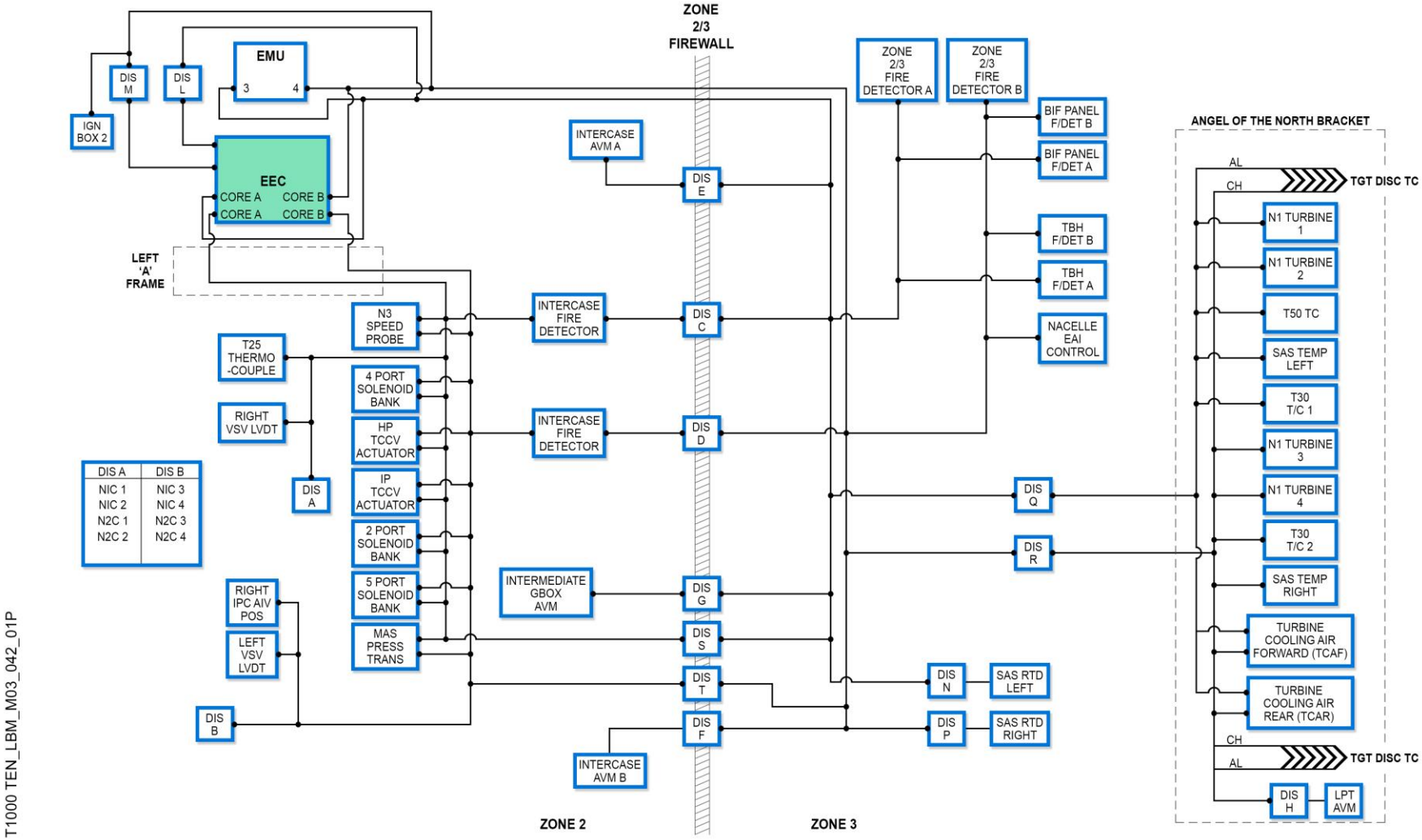

ENGINE WIRING SCHEMATIC

© Rolls-Royce plc 2018. Use or disclosure is subject to the legend on the Notice to Holder Page

Propulsion System Reference Wiring Diagrams

Introduction

Below is a wiring schematic of the associated units connected to the EEC. This is only a representation of the actual connectors but all plugs and connectors are indicated with the reference identifiers. This should be used for reference only and not be used as a definitive document. For a more detailed explanation (pins and sockets for troubleshooting purposes etc) and for further details, then always refer to the actual wiring diagrams as given within the AMM or FIM electronic documentation.

© Rolls-Royce plc 2018. Use or disclosure is subject to the legend on the Notice to Holder Page

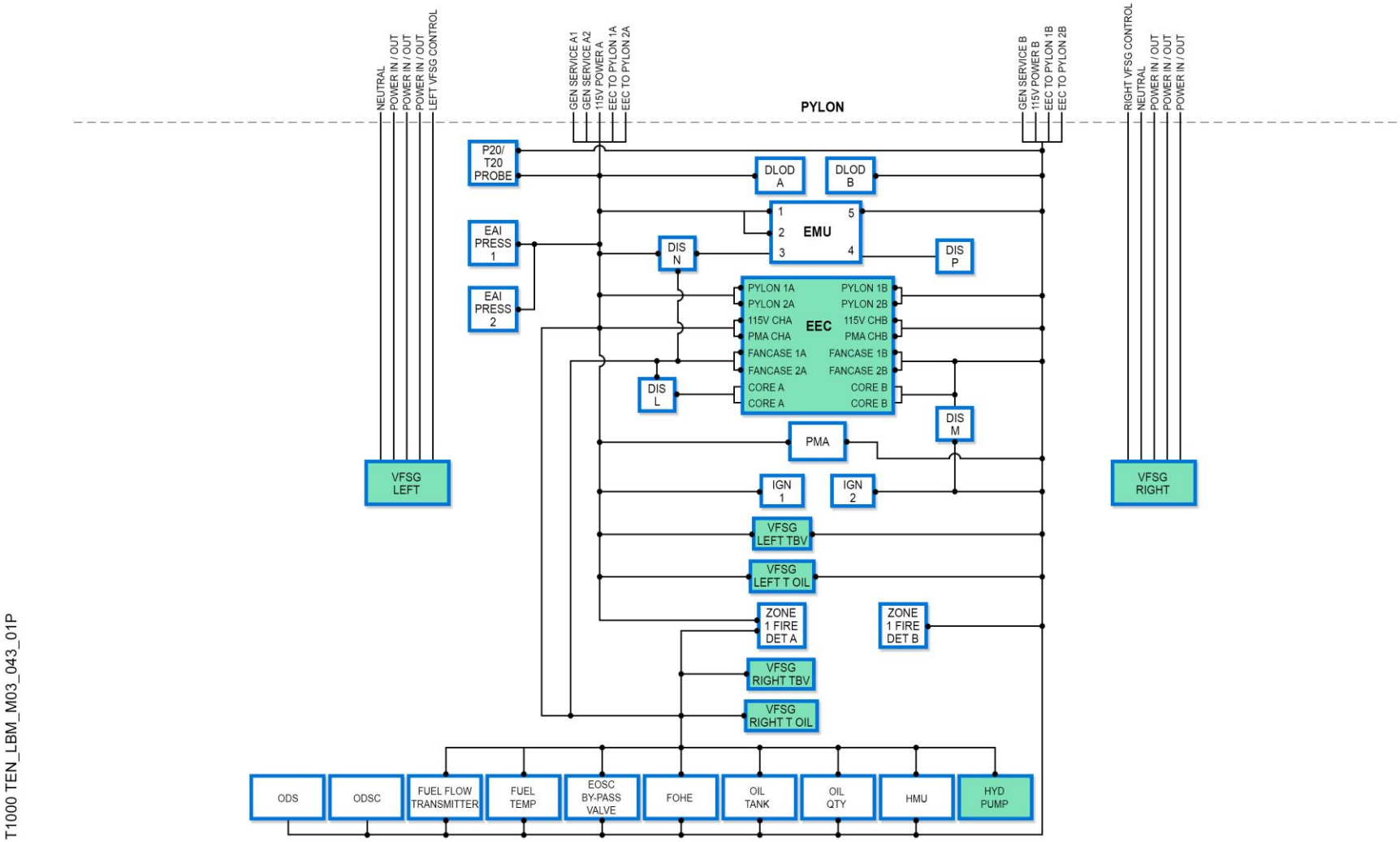

T1000 TEN_LBM_M03_043_01P

ENGINE WIRING SCHEMATIC

© Rolls-Royce plc 2018. Use or disclosure is subject to the legend on the Notice to Holder Page

END OF SECTION

Section 4 - Mechanical Arrangement

ATA Chapter Covered:

72

© Rolls-Royce plc 2018 Use or disclosure is subject to the legend on the Notice to Holder page

Main Rotating Assemblies

Description

The three rotating assemblies comprise:

- Low Pressure (LP) compressor (fan) driven by a six-stage LP turbine via a shaft.
- Intermediate pressure (IP) compressor driven by a single stage IP turbine via a shaft.
- High Pressure (HP) compressor driven by a single stage HP turbine via a shaft.

Each of the rotating assemblies is supported independently by a combination of roller bearings and ball (location) bearings.

The External Gearbox (EGB) is driven from the IP system through the Internal Gearbox (IGB) and the Intermediate Gearbox.

An IP radial drive shaft connects the Intermediate Gearbox to the External Gearbox and an IP quill shaft connects the IGB to the Intermediate Gearbox.

© Rolls-Royce plc 2018 Use or disclosure is subject to the legend on the Notice to Holder page

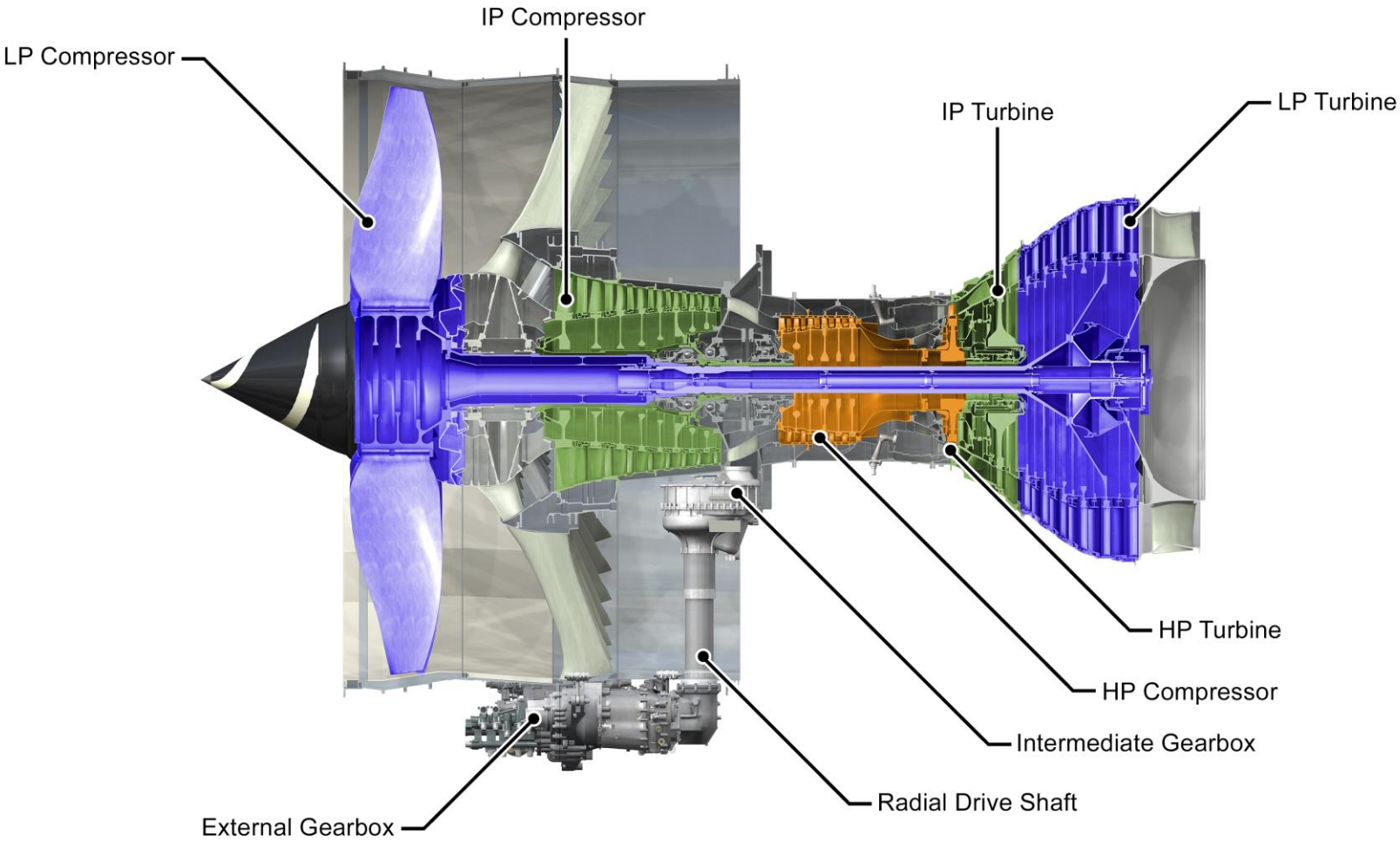

T1000 TEN_LBM_M04_044_01P

MAIN ROTATING ASSEMBLIES

© Rolls-Royce plc 2018 Use or disclosure is subject to the legend on the Notice to Holder page

Engine Main Bearing Arrangement

Bearings provide a means of accurately locating rotors and transmitting force whilst offering minimal rotational resistance.

Two types of bearings are used in a gas turbine engines. They are ball bearings and roller bearings.

Ball bearings can withstand radial and axial forces and are therefore suitable for transmitting thrust and locating shafts.

Roller bearings transmit radial loads while allowing axial movement of the shaft.

The LP and IP rotor assemblies are each supported by three bearings. The HP rotor is supported by two bearings.

Low Pressure (LP) Rotor

The LP rotor system is supported by two roller bearings and a single ball bearing. The front roller bearing supports the LP compressor and the rear roller bearing supports the LP turbine. The central ball (location) bearing positions the shaft and also transmits the thrust developed by the LP system.

Intermediate Pressure (IP) Rotor

The IP rotor system is supported by two rollers bearings and a single ball bearing. The front roller bearing supports the IP compressor and the rear roller bearing supports the IP turbine. The central ball (location) bearing positions the shaft and also transmits the thrust developed by the IP system.

High Pressure (HP) Rotor

The HP rotor system is supported in two positions. A roller bearing supports the HP turbine. The ball (location) bearing supports the HP compressor, locates the HP system, and also transmits the thrust developed by the HP rotor system.

Location

The three ball (location) bearings are located in the Internal Gearbox (IGB), which is inside the Intermediate Case module.

The thrust developed by the engine is transmitted by the ball bearings to the aircraft pylon via the Intermediate Case module, the thrust links and the rear engine mount.

The five roller bearings are located in three further bearing housings.

The LP and IP compressor roller bearings are in the Front Bearing Housing (FBH) within module 32.

The HP turbine and IP turbine roller bearings are in the HP/IP bearings housing within module 51.

The LP turbine roller bearing is in the Tail Bearing Housing (TBH) within module 52.

.

© Rolls-Royce plc 2018 Use or disclosure is subject to the legend on the Notice to Holder page

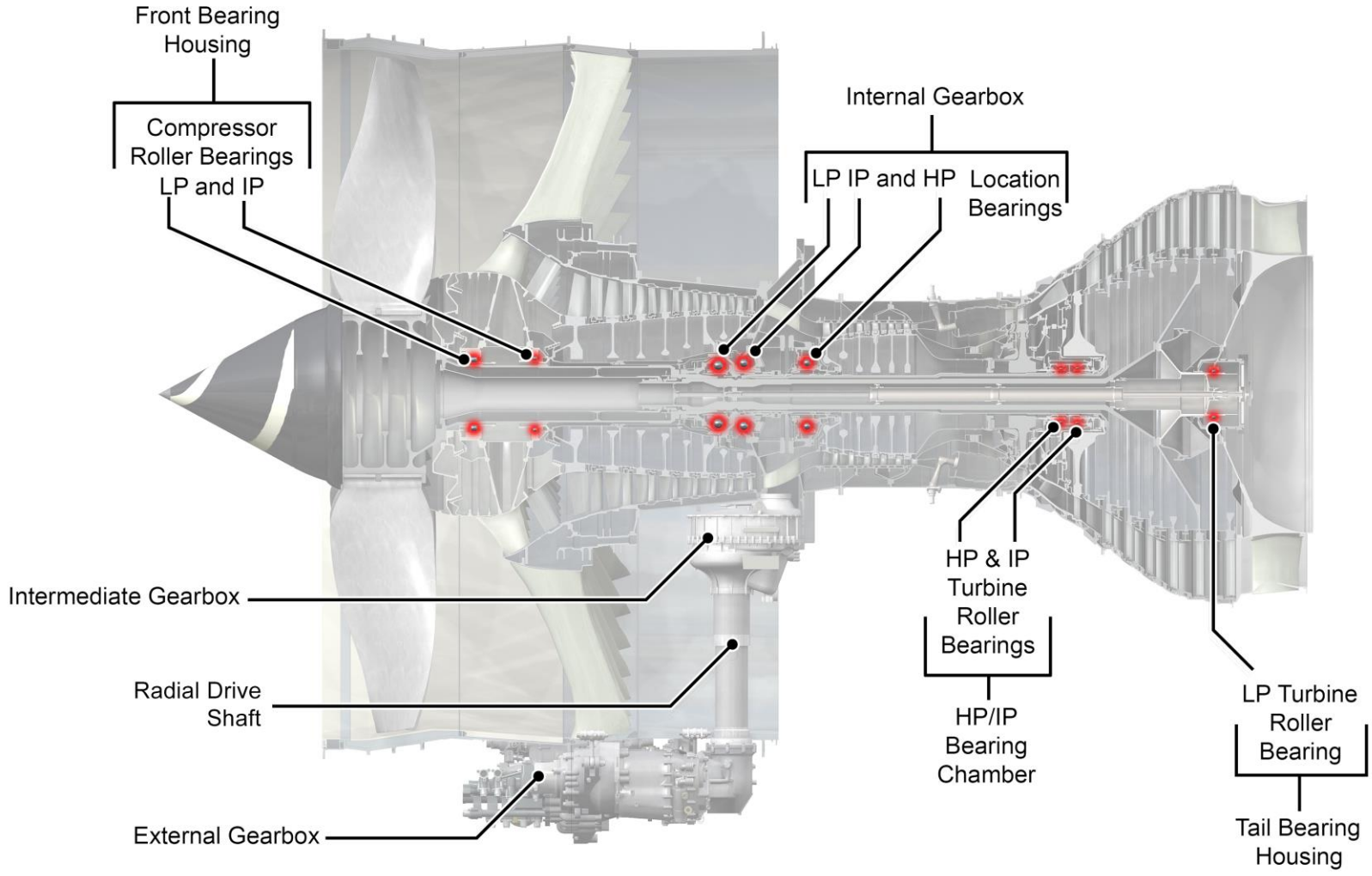

ENGINE MAIN BEARING ARRANGEMENT

© Rolls-Royce plc 2018 Use or disclosure is subject to the legend on the Notice to Holder page

Trent 1000 TEN Modular Breakdown

The Trent 1000 TEN engine consists of eight modules as follows:

- Module 31 - LP Compressor Rotor.
- Module 32 - IP Compressor Case.
- Module 33 - Intermediate Case.
- Module 41 - HP System.
- Module 51 - IP Turbine.
- Module 52 - LP Turbine.
- Module 61 - External Gearbox.
- Module 62 - Intermediate Gearbox.

There are eight modules, that when assembled together, are connected to the associated engine systems to form the Trent 1000 engine.Each module is numbered in accordance with the Air Transport of America (ATA) numbering convention.

The modules are connected to their respective partners i.e. compressor to turbine, by an axial drive shaft and to the neighbouring module by bolts on the outer flange. The external gearbox is mounted to the bottom of the LP Compressor Case.

Engines constructed using a modular approach offer a number of important benefits, which include:

- Decrease in repair turn-round time.
- Lower overall maintenance costs.
- Reduced spare engine holdings.
- Maximized module life.
- Easier transportation and storage.
- More economical transportation and storage.

Non-Modular Components

Components that are not part of the module are described as being non-modular such as tubes, harnesses and in the case of the Trent 1000 the LP Compressor Case and the LP Compressor Blades. The annulus fillers and spinner assembly are also classed as non-modular items.

Amongst these components, the fancase is used to mount the external gearbox and is driven by a radial shaft connected to the intermediate gearbox. The fancase also provides location features for mounting fuel and oil system non-modular components.

© Rolls-Royce plc 2018 Use or disclosure is subject to the legend on the Notice to Holder page

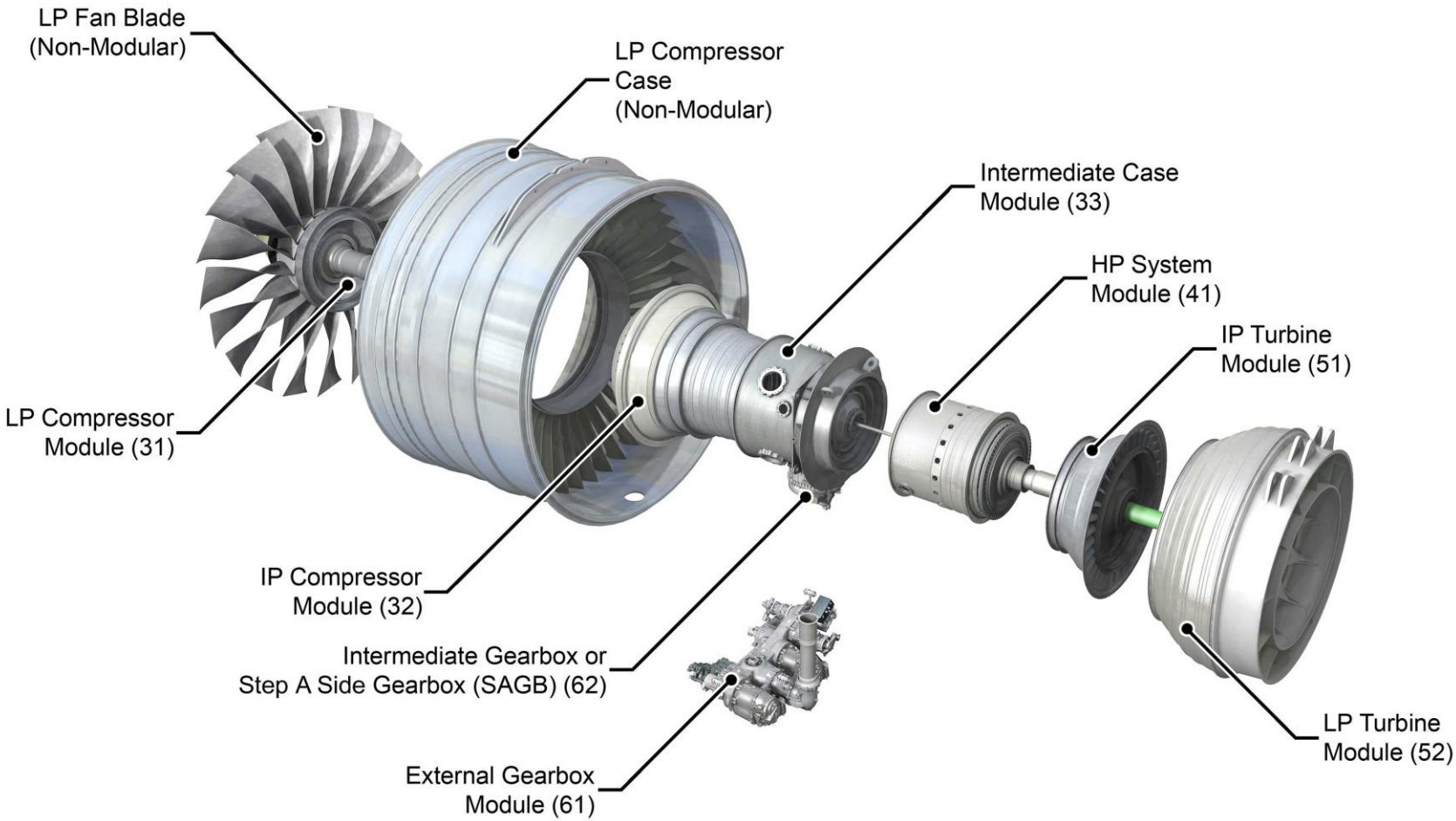

T1000 TEN_LBM_M04_046_01P

TRENT 1000 MODULAR BREAKDOWN

© Rolls-Royce plc 2018 Use or disclosure is subject to the legend on the Notice to Holder page

LP Compressor Module (31)

Description

The LP compressor consists of the fan disc, fan shaft, nose cone support ring and fan air seal.

Fan Disc

The fan disc is a triple diaphragm titanium disc with 20 axial dovetail roots to locate the fan blades.

Each dovetail features a dry film lubricated circumferential slot that locates the fan blade shear key. The outer rim of each dovetail includes two integral annulus filler location lugs.

The disc is connected to the LP compressor shaft by a bolted curvic coupling machined on the rear face of the disc drive arm.

LP Compressor Shaft

The steel LP Compressor shaft is bolted to the fan disc through a curvic coupling and is connected to the LP turbine shaft through a helical spline coupling.

A 60-tooth phonic wheel is machined on the LP compressor shaft for measurement of LP speed. One tooth on the phonic wheel is machined slightly shorter than the rest. This provides a ‘once-per-rev‘ signal that is used to calculate the phase angle of any LP vibration when trim balancing the LP system.

A non-load carrying fan retention shaft is fitted inside the fan shaft to retain the fan assembly to the engine should the LP shaft fail.

Nose Cone Support Ring

The nose cone support ring has four concentric rings of boltholes. Starting at the outermost ring, 20 bolts provide axial retention of the annulus fillers a dowel hole is used to align the annulus fillers during installation.
The nose cone assembly is attached to the support ring by 30 bolts at the second ring of holes.

A third ring of 20 holes is used to attach the support ring to the front face of the LP Compressor disc and the innermost ring of holes provides a location for the installation of fan blade compensation weights if required.

Two offset alignment pins fitted to the rear face of the support ring ensure the ring can only be installed onto the disc in one position.

To assist in removal of the nose cone support ring there are 6 extraction inserts.

LP Fan Air Seal

Bolted to the LP Compressor shaft is the rotating component of the fan air seal. The fan air seal contains a 5-fin labyrinth seal. The seal fins are subject to fan air pressure on one side and IP8 pressure on the other. The pressure drop across this seal is used to control bearing loads in the Front Bearing Housing.

Identification of Number 1 Fan Blade

A number one (1) etched onto the LP Compressor Disc identifies number one (1) Fan Blade. The second and third fan blades are also identified in this manner and are written anti-clockwise, forward looking rear.

© Rolls-Royce plc 2018 Use or disclosure is subject to the legend on the Notice to Holder page

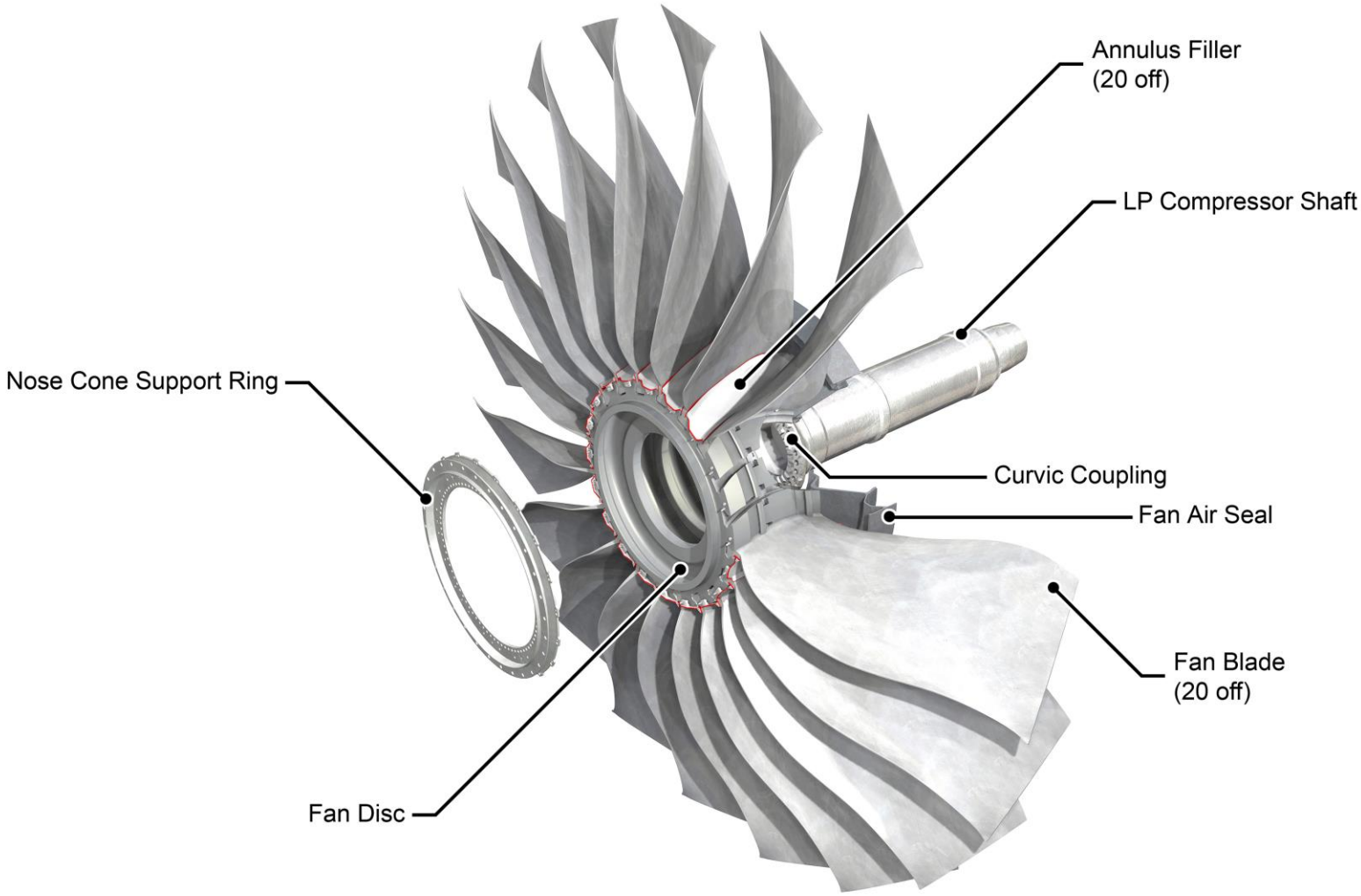

T1000 TEN_LBM_M04_047_01P

LP COMPRESSOR MODULE (31)

© Rolls-Royce plc 2018 Use or disclosure is subject to the legend on the Notice to Holder page

Spinner Assembly

Description

The spinner assembly directs air into the hub of the fan and has two main parts:

- Spinner
- Spinner Fairing

Spinner

The air intake spinner is a composite component and is painted and coated with polyurethane to prevent erosion. The rubber tip at the end of the spinner prevents ice build-up. Also painted onto the spinner from the tip rearwards is a white line. The primary purpose of this line is to give an indication of engine rotation. It can also be used to identify number 1 blade during maintenance. The angle formed by the conical spinner is designed to deflect any foreign material away from the core engine and direct it into the bypass duct.

The spinner attaches to the nose cone support ring with 30 bolts. Ten (10) of the bolt positions are used to locate brackets to which the spinner fairing brackets are attached, the remaining twenty (20) positions locate the spinner and can be used for trim balancing if required. To ensure correct location to the support ring the spinner is doweled into position.

An integral circumferential rubber ‘P’ seal that abuts the inner surface of the fairing assembly prevents the ingress of moisture.

To assist in removal of the spinner there are 4 extraction inserts.

Spinner Fairing

The spinner fairing is also a composite component and provides an aerodynamically smooth profile between the spinner and the annulus fillers. The spinner fairing attachment flange and also includes small aerodynamic bumps adjacent to each fan blade leading edge to improve aerodynamic efficiency. The fairing is attached to the spinner mounted fairing brackets with 10 radial screws.

Identification of Number One Blade

Number one blade can be identified from the outside of the engine by using the white painted swirl on the spinner and by viewing the white triangle on the flat surface of the spinner.

To further aid identification the first three (3) blades are numbered on the flat surface of the spinner in the direction of rotation.

© Rolls-Royce plc 2018 Use or disclosure is subject to the legend on the Notice to Holder page

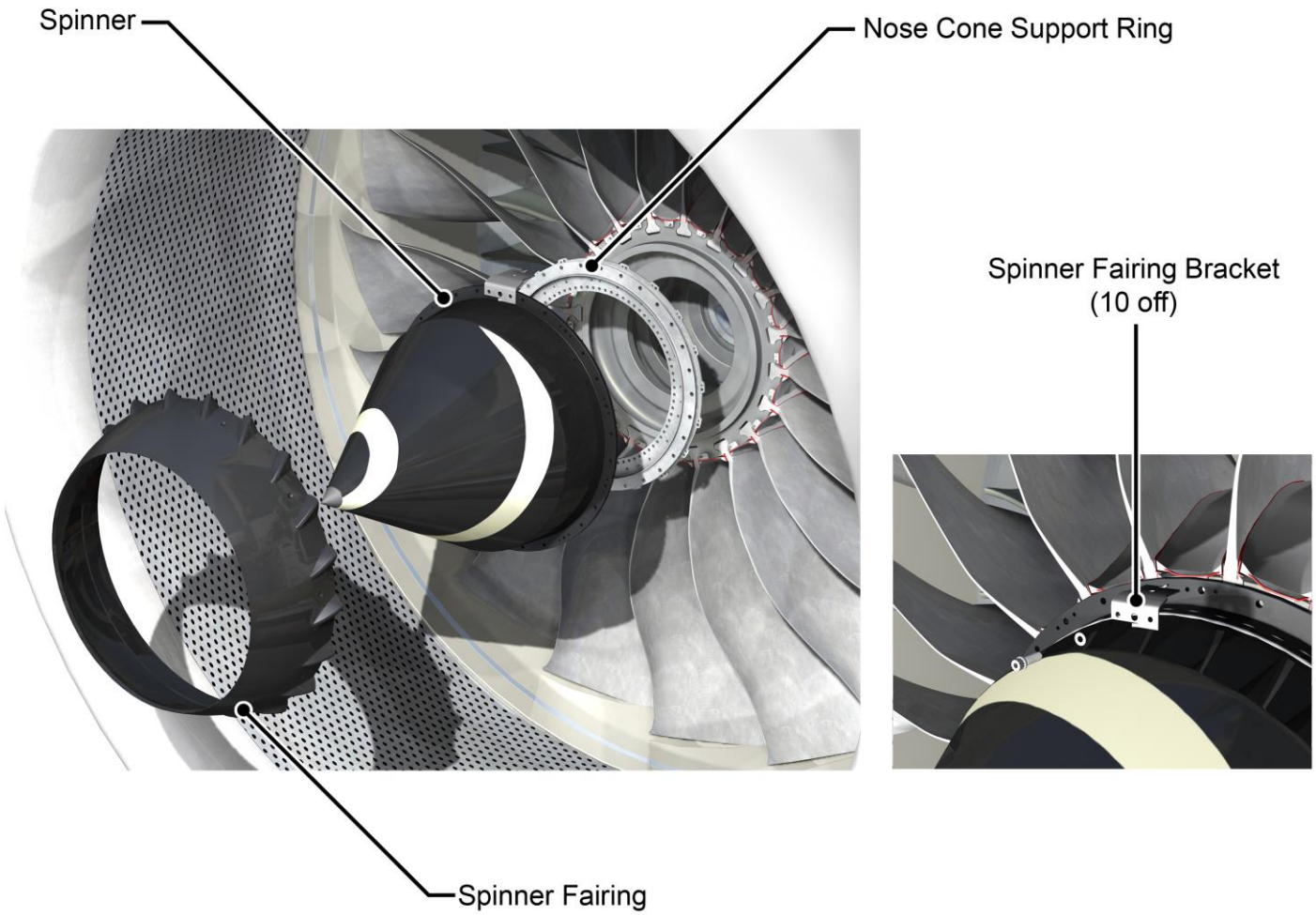

T1000 TEN_LBM_M04_048_01P

SPINNER ASSEMBLY

© Rolls-Royce plc 2018 Use or disclosure is subject to the legend on the Notice to Holder page

LP Compressor Blade and Annulus Filler Assemblies

Description

The Trent 1000 has twenty (20) hollow titanium, low speed, wide-chord swept Fan Blades that are designed to maximize efficiency and minimise noise.

The blades are manufactured by diffusion bonding two external titanium plates to a central titanium membrane, which is then super-plastically formed to give the correct aerofoil shape. The leading edge of the blade is of elliptical shape to increase the efficiency of the blade.

Each blade is located into the LP Compressor disc by a curved dovetail slot and retained axially by a nickel-alloy shear key installed to the base of the blade. The shear key is retained to the fan blade by a rubber strap.

The blade root has a dry film lubricant and Metco coating applied to reduce surface stress between the blade roots and disc dovetail.

To prevent excessive movement between the blades and disc contact areas titanium sliders are inserted between the dovetail slot of the disc and base of the blades. This acts to locate the blades radially and ensures that the shear key is located into the slot in the disc.

Etched on the bottom of the dovetail of each blade is information that is specific to that blade and includes:

- Assembly Part Number.
- Serial No.
- Tangential, Axial and Radial Moment Weights.

Annulus Fillers

Twenty aluminium annulus fillers provide a smooth aerodynamic profile between each fan blade into the compressors.

Two hooks engage into two corresponding lugs on the fan disc to retain the annulus fillers radially. They are prevented from moving forwards by a dowel located into the location ring and secured to the support ring by a bolt.

Reinforced rubber seals bonded to the sides and front of the annulus filler prevent recirculation of air around the fan blade root to minimise air leakage.

© Rolls-Royce plc 2018 Use or disclosure is subject to the legend on the Notice to Holder page

T1000 TEN_LBM_M04_049_01P

FAN BLADE ASSEMBLY

© Rolls-Royce plc 2018 Use or disclosure is subject to the legend on the Notice to Holder page

IP Compressor Module (32)

Description

The IP compressor module is an eight-stage axial compressor assembly consisting of four main sections:

- Front Bearing Housing
- The IP Compressor Stage 1-4 case
- The IP Compressor Stage 5-8 case
- The IP Compressor rotor

Front Bearing Housing (FBH)

The FBH includes a hub, which houses the LP and IP compressor roller bearings, an oil sump and also the LP and IP shaft speed probes. Around the outer annulus are hollow Engine Section Stators (ESS), which during certain conditions, are heated with hot air using IP8 air supplied via the ESS anti-ice valve to prevent the build-up of ice.

The ESSs are welded together and fixed to the titanium fan outlet guide vanes (OGV) to form the FBH/OGV joint.

The FBH/OGV joint connects the LP compressor case to the core engine. Electrical cables, from the shaft speed probes, pass internally through the ESS vanes. Other vanes contain tubes to supply oil to and from the roller bearings. Behind the ESS vanes are the Variable Inlet Guide Vanes (VIGVs).

IP Compressor Stage 1-4 Case

The titanium stage 1-4 case is bolted between the FBH and the stage 5-8 cases. The stage 1-4 case is split horizontally into two semi-circular half cases.
Two stages of Variable Stator Vanes (VSVs) are installed in the half casings that are connected to the VSV / VIGV mechanism.
The steel Stage 3-4 fixed stator vanes are located in circumferential slots in the half cases.

IP Compressor Stage 5-8 Case

The steel IP Compressor Stage 5-8 case is bolted between the Stage 1-4 case and the HP Compressor case and can also be split into two semi-circular half cases. The case locates steel Stages 5-8 stator vanes.
Between all stator stages, the compressor rotor blades run in Metco 601 abradable linings, which are designed to minimise tip clearances and maximise compressor efficiency.

IP Compressor Rotor

The IP Compressor rotor consists of eight titanium discs welded together to form a drum. Stage 1 to 6 rotor blades are installed in axial dovetail slots and secured by lockstraps on stage 1, or outsprung rings on stages 2-6. Stage 7 & 8 rotor blades are retained in circumferential dovetail slots and locked by locknuts.
The IP front stubshaft is bolted to the Stage 1 disc and forms the inner race of the IPC roller bearing. The forward end of the stubshaft has a 60-tooth phonic wheel for IP speed measurement.
The stage 6 disc incorporates a drive arm with a curvic coupling to which the IPC rear stubshaft is attached. Splines in the stubshaft engage with a locking coupling, to which the IP turbine shaft is secured.

© Rolls-Royce plc 2018 Use or disclosure is subject to the legend on the Notice to Holder page

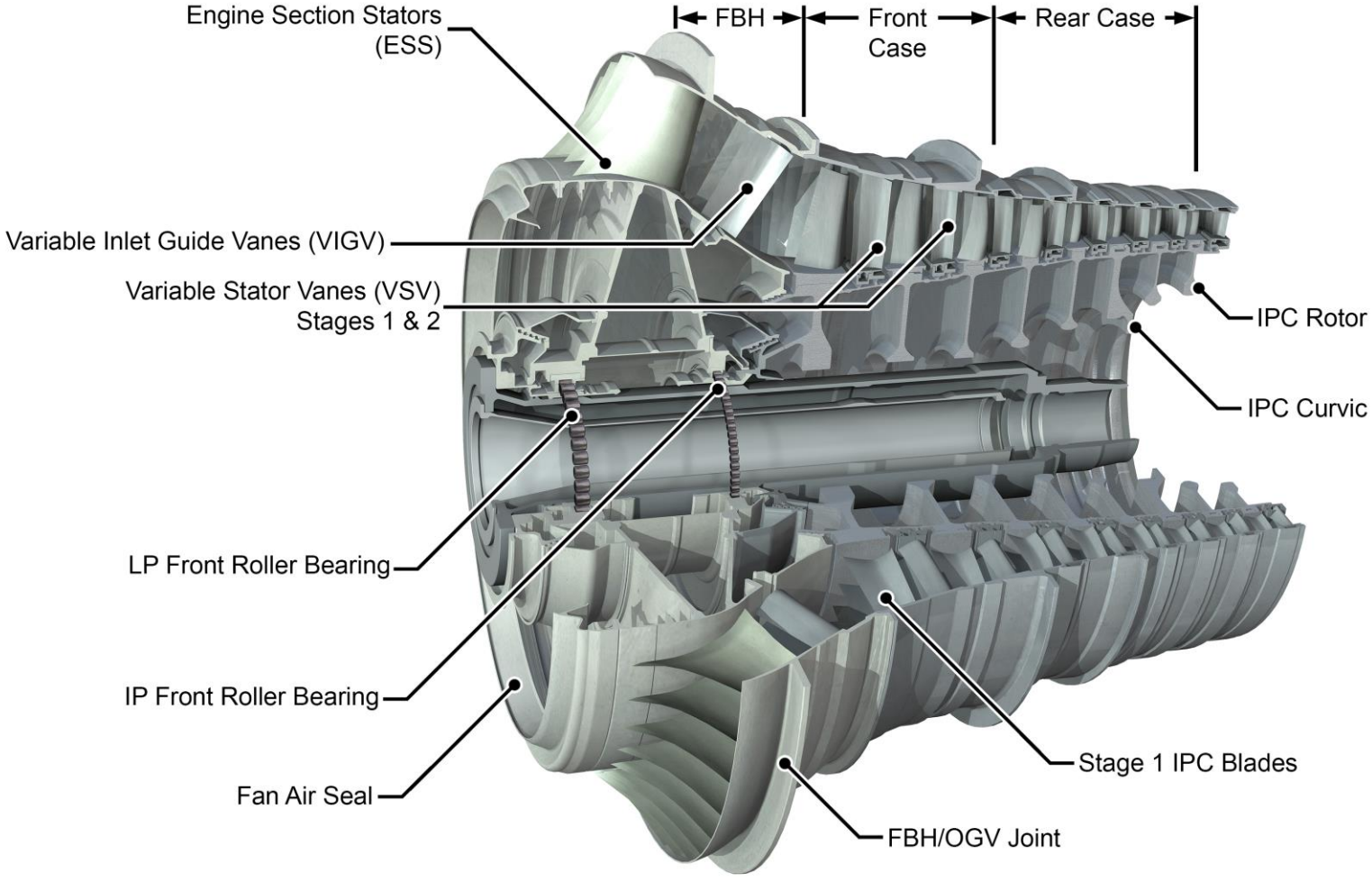

IP COMPRESSOR MODULE (32)

© Rolls-Royce plc 2018 Use or disclosure is subject to the legend on the Notice to Holder page

Intermediate Case Module (33)

Description

The intermediate case is one of the major structural parts of the engine and is made from a single titanium casting to form an aerodynamic duct that connects the IP & HP compressors.

Intermediate Case

The front part of the intermediate case is installed over the IP compressor and is bolted to a flange at the rear of the IP compressor stage 1-4 case. The rear part of the intermediate case is installed around the front part of HP compressor case and is bolted to a flange on the combustor outer case.

The front of the intermediate case incorporates a stiff triangular torque box that features integral lugs. Engine thrust loads are transmitted to the aircraft via thrust links attached to two of the lugs at the 10 o'clock and 2 o'clock positions.

Two 'A' frames are attached to the intermediate case by four lugs at the 3 o'clock and 9 o'clock positions. The A Frames provide torsional stability between the intermediate case and the LP compressor case.

The rear flange of the intermediate case also features an inner V- groove that locates the inner fixed structure of the thrust reverser.

The inner structure of the intermediate case incorporates the internal gearbox housing, which is supported by a hub formed by eight hollow aerofoil shaped struts. The struts form the aerodynamic duct between the IP and HP Compressors, Some of the struts provide locations for tubes that take oil to and from the internal gearbox housing.

Other struts supply IP compressor air for cooling and sealing purposes. Two of the struts incorporate pressure and temperature rakes for sensing IP compressor delivery pressure and temperature for input to the engine condition monitoring system.

Internal Gearbox

The internal gearbox housing contains the LP, IP and HP location bearings for the three rotating assemblies.

A helical gear at the rear of the IP stubshaft provides drive to a shaft which passes through the 6 o'clock strut to drive the Intermediate Gearbox during engine running.

The driveshaft also rotates the IP Rotor assembly during the engine start sequence.

The front of the HP Stubshaft is also located within the Internal Gearbox. A helical gear at the front of the stubshaft is used by the internal HP turning tool to rotate the HP Rotor during maintenance.

Intermediate Gearbox

The intermediate gearbox is attached to a mounting flange on the Intermediate Case at the 6 o'clock position.

© Rolls-Royce plc 2018 Use or disclosure is subject to the legend on the Notice to Holder page

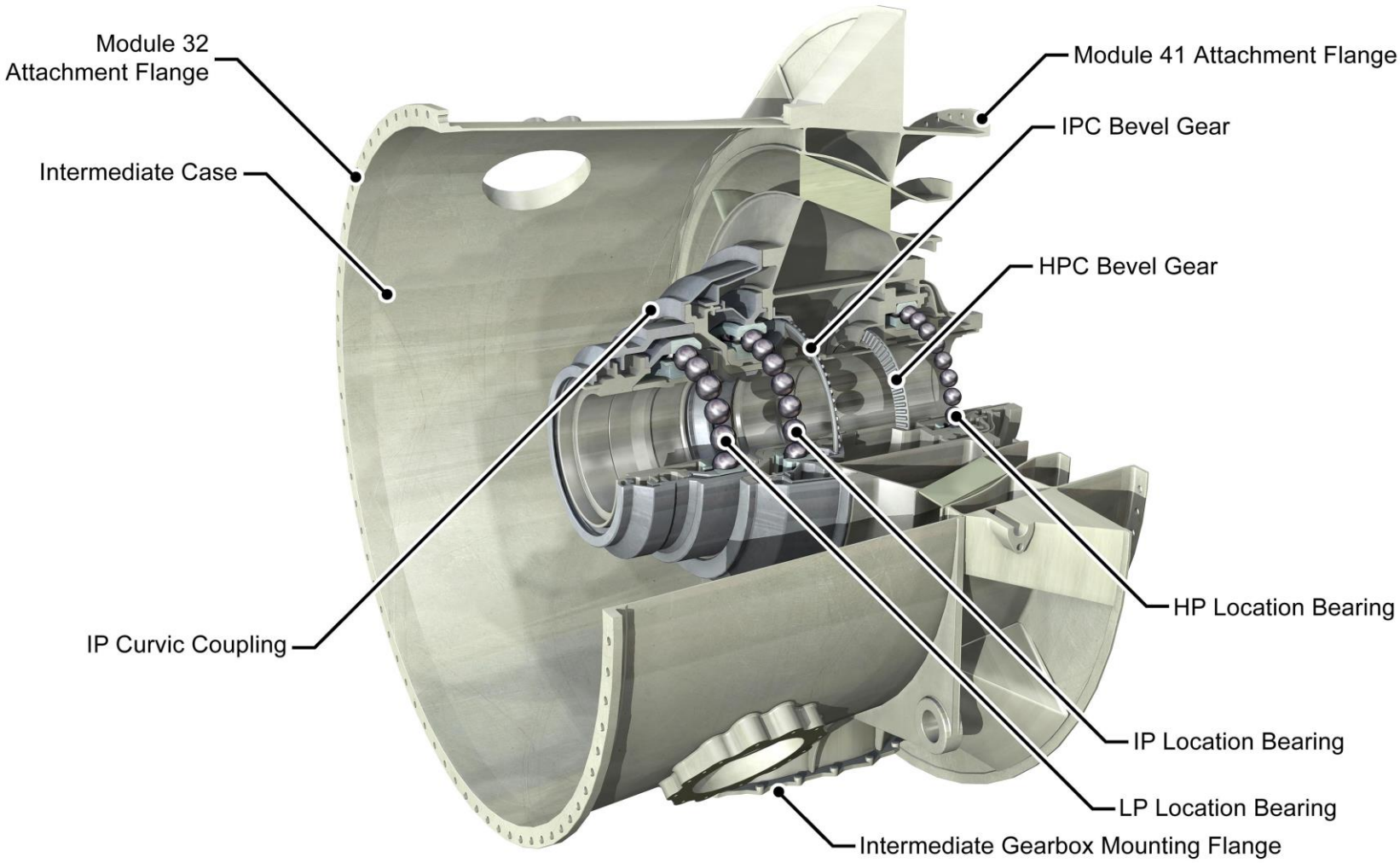

T1000 TEN_LBM_M04_051_01P

INTERMEDIATE CASE MODULE (33)

© Rolls-Royce plc 2018 Use or disclosure is subject to the legend on the Notice to Holder page

HP System Module (41)

Description

The HP system comprises the HP compressor, the combustor section and the HP turbine.

HP Compressor

The six-stage HP compressor rotor is a three-piece bolted assembly. Stages 1 to 3 are of a blisk construction, and welded together to form a drum.

NOTE: A blisk is a component consisting of a disc and blade manufactured from a single piece of material.

The Stage 5 & 6 discs and a tapered cone are welded together to form the rear drum. Between the blisk and rear drum is the Stage 4 disc.

Steel stage 4 to 6 rotor blades are installed in circumferential dovetail slots and are locked to the disc with locknuts.

A curvic ring on the Stage 1 disc drive arm is bolted to curvic teeth on the HP compressor stubshaft in Module 33. At the rear of the HP compressor the tapering cone is bolted to the HP turbine disc drive arm.

The HP compressor case comprises of a series of bolted cylindrical casings that locate the abradable rotor path linings for rotor blade tip sealing, and circumferential slots to retain the stator vanes.

Combustion Chamber and Outer Case

The system comprises an annular combustion liner supported by 9 radial mounting pins. The single skin combustor case outer casing attaches to the intermediate case and IP Turbine module at its front and rear flanges respectively.

Fuel is supplied to the combustion chamber by 18 Fuel Spray Nozzles (FSN), which bolt to the combustion outer case, and protrude into the front combustion liner head section.

The annular combustor consists of inner and outer walls to which combustor tiles are attached. The combustor tiles are coated with a Thermal Barrier Coating (TBC) on the gas washed surfaces. HP6 cooling air is passed between the tiles and the liner wall.

Rear inner and outer discharge nozzles direct gas leaving the combustor, into the High Pressure Nozzle Guide Vanes (HPNGV) assemblies. The HPNGVs are coated with a Thermal Barrier Coating (TBC) and internally cooled by HP stage 6 air. The HPNGVs allow the gas flow from the combustor to enter the HP turbine at the correct velocity, angle of attack and direction.

Attached to the combustion casing and axially in line with the HPT blades, is the HPT case cooling manifold. Fan air from the manifold impinges on the casing, resulting in a reduction in turbine blade tip clearance, with subsequent improvement in performance.

HP Turbine

The single stage HPT disc features an integral forward drive arm that forms the bolted joint to the HPC drum. A rearward projecting integral HPT stubshaft forms the inner race of the HPT roller bearing.

The rim of the disc incorporates ‘fir-tree’ fixings to locate the shrouded single crystal HPT blades. The blades are internally cooled with HP6 air and have a thermal barrier coating applied to all gas washed surfaces.

© Rolls-Royce plc 2018 Use or disclosure is subject to the legend on the Notice to Holder page

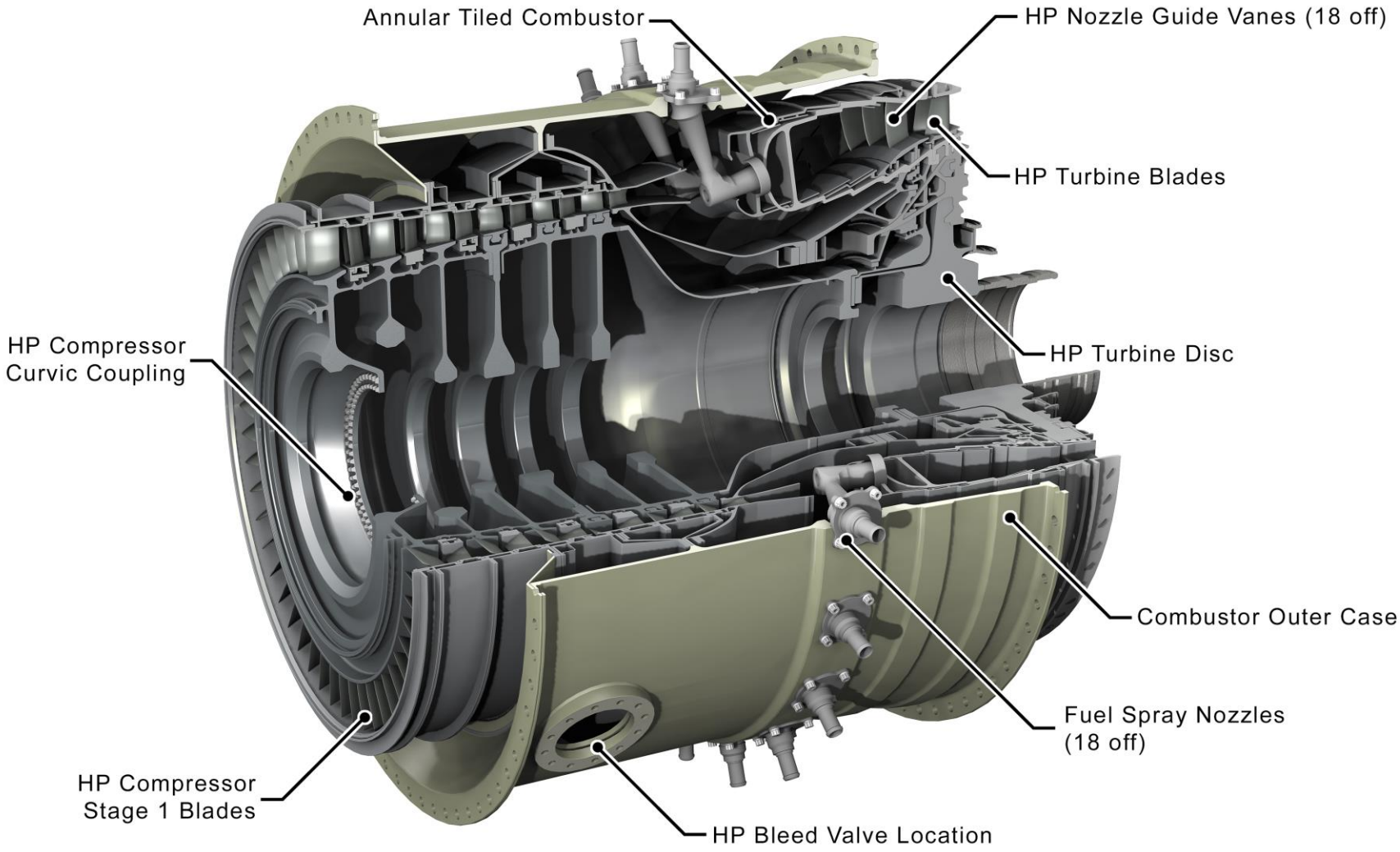

HP SYSTEM MODULE (41)

© Rolls-Royce plc 2018 Use or disclosure is subject to the legend on the Notice to Holder page

IP Turbine Module (51)

Description

The IP Turbine case houses the single stage IP turbine the IP NGVs, LP Turbine Stage 1 NGVs and the HP/IP bearing housing.

The front flange of the IPT case bolts to the combustion case and the rear flange bolts to the front flange of the LPT case.

The IP NGVs are hollow, internally cooled by IP8 air at high power or HP3 air at low power and feature a thermal barrier coating to the gas washed surfaces. A number of IP NGVs have spokes that radiate from a central hub and are secured to the outer casing by bolts. The hub structure supports the HP/IP bearing housing.

Other IP NGVs contain tubes to take oil to and from the HP/IP roller bearings and IP8 cooling air to cool the housing.

A single IPNGV locates the front turbine cooling air detector. The detector is a thermocouple which senses the cooling air temperature at the front of the IPT disc/rear of the HPT disc and is called the Turbine Cooling Air Forward (TCAF) detector.

Located in the IPT casing, to the rear of the IPT blades are the LP1 NGVs. They consist of hollow triple span vane assemblies and locate 12 TGT thermocouples, plus the second turbine overheat detector. The overheat detector senses the temperature of the IP8 cooling air at the rear of the IPT disc and is called the Turbine Cooling Air Rear (TCAR) detector.

The IP turbine disc rim has ‘fir-tree’ serrations that locate the shrouded single crystal IP turbine blades. The blades are internally cooled with HP3 air that flows from root to tip. The internal and external aerofoil surfaces feature an aluminised coating, with the root shanks coated with platinum.

The IPT blades run in abradable seal segments that are internally cooled with HP3 air.

At the hub of the disc a drive arm extends rearwards to which the IP turbine shaft and stub shaft are bolted. The IPT stub shaft provides the inner race for the IPT rear roller bearing. The IP turbine shaft runs forward and is connected to the IP compressor stub shaft with helical splines.

Attached to the outer surface of the IPT casing and axially in line with the IPT blades, is the IPT case cooling manifold. Fan air from the manifold impinges on the casing, resulting in a reduction in turbine blade tip clearance, with subsequent improvement in performance.

© Rolls-Royce plc 2018 Use or disclosure is subject to the legend on the Notice to Holder page

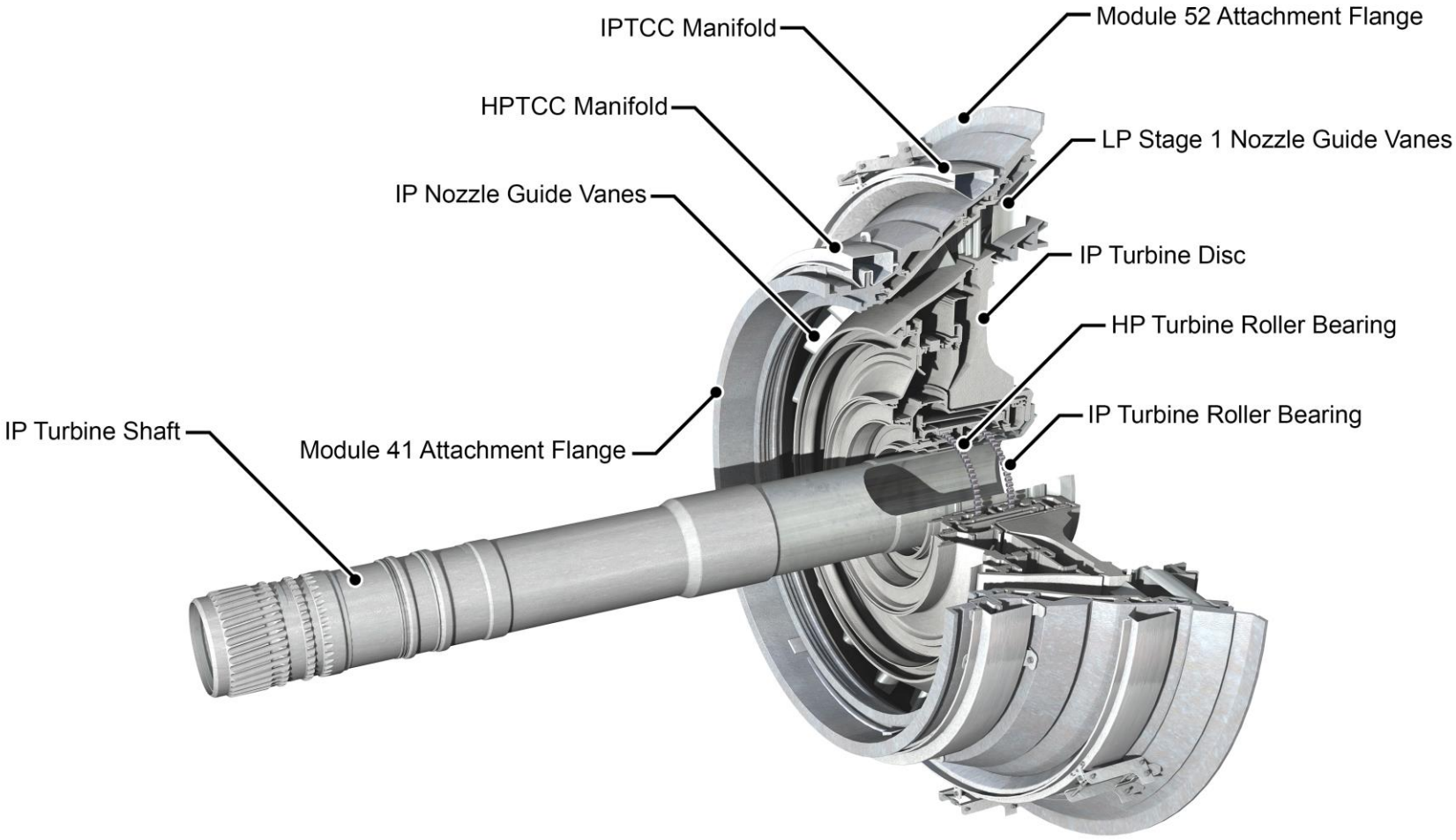

T1000 TEN_LBM_M04_053_01P

IP TURBINE MODULE (51)

© Rolls-Royce plc 2018 Use or disclosure is subject to the legend on the Notice to Holder page

LP Turbine Module (52)

Description

The LPT module consists of a 6-stage disc, blade and shaft assembly contained within an LP turbine casing, to which is bolted, the Tail Bearing Housing (TBH) support structure.

The LPT casing provides location for the LP Stage 2-6 NGVs and seal segments. The NGVs are solid and retained in circumferential slots in the LPT casing.

Blades from all six stages of the turbine are solid, welded in pairs and retained by 'fir-tree' roots. The blades are shrouded and feature seal fins that run in honeycomb lined seal segments.

Attached to the outer surface of the LPT casing and axially in line with the LPT blades, is the LPT case cooling manifold. Fan air from the manifold impinges on the casing, providing a reduction in turbine blade tip clearance, with subsequent improvement in performance.

The six individual LP turbine discs are bolted together and feature circumferential seal fins that act to control cooling air and hot gas leakage in the LP turbine.

The stage 5 disc includes a drive arm that attaches to the LP turbine shaft with a bolted curvic coupling. The LP turbine shaft goes forward through the centre of the IP shaft and connects with the LP compressor shaft with splines and a threaded nut.

The LP turbine stubshaft is attached at the same flange joint and provides radial support for the LP turbine roller bearing in the TBH.

The TBH support structure includes a hub, which is held concentric in an outer case by a number of radial hollow struts. The struts contain service tubes, which take oil and IP8 air to and from the bearing chamber.

The TBH struts also locate the sensor that measures LP temperature (T50). This parameter is used as part of the Engine Health Monitoring System (EHM).

The TBH struts also act as outlet guide vanes (OGVs) to straighten the annulus gas flow before it exits the engine.

The front flange of the TBH is bolted to the rear flange of the LP turbine case. The rear flange is bolted to the primary exhaust nozzle.

At the top of the TBH support structure are three integral mounting lugs, these are used to locate the rear engine mount.

© Rolls-Royce plc 2018 Use or disclosure is subject to the legend on the Notice to Holder page

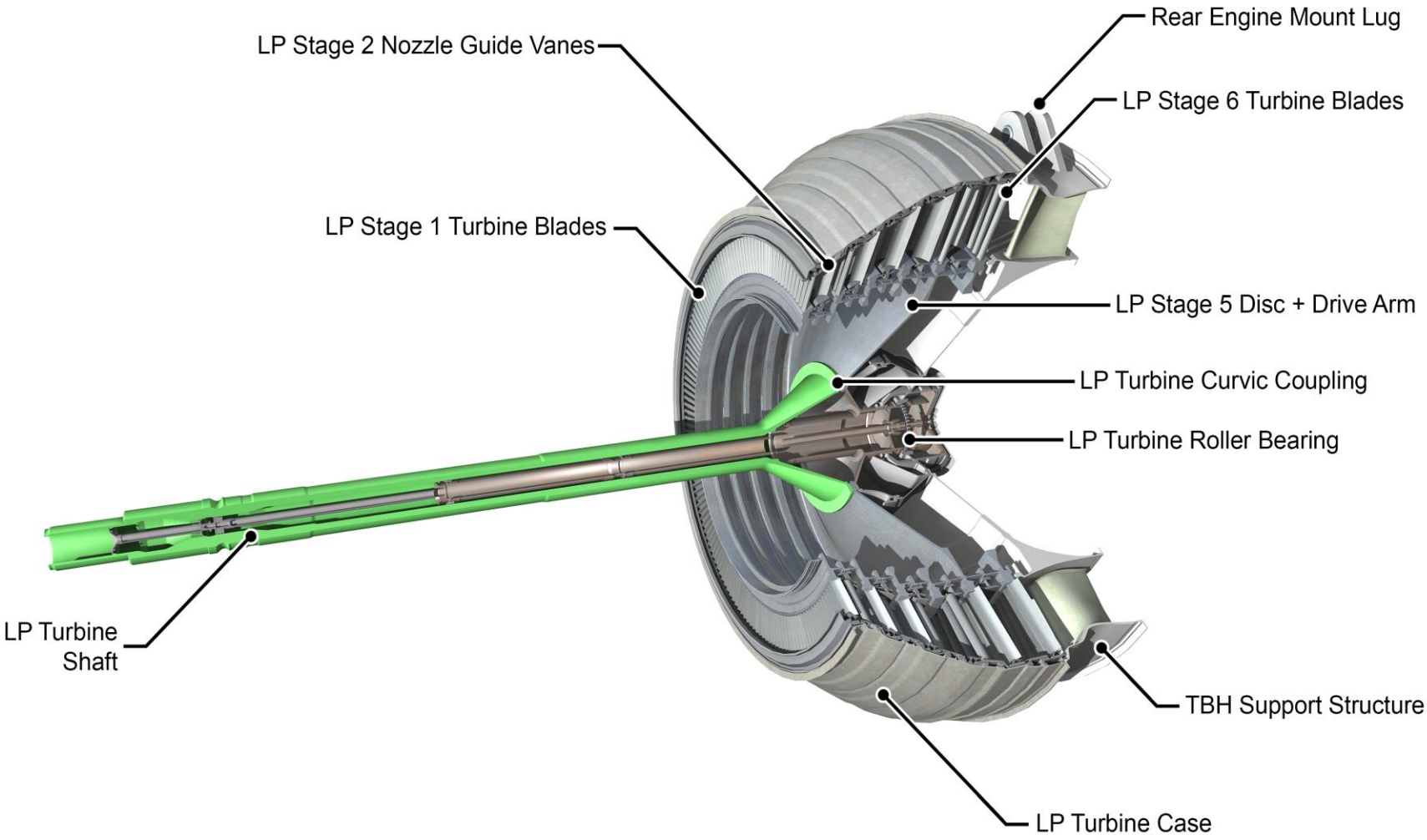

T1000 TEN_LBM_M04_054_01P

LP TURBINE MODULE (52)

© Rolls-Royce plc 2018. Use or disclosure is subject to the legend on the Notice to Holder page

External Gear Box (EGB) Module (61)

Description

The External Gearbox (EGB) is a cast aluminium housing installed on the lower part of the LP Compressor Case.

The EGB is mounted to the LP Compressor Case by a number of links and spherical bearings which provide a degree of flexibility for the EGB.

Rotational torque from the IP system is transmitted to the EGB via the Intermediate Gearbox and Radial Drive Shaft. The rotational torque is used to drive the accessory gear train inside the gearbox, which drives a total of seven accessories mounted on the EGB as follows:

Components Mounted on the Front Face driven by the EGB

- Permanent Magnet Alternator (PMA)
- Oil Pump Assembly
- One Hydraulic Pump
- Centrifugal Breather

Components Mounted on the Rear Face driven by the EGB

- Variable Frequency Starter Generator (VFSG) 1
- Variable Frequency Starter Generator (VFSG) 2

NOTE: (Number 1 is on the left and Number 2 is on the right as viewed from the rear).

- LP/HP Fuel Pump Assembly

During a ground engine start, power is transmitted from the two VFSGs, through the EGB to the Intermediate Gearbox via a drive shaft where it is transferred to a second drive shaft to rotate the IP System. Only one VFSG is used during an in-flight start.

The Centrifugal Breather housing provides a means of hand turning the IP rotor system for maintenance purposes.

The drive shafts for the gearbox-mounted accessories are sealed using air riding carbon seals.

All the accessory interfaces are protected by a drains system.

The following components are mounted to the gearbox but not driven by it:

- Drains Tank and Ejector
- Hydro-Mechanical Unit (HMU)

The HMU is mounted to a cover on the rear face of the EGB which has internally cored passages to which fuel flows between the Fuel Pump Assembly and the HMU.

© Rolls-Royce plc 2018. Use or disclosure is subject to the legend on the Notice to Holder page

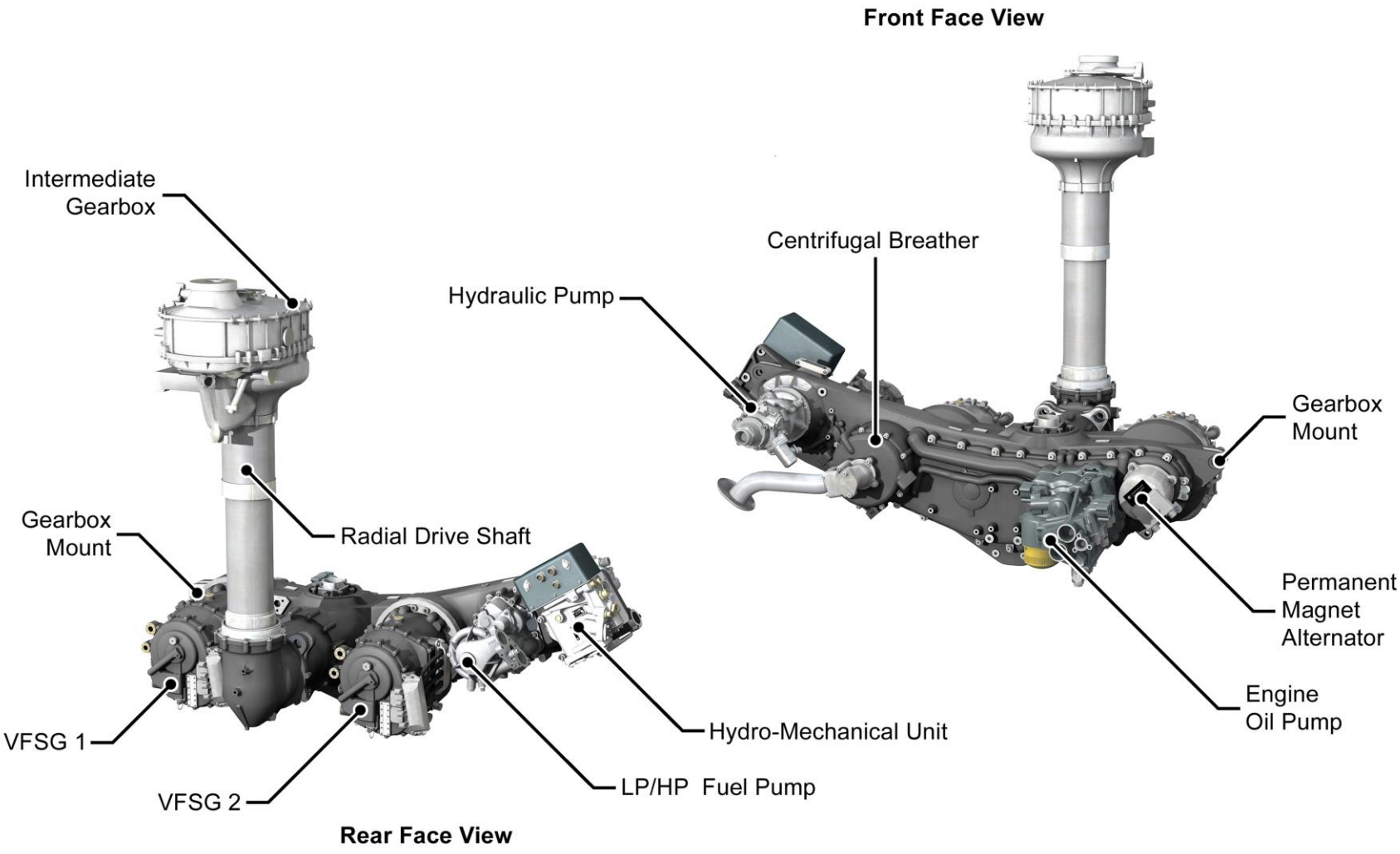

T1000 TEN_LBM_M04_055_01P

EXTERNAL GEARBOX MODULE (61)

© Rolls-Royce plc 2018. Use or disclosure is subject to the legend on the Notice to Holder page

Intermediate Gearbox Module (62)

The Intermediate Gearbox is located within two titanium housings and is attached to the Intermediate Case at the 6 o'clock position. The intermediate Gearbox has two main functions:

- To transfer torque from the IP system to the EGB during engine running,
- To transfer torque from the VFSGs to the IP system during the engine start sequence.

Engine Starting

In order to start the engine the IP system must be rotated by the starting system. This is achieved by the VFSGs transferring rotational torque to the EGB which rotates the radial drive shaft and the Intermediate Gearbox.

Helical gears transfer the rotational torque to IP Drive Shaft which, via a bevel gear arrangement at the rear of the IP stub shaft inside the Internal Gearbox (IGB the IP System), rotates the IP system to induce air to start the engine.

Engine Running

During usual engine running the VFSGs act as generators and so the driving force acts in the opposite direction to that used for starting as follows:

The IP system rotates the IP Drive Shaft from the rear of the IP stub shaft inside the Internal Gearbox which in turn rotates the bevel gears in the Intermediate Gearbox and thus the Radial Drive Shaft and the EGB.

Intermediate Gearbox Housing

The two Titanium housings are bolted together and located to the Intermediate case by a second bolted flange. A seal arrangement prevents oil loss between the Intermediate Case and the Intermediate Gearbox.

The upper housing has provision for the oil inlet tube and the lower housing has provision for the scavenge port which returns oil from the gearbox to a dedicated Scavenge Pump in the Oil Pump Assembly.

To aid identification of any vibration issues with the Radial Driveshaft and Intermediate Gearbox a vibration transducer is mounted to the outer surface of the lower housing on the left side. This transducer does not display any vibration details to the Flight Deck and the information provided is used for troubleshooting only.

© Rolls-Royce plc 2018. Use or disclosure is subject to the legend on the Notice to Holder page

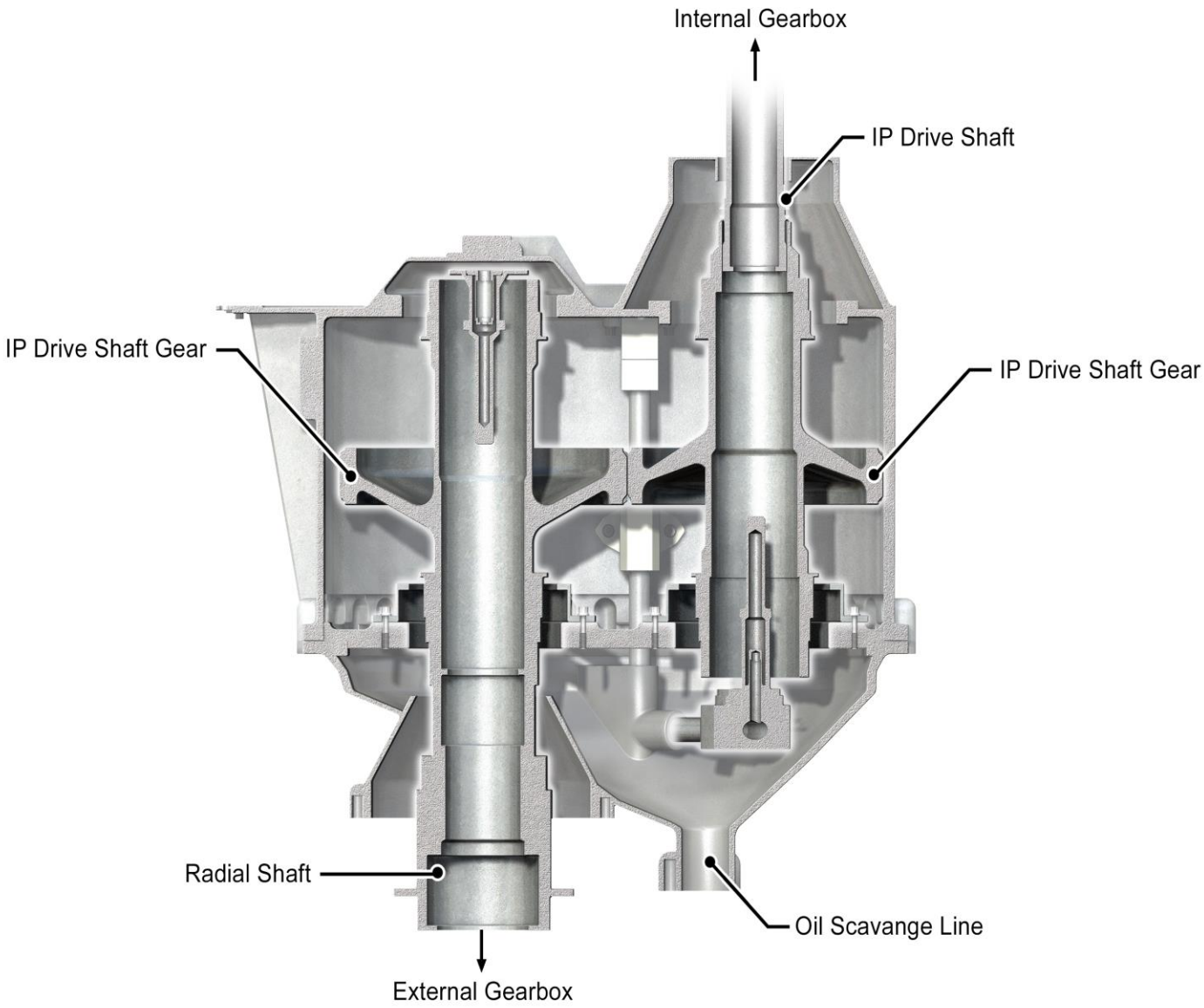

T1000 TEN_LBM_M04_056_01P

INTERMEDIATE GEARBOX MODULE (62)

© Rolls-Royce plc 2018. Use or disclosure is subject to the legend on the Notice to Holder page

LP Compressor Case (Non-Modular)

Description

The LP compressor casing assembly consists of four sub-assemblies and is a non-modular assembly:

- The Containment (front) case
- The Front Mount Ring & Fan Outlet Guide Vanes
- The Rear Fan Case

Containment (Front) Case Assembly

The containment system is designed to absorb the energy of a fan blade release and contain the debris within the confines of the engine.
The containment case consists of forged titanium ring with three circumferential stiffening ribs to provide reinforcement in the area of the fan track.
The inner surface of the containment case features the forward and rear acoustic panels with an abradable fan track liner in between.
Immediately rearwards of the forward acoustic panels is the blade containment hook. The hook is integral to the containment case and is designed to prevent forward exit of fan blade in the unlikely event of a fan blade failure.

Front Mount Ring & Fan Outlet Guide Vanes

The titanium front mount ring is bolted between the containment case and the rear fan case. The Fan Outlet Guide Vanes (FOGVs) are bolted to the front mount ring. The hollow FOGVs are welded at their inner platform to a titanium inner ring, which is then bolted to the IP compressor FBH. This structure provides radial support for the LP compressor case assembly and aerodynamic control to the airflow entering the bypass duct. The engine front mount is located to integral lugs at the top of the front mount ring.

Rear Fancase

The titanium rear fancase is bolted to the front mount ring. The lower inner surface of the rear fancase feature recesses for the left and right fin type VFSG Surface Air Oil Heat Exchangers (SAOHEs).

The upper rear fancase also features apertures for two fin-type engine EOSCs (Engine Oil Surface Coolers) on its inner surface.

At the rear of the OGVs are located acoustic panels which are mechanically secured to the inside surface of the Rear Fan Case.

LP Compressor Case Supports (termed as A Frame Supports) locate between the Rear Fan Case and the Intermediate Case and provide torsional stability.

Finally, at the rear of the Rear Fan Case is a v-groove that provides location for the v-blade located at the front of the Thrust Reverser Unit (TRU).

© Rolls-Royce plc 2018. Use or disclosure is subject to the legend on the Notice to Holder page

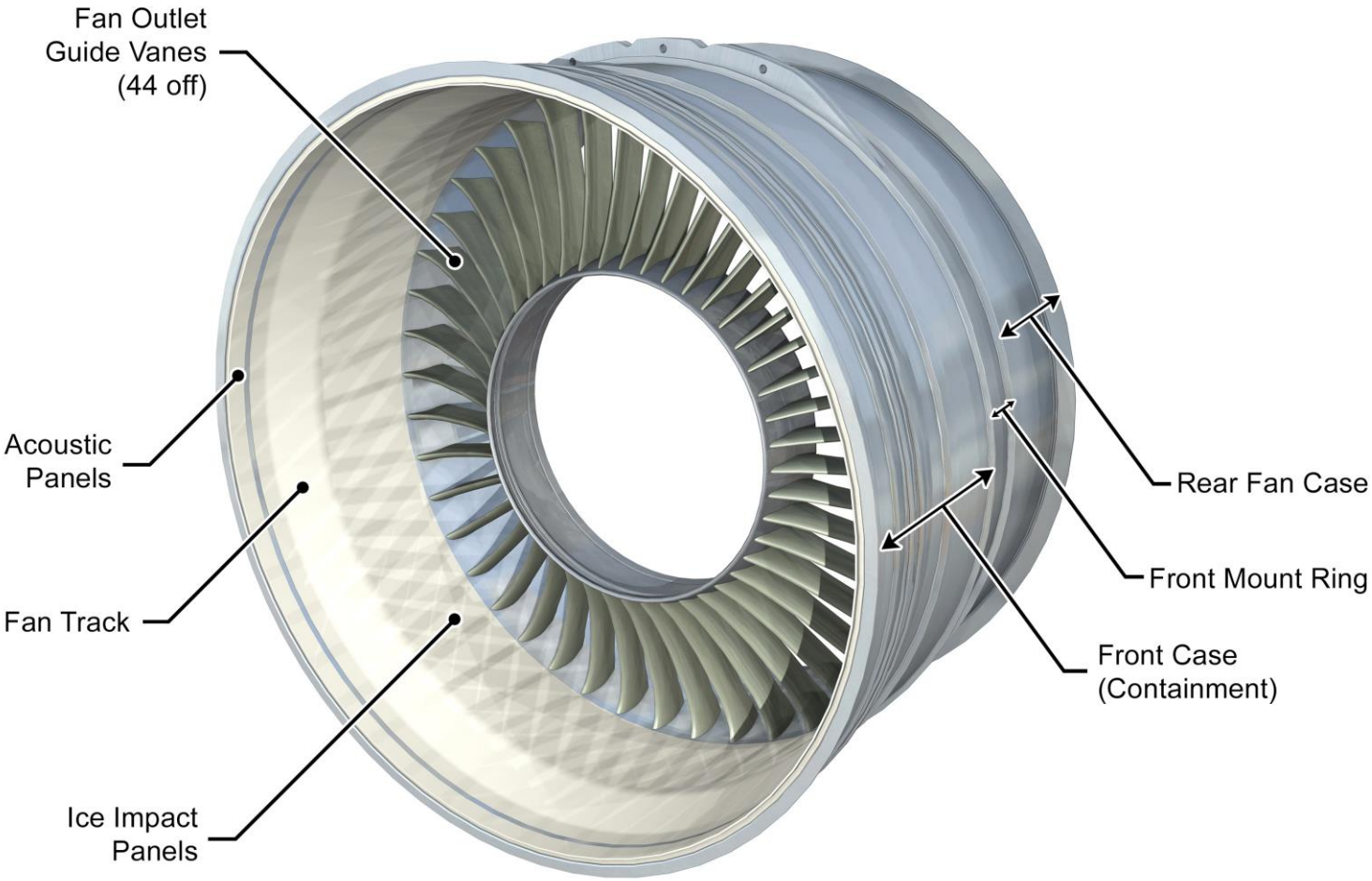

T1000 TEN_LBM_M04_058_01P

LP COMPRESSOR CASE (NON MODULAR)

© Rolls-Royce plc 2018. Use or disclosure is subject to the legend on the Notice to Holder page

Engine Components – Left Side

The following components are located on or are visible on the left side of the engine:

Fire Zone 1 (Fan Case)

- EEC incorporating the DEP.
- Engine Monitoring Unit (EMU).
- Two Igniter Boxes.
- Zone 1 Fire and Overheat Detector.
- Number 1 VFSG Thermal By-Pass Valve (TBV).
- Number 1 VFSG Surface Air Oil Heat Exchanger (SAOHE)
- Forward Engine Mount
- Fan Engine Anti-Ice Valve.
- Duct Leak Overheat Detector.
- Two Engine Oil Surface Coolers (EOSC).

Zone 2 (Under the Core Fairings)

- Two IP8 Engine Handling Bleed Valves.
- 4 pot Solenoid Bank.
- Left VIGV/VSV Actuator.
- Intermediate Case Vibration Transducer.
- Zone 2 Fire and Overheat Detectors.
- Modulating Air System (MAS) Valves
- HP and IP Turbine Case Cooling Actuators

Zone 3 (The Core)

- One HP3 Engine Handling Bleed Valve.
- Left Igniter Plug.
- 9 Fuel Spray Nozzles & Fuel Manifold.
- HP/IP TCC Valve.
- LP TCC Valve.
- Intermediate Gearbox Vibration Transducer.
- HP Speed (N3) Speed Probe.
- 6 TGT Thermocouples.
- Turbine Overheat Detector (TCAF and TCAR).
- Rear Engine Mount and Thrust Links.
- T50 probe.
- Core Engine Anti Ice Valve.
- Engine Anti-Ice Valve Controller
- Vortex Amplifier

Underside

- External Gearbox (for units see page 4-24)
- Drains Mast.

© Rolls-Royce plc 2018. Use or disclosure is subject to the legend on the Notice to Holder page

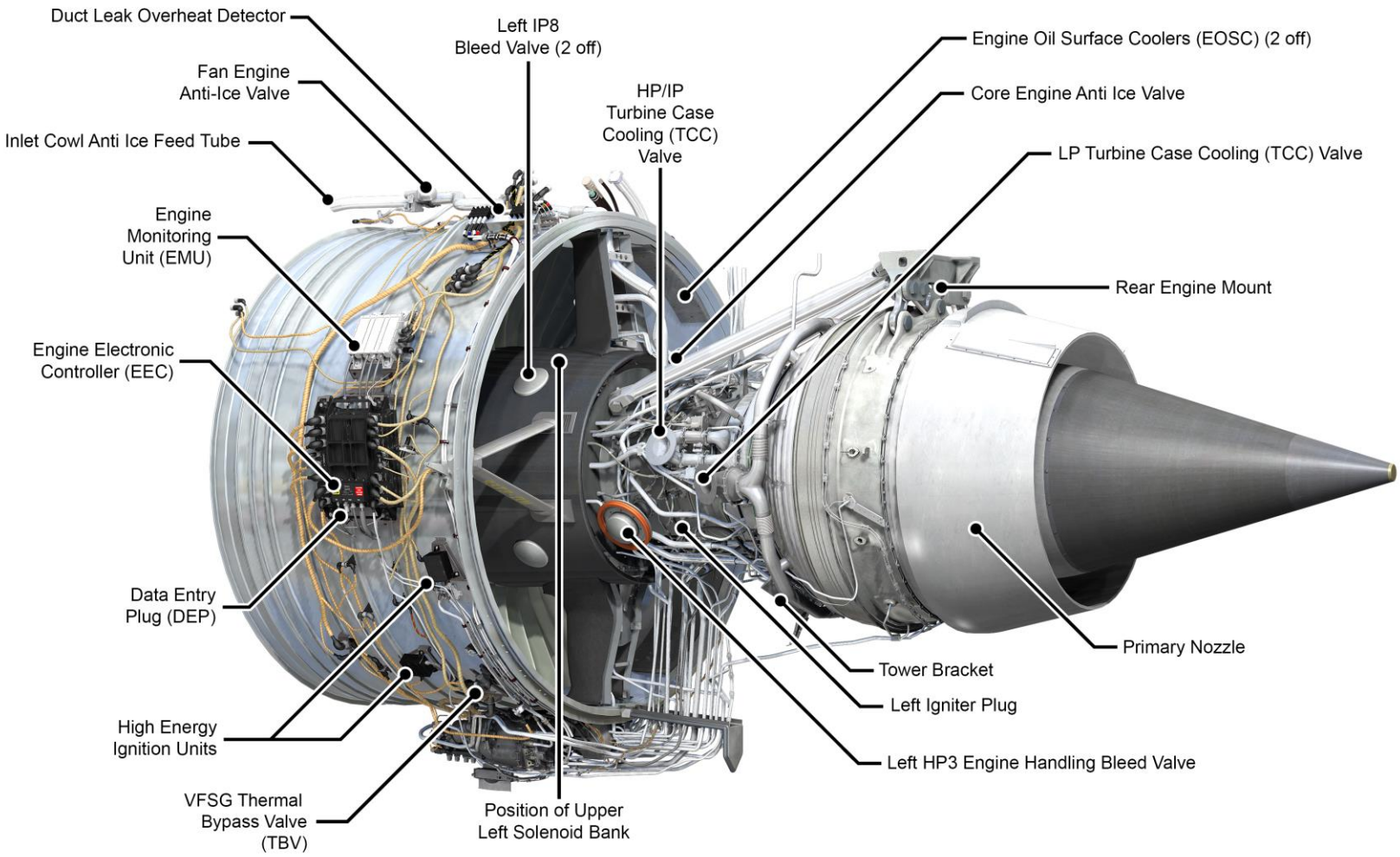

T1000 TEN_LBM_M04_059_02P

ENGINE COMPONENTS – LEFT SIDE

© Rolls-Royce plc 2018. Use or disclosure is subject to the legend on the Notice to Holder page

Engine Components – Right Side

The following components are located or are visible on the right side of the engine:

Fire Zone 1 (The Fan Case)

- Zone 1 Fire and Overheat Detector.
- Number 2 VFSG AOHE.
- Oil tank, including the Oil Quantity Transmitter.
- Oil Debris Monitoring System (ODMS) & Scavenge Filter Housing incorporating the Oil Debris Sensor and the Scavenge Filter Differential Pressure Transducer.
- Engine Fuel Oil Heat Exchanger (FOHE) incorporating the LP Fuel Filter, the LP Fuel Filter Differential Pressure Transducer and the Oil Temperature Sensor and the Oil Pressure Transducer.
- Oil Debris Signal Conditioner.
- Oil Bypass Valve (OBV).
- Engine Fuel Temperature Sensor.
- Forward Engine Mount.
- Fuel Flow Transmitter.
- Number 2 VFSG Thermal By-Pass Valve (TBV).
- Number 2 VFSG Surface Air Oil Heat Exchanger (SAOHE)

Zone 2 (Under the Core Fairings)

- One IP8 Engine Handling Bleed Valve.
- 5 pot Solenoid Bank.
- 2 pot Solenoid Bank
- Right VIGV/VSV actuator.
- Intermediate Case Vibration Transducer.
- Zone 2 Fire and Overheat Detectors.
- Engine Section Stators (ESS) Anti-Ice Valve

Zone 3 (The Core)

- One HP3 Engine Handling Bleed Valve.
- Right Igniter Plug.
- 9 Fuel Spray Nozzles & Fuel Manifold.
- Intermediate Gearbox Vibration Transducer.
- HP Speed (N3) Speed Probe.
- 6 TGT Thermocouples.
- Turbine Overheat Detector (TCAR).
- Secondary Air System Valve (SASV).
- Rear Engine Mount and Thrust Links.
- Vortex Amplifiers

Underside

- External Gearbox (for units see page 4-24)
- Drains Mast.

© Rolls-Royce plc 2018. Use or disclosure is subject to the legend on the Notice to Holder page

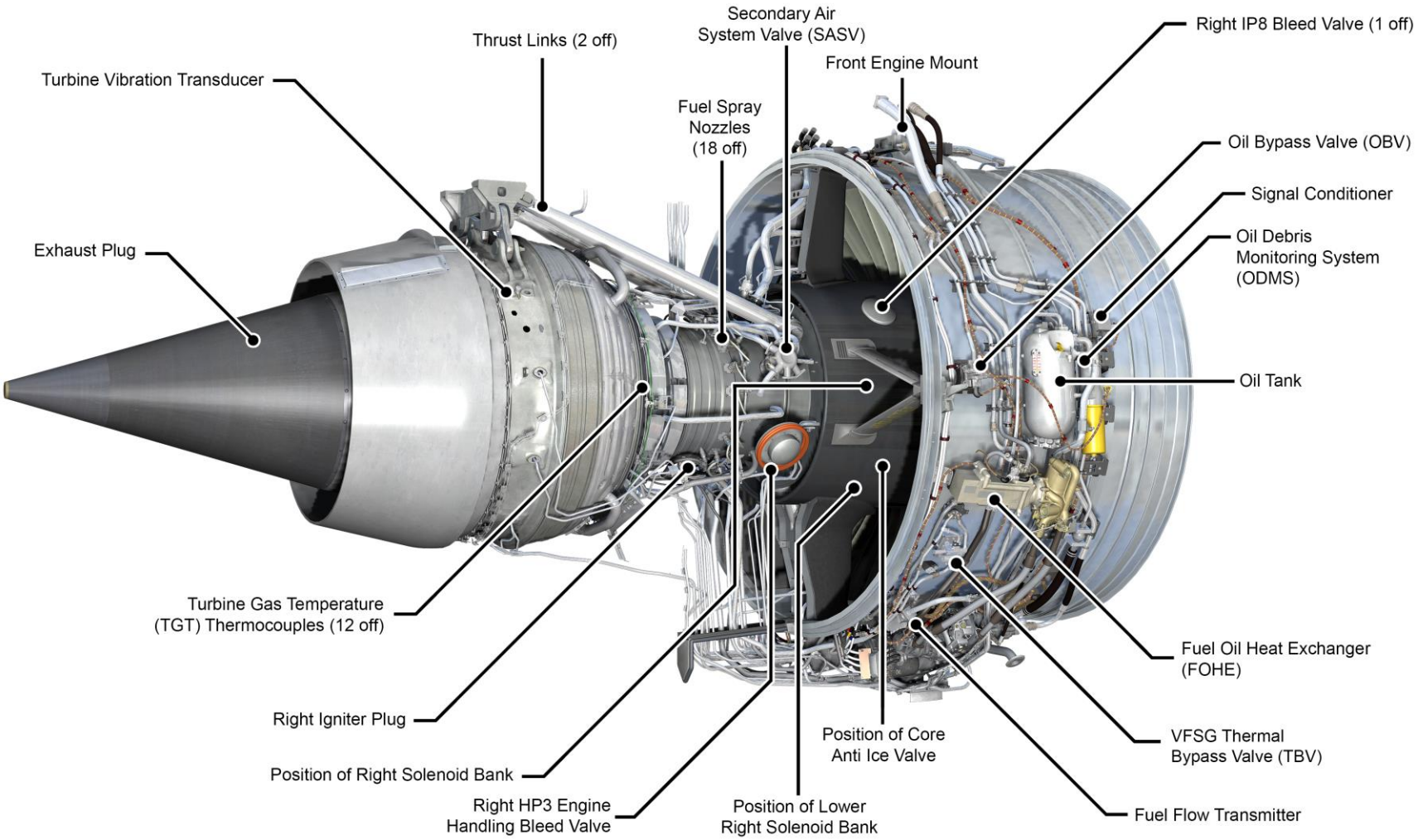

T1000 TEN_LBM_M04_060_02P

ENGINE COMPONENTS – RIGHT SIDE

© Rolls-Royce plc 2018. Use or disclosure is subject to the legend on the Notice to Holder page

Borescope Access

Borescope Plug Location

With the engine installed to the wing internal inspections can be carried out using specialized borescope equipment. To accomplish this, the engine has a total of 27 borescope access ports on the right side of the engine as listed below:

LP Compressor

There are no borescope access ports on the LP Compressor as it can be visually inspected from the front of the engine.

IP Compressor

There are 8 borescope access ports for the IP Compressor:

Stage 1 leading edge – Through front of the IP Compressor

IP1S – Trailing edge stage 1 / leading edge stage 2

IP2S – Trailing edge stage 2 / leading edge stage 3

IP3S – Trailing edge stage 3 / leading edge stage 4

IP4S – Trailing edge stage 4 / leading edge stage 5

IP5S – Trailing edge stage 5 / leading edge stage 6

IP6S – Trailing edge stage 6 / leading edge stage 7

IP7S – Trailing edge stage 7 / leading edge stage 8

IP8S – Trailing edge stage 8 only.

HP Compressor

There are 5 borescope access ports for the HP Compressor:

HP1 – Leading edge stage 1 only

HP1/HP2 - Trailing edge stage 1 / leading edge of stage 2

HP2 – Trailing edge stage 2 / leading edge stage 3

HP3 – Trailing edge stage 3 / leading edge stage 4

HP4 – Trailing edge stage 4 / leading edge stage 5

Combustion Chamber / HP Nozzle Guide Vanes (HP NGV)

There are 6-borescope access ports positioned around the circumference of the combustion outer case to allow inspection of the combustion chamber and the HP NGV's.

HP NGV.

A single borescope access port at the front of the HP/IP Case at the 3 o'clock position allows the HP Turbine leading edge to be inspected.

HP Turbine / IP Turbine

A single borescope access port at the rear of the HP/IP Case at the 3 o'clock position allows the HP Turbine trailing edge and the IP Turbine leading edge to be inspected.

LP Turbine

There are 6 borescope access ports for the LP Turbine:

LP1 – Trailing edge IP Turbine / leading edge LPT 1

LP2 – Trailing edge LPT 1 / leading edge LPT 2

LP3 – Trailing edge LPT 2 / leading edge LPT 3

LP4 – Trailing edge LPT 3 / leading edge LPT 4.

LP5 – Trailing edge LPT 4 / leading edge LPT 5

LP6 – Trailing edge LPT 5 / leading edge LPT 6

The trailing edge of LPT stage 6 is accessed through the exhaust case.

© Rolls-Royce plc 2018. Use or disclosure is subject to the legend on the Notice to Holder page

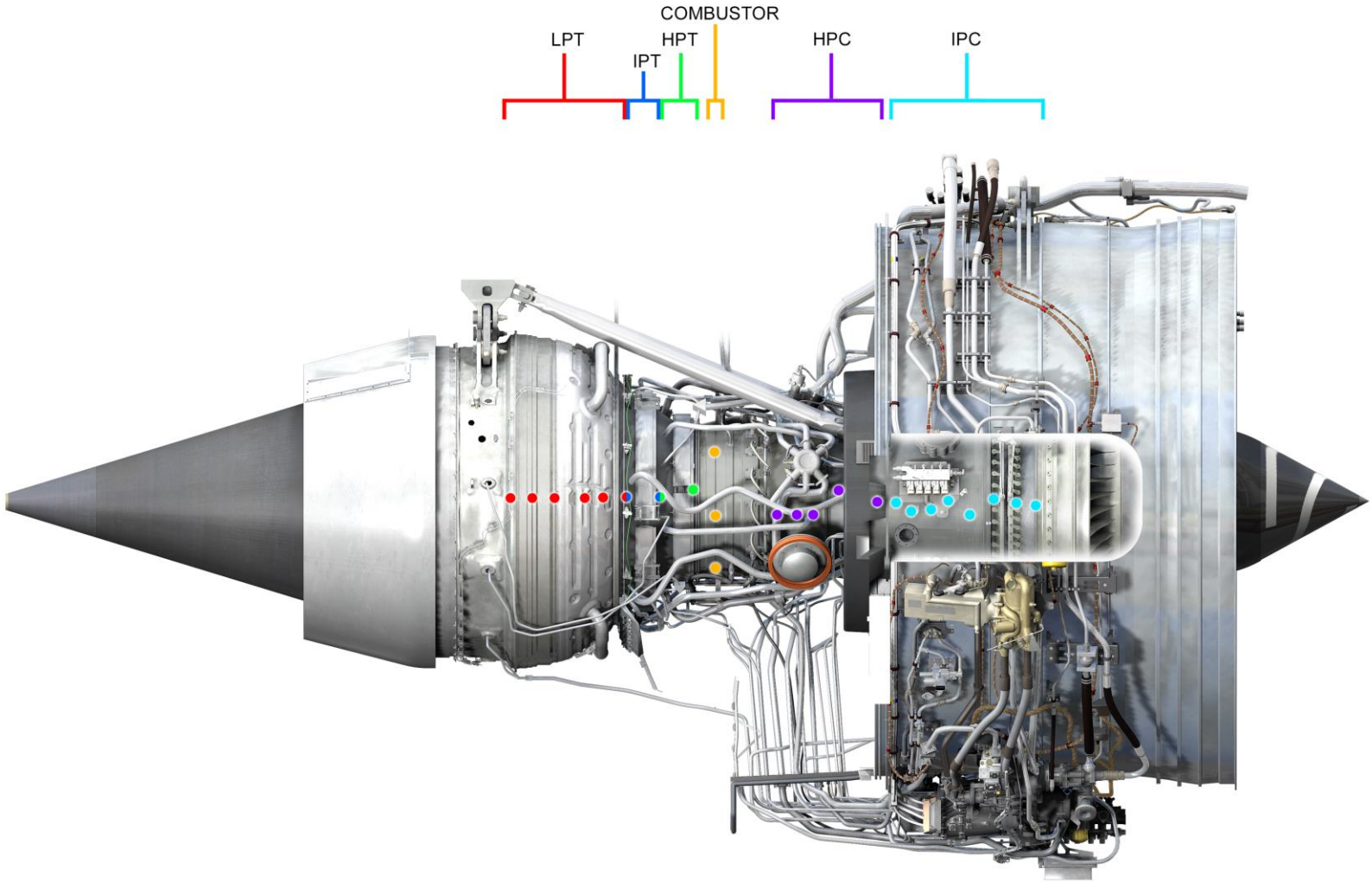

T1000 TEN_LBM_M04_061_01P

BORESCOPE ACCESS POSITIONS

© Rolls-Royce plc 2018. Use or disclosure is subject to the legend on the Notice to Holder page

Maintenance Practices

Borescope Plug Removal and Installation

IP Compressor Borescope Plugs

The following is a brief description of these tasks. Refer to the AMM for the full description and the relevant OMSD for the correct use of any specialised tooling.

It is possible to inspect the leading edge of the IPC Stage 1 through the front of the engine. The remaining stages of the IP Compressor may be inspected through the eight borescope access holes.

Identification of the types of damage can be found in the standard practices section (B787-A-R70-01-02-00A-030A-A)

WARNING

BE CAREFUL WHEN YOU DO WORK ON THE ENGINE PARTS AFTER THE ENGINE IS STOPPED. THE ENGINE PARTS CAN STAY HOT FOR ALMOST ONE HOUR. DO NOT TOUCH HOT PARTS WITHOUT APPLICABLE GLOVES. HOT PARTS CAN CAUSE INJURIES TO PERSONNEL.

CAUTION

MAKE SURE YOU OBEY THE TEMPERATURE LIMITS FOR THE BORESCOPE EQUIPMENT AS SPECIFIED BY THE MANUFACTURERS INSTRUCTIONS. IF YOU START THE BORESCOPE PROCEDURE AND THE ENGINE IS TOO HOT, DAMAGE TO THE EQUIPMENT CAN OCCUR.

Removal (AMM Task B787-A-R72-00-00-32D-520A-A)

1. Ensure the Thrust Reverser has been deactivated for ground maintenance.
2. Open the Fan Cowl Doors
3. Open the right side Thrust Reverser C-duct.
4. Remove the right side upper and centre core fairings.
5. For the IP1S and IP2S, hold the borescope plug, remove the bolts and carefully remove the blanking plug.
6. For the remainder of the IP borescope plugs use a 6.35mm (0.250 in) square drive for removal.

Installation (AMM Task B787-00-00-32D-720A-A)

1. Clean the mating faces and threads of the blanking plugs, and the IP Compressor Case (AMM TASK B787-A-R70-20-01-00A-258A-A)
2. Lubricate the bolts of the blanking plug (AMM TASK B787-A-R70-51-00-00A-950A-A)

CAUTION

DO NOT USE THE BOLTS THAT HOLD THE BLANKING PLUG INTO ITS POSITION. IF YOU USE THE BOLTS TO PULL THE PLUG INTO ITS POSITION, DAMAGE TO THE PLUG OR ENGINE CAN OCCUR.

3. Install the blanking plug and torque load the bolts to the figure obtained from the AMM.

NOTE: IP5S and IP7S are locked by a tab washer.

The damage accept and reject standards can be found in the AMM.

© Rolls-Royce plc 2018. Use or disclosure is subject to the legend on the Notice to Holder page

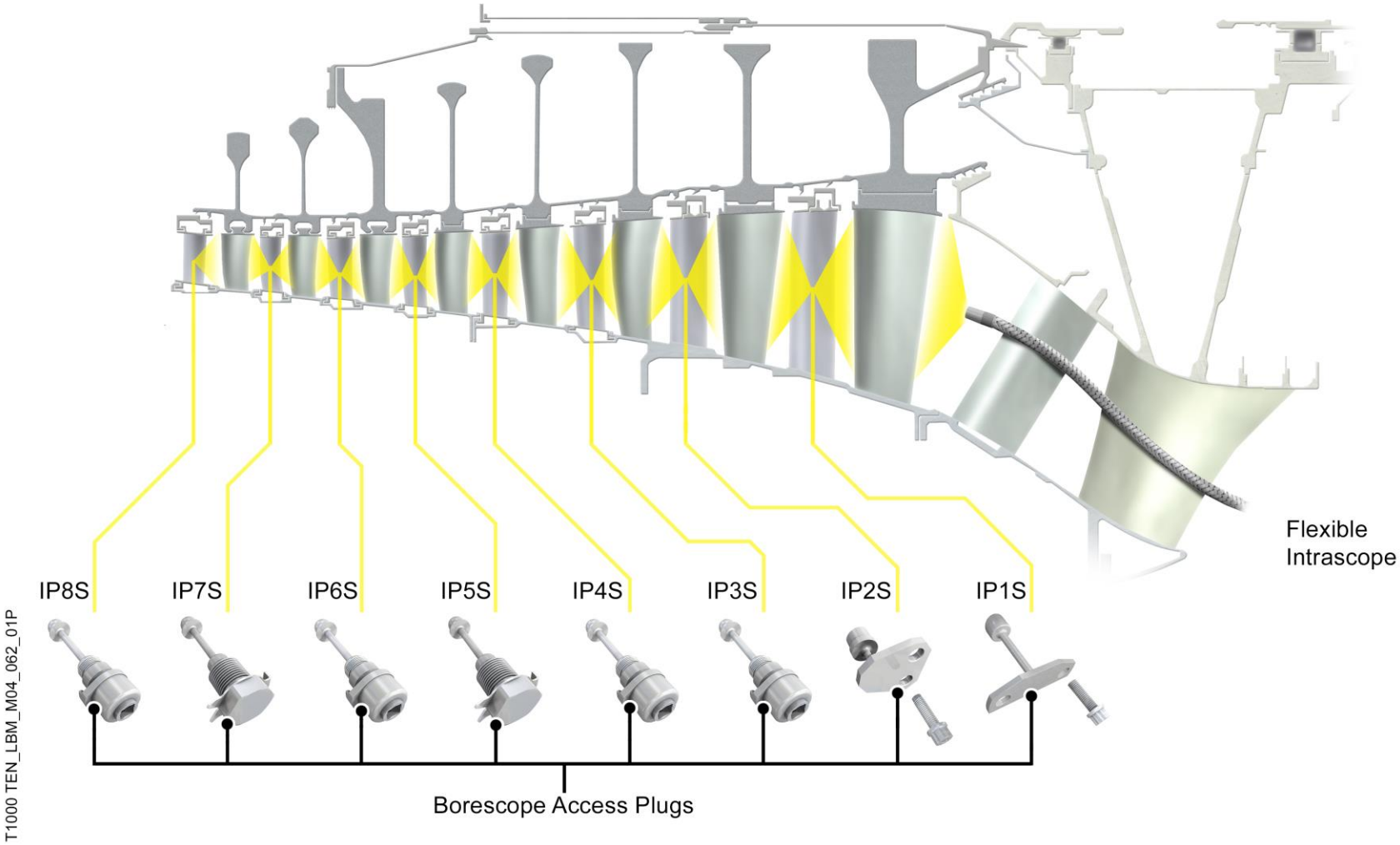

IP COMPRESSOR BORESCOPE PLUGS

© Rolls-Royce plc 2018. Use or disclosure is subject to the legend on the Notice to Holder page

Maintenance Practices

Borescope Plug Removal and Installation

HP Compressor Borescope Plugs

The following is a brief description of these tasks. Refer to the AMM for the full description and the relevant OMSD for the correct use of any specialised tooling.

The HP Compressor can be inspected through five borescope access holes. All stages can be inspected except for the rear edge of stage five and the front and rear edge of stage six.

The damage accept and reject standards can be found in the AMM.

Identification of the types of damage can be found in the standard practices section (B787-A-R70-01-02-00A-030A-A)

The warnings and cautions relating to the temperature of the engine are the same as the IP Compressor.

Removal (AMM Task B787-A-R72-00-00-32D-520A-A)

1. Ensure the Thrust Reverser has been deactivated for ground maintenance.
2. Open the Fan Cowl Doors.
3. Open the right side Thrust Reverser C-duct.
4. Hold the blanking plug and remove the bolts.
5. Carefully remove the blanking plug.
6. HP1, HP2 and HP4 blanking plugs may need an EXTRACTOR, IMPACT (HU29255) and EXTRACTOR, ADAPTOR (HU51166) to remove the blanking plug.
7. The HP3 blanking plug requires a 6.35mm (0.250 in) square drive for removal.

Installation (AMM Task B787-00-00-32D-720A-A)

1. Clean the mating faces and threads of the blanking plugs, and the HP Compressor Case (AMM TASK B787-A-R70-20-01-00A-258A-A).
2. Lubricate the bolts of the blanking plug (AMM TASK B787-A-R70-51-00-00A-950A-A)

CAUTION

MAKE SURE YOU ONLY APPLY A THIN LAYER OF THE ANTISEIZE COMPOUND. IF YOU APPLY TOO MUCH ANTI-SIEZE COMPOUND IT CAN GO INTO THE ENGINE AND CAN CAUSE DAMAGE.

3. Install the blanking plug and torque load the bolts to the figure obtained from the AMM.
4. The HP3 blanking plug requires a 6.35 mm (0.250 in) square drive to install the plug. Turn the plug clockwise until the spigot engages into one of the two holes and carry on turning until continuous clicks are heard.
5. Torque tighten the HP3 blanking plug and all blanking plug attachment bolts to the torque figures in the AMM.

© Rolls-Royce plc 2018. Use or disclosure is subject to the legend on the Notice to Holder page

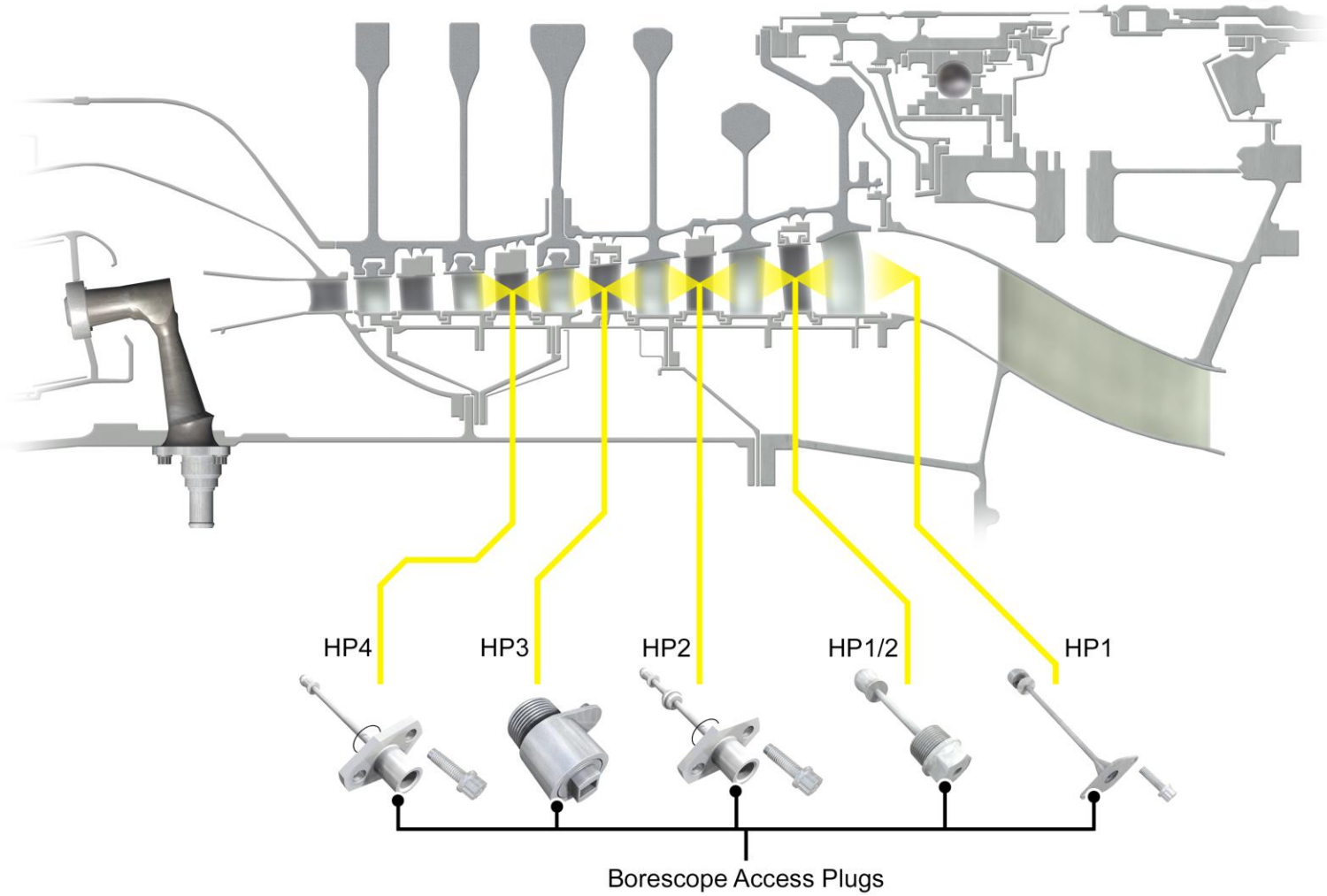

T1000 TEN_LBM_M04_063_01P

HP COMPRESSOR BORESCOPE PLUGS

© Rolls-Royce plc 2018. Use or disclosure is subject to the legend on the Notice to Holder page

Maintenance Practices

Borescope Plug Removal and Installation

Combustion Chamber

The following is a brief description of these tasks. Refer to the AMM for the full description and the relevant OMSD for the correct use of any specialised tooling.

The Combustion Chamber can be inspected using six (6) borescope access holes.

The damage accept and reject standards can be found in the AMM.

Identification of the types of damage can be found in the standard practices section (B787-A-R70-01-02-00A-030A-A)

The warnings and cautions relating to the temperature of the engine are the same as the IP Compressor.

NOTE: Removal of the Combustion Chamber blanking plugs will allow inspection of the Combustion Chamber, Fuel Spray Nozzles (FSN's) and the HP Nozzle Guide Vanes (HP NGV's).

Removal (AMM Task B787-A-R72-00-00-32D-520A-A)

1. Ensure the Thrust Reverser has been deactivated for ground maintenance.
2. Open the Fan Cowl Doors.
3. Open the right side Thrust Reverser C-duct.
4. Use a 6.35mm (0.250 in) square drive to remove the borescope plugs.

Installation (AMM Task B787-00-00-32D-720A-A)

1. Clean the mating faces of the blanking plug and the engine casing (AMM TASK B787-A-R70-20-01-00A-258A-A).
2. Use a brush to apply a thin layer of high temperature anti-seize compound to the mating surfaces of the blanking plug and the combustion outer case.
3. Place borescope plug in position and using a 6.35 mm (0.250 in) square drive turn the plug clockwise until the spigot engages into one of the two holes. Carry on turning until continuous clicks are heard.
4. Torque tighten the HP3 blanking plug and all blanking plug attachment bolts to the torque figures in the AMM.

© Rolls-Royce plc 2018. Use or disclosure is subject to the legend on the Notice to Holder page

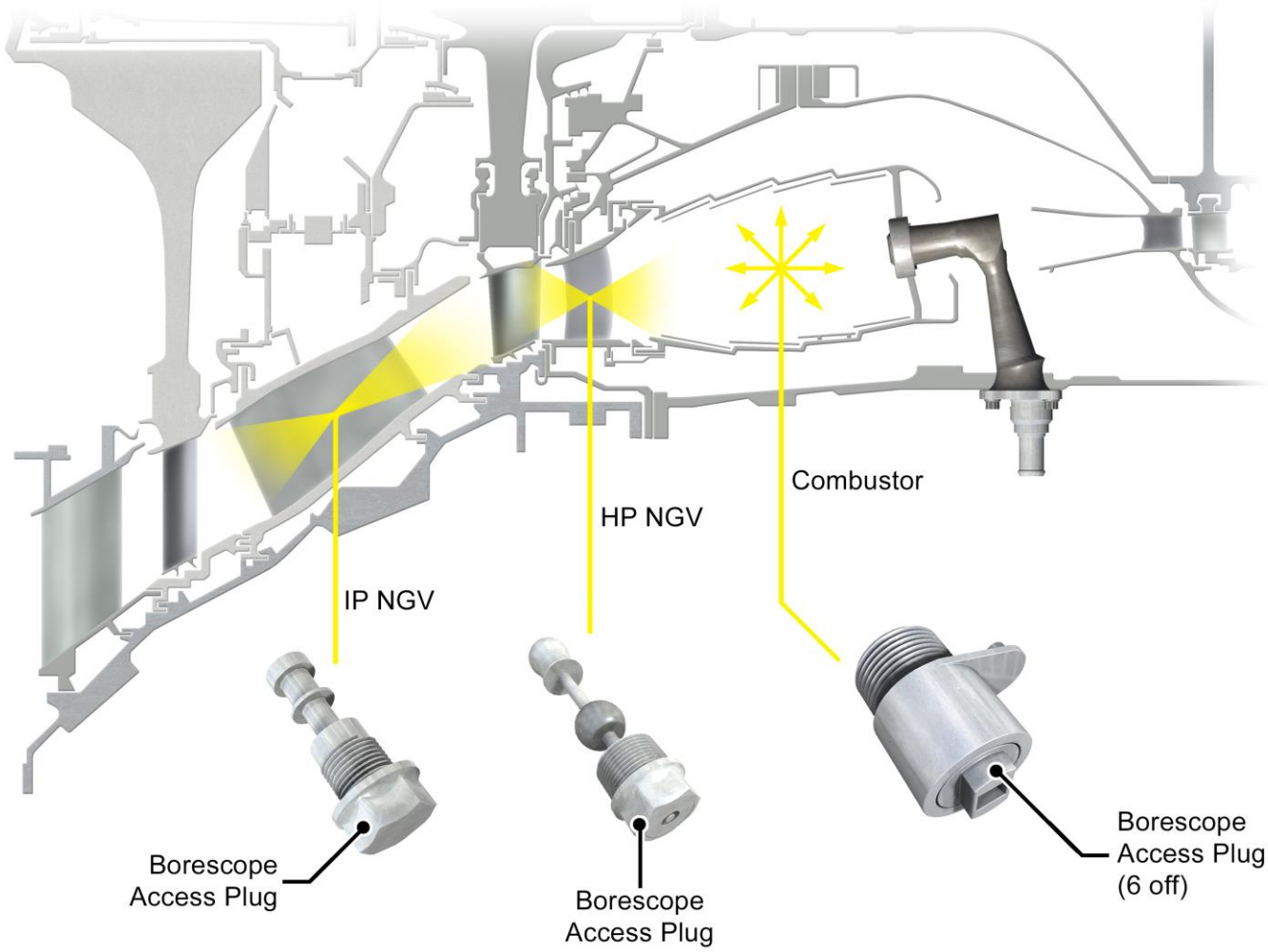

T1000 TEN_LBM_M04_064_01P

COMBUSTOR BORESCOPE PLUGS

© Rolls-Royce plc 2018. Use or disclosure is subject to the legend on the Notice to Holder page

Maintenance Practices

Borescope Plug Removal and Installation

HP NGV Blanking Plug

The following is a brief description of these tasks. Refer to the AMM for the full description and the relevant OMSD for the correct use of any specialised tooling.

The leading edge of the HP Turbine Blade can be inspected through the HP NGV Borescope access hole. The trailing edge of the HP Turbine Blade can be inspected through the IP NGV Borescope access hole.

The damage accept and reject standards can be found in the AMM.

Identification of the types of damage can be found in the standard practices section (B787-A-R70-01-02-00A-030A-A)

The warnings and cautions relating to the temperature of the engine are the same as the IP Compressor.

Removal (AMM Task B787-A-R72-00-00-32D-520A-A)

1 Ensure the Thrust Reverser has been deactivated for ground maintenance.

2 Open the Fan Cowl Doors.

3 Open the right side Thrust Reverser C-duct.

4 Remove the blanking plug.

Installation (AMM Task B787-00-00-32D-720A-A)

1 Clean the mating faces of the blanking plug and the HP/IP Turbine Case (AMM TASK B787-A-R70-20-01-00A-258A-A).

2 Use a brush to apply a thin layer of high temperature anti-seize compound to the threads of the blanking plug.

CAUTION

MAKE SURE YOU ONLY APPLY A THIN LAYER OF ANTISEIZE COMPOUND. IF YOU APPLY TOO MUCH ANTISEIZE COMPOUND IT CAN GO INTO THE ENGINE AND CAN CAUSE DAMAGE.

3 Install the blanking plug.

4 The HP NGV blanking plug has a central rod that is used to align the plug end into its location.

5 Torque load the blanking plugs to the figure obtained from the AMM.

© Rolls-Royce plc 2018. Use or disclosure is subject to the legend on the Notice to Holder page

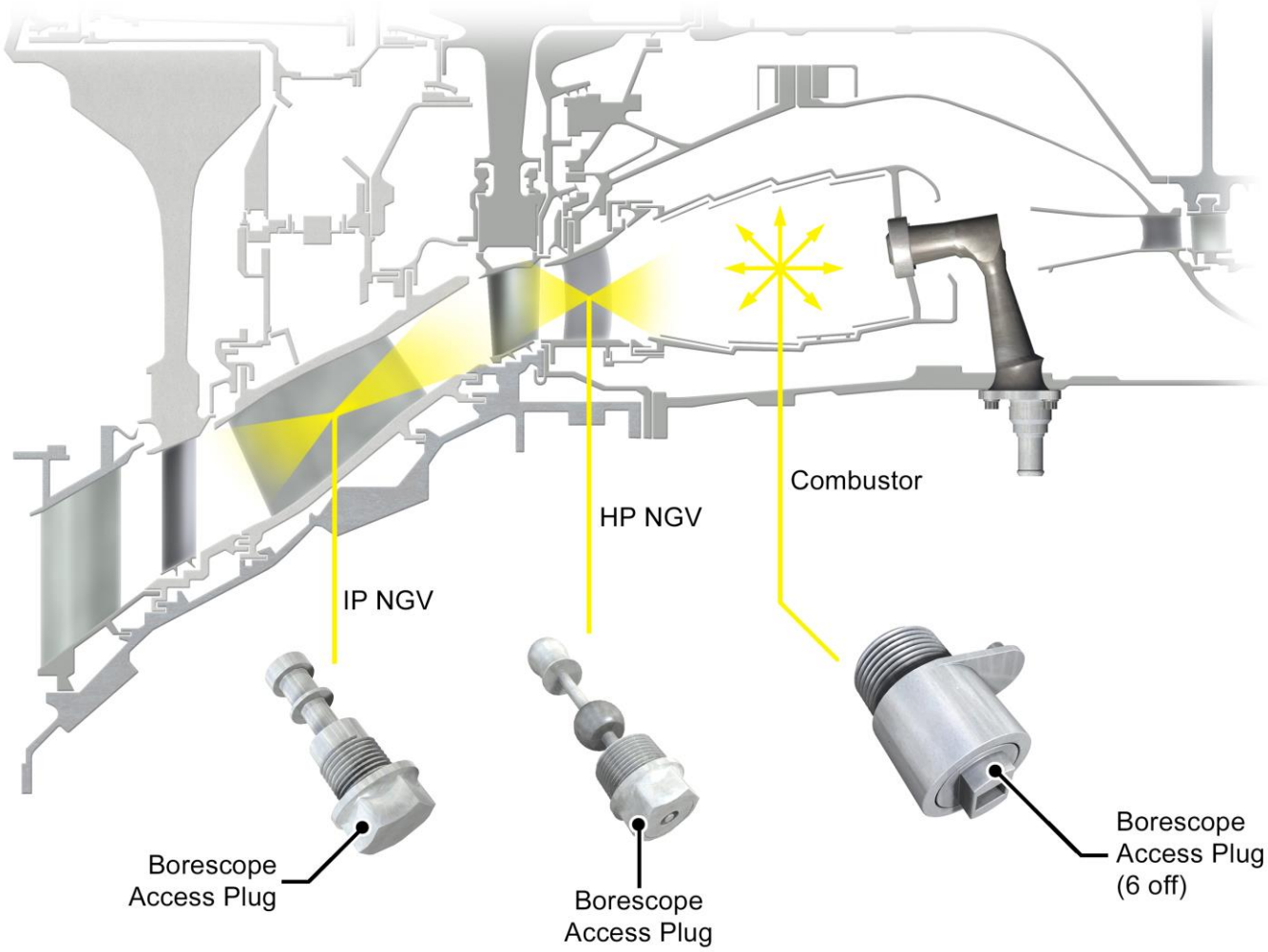

T1000 TEN_LBM_M04_064_01P

HP NGV BORESCOPE PLUG

© Rolls-Royce plc 2018. Use or disclosure is subject to the legend on the Notice to Holder page

Maintenance Practices

Borescope Plug Removal and Installation

IP NGV Blanking Plug

The following is a brief description of these tasks. Refer to the AMM for the full description and the relevant OMSD for the correct use of any specialised tooling.

The leading edge of the IP Turbine can be inspected through the IP Turbine borescope access hole. The trailing edge of the IP Turbine blade can be inspected through the LP1 Turbine borescope access hole.

The damage accept and reject standards can be found in the AMM.

Identification of the types of damage can be found in the standard practices section (B787-A-R70-01-02-00A-030A-A)

The warnings and cautions relating to the temperature of the engine are the same as the IP Compressor.

NOTE: Removal of the IP Turbine Borescope plug will allow inspection of the IP Turbine leading edge and the HP Turbine trailing edge.

Removal (AMM Task B787-A-R72-00-00-32D-520A-A)

1. Ensure the Thrust Reverser has been deactivated for ground maintenance.
2. Open the Fan Cowls.
3. Open the right side Thrust Reverser C-duct.
4. Remove the IP Turbine Borescope Plug.

Installation (AMM Task B787-00-00-32D-720A-A)

1. Clean the mating faces of the IP Turbine Borescope Plug and the HP/IP Turbine Case (AMM TASK B787-A-R70-20-01-00A-258A-A).
2. Use a brush to apply a thin layer of anti-seize compound to the location surface of the plug end and the mating faces of the blanking plug and the HP/IP Turbine Case.

CAUTION

MAKE SURE YOU ONLY APPLY A THIN LAYER OF THE ANTISEIZE COMPOUND. IF YOU APPLY TOO MUCH ANTI-SIEZE COMPOUND IT CAN GO INTO THE ENGINE AND CAN CAUSE DAMAGE.

3. Install the blanking plug and torque load the blanking plug to the figure obtained from the AMM.

© Rolls-Royce plc 2018. Use or disclosure is subject to the legend on the Notice to Holder page

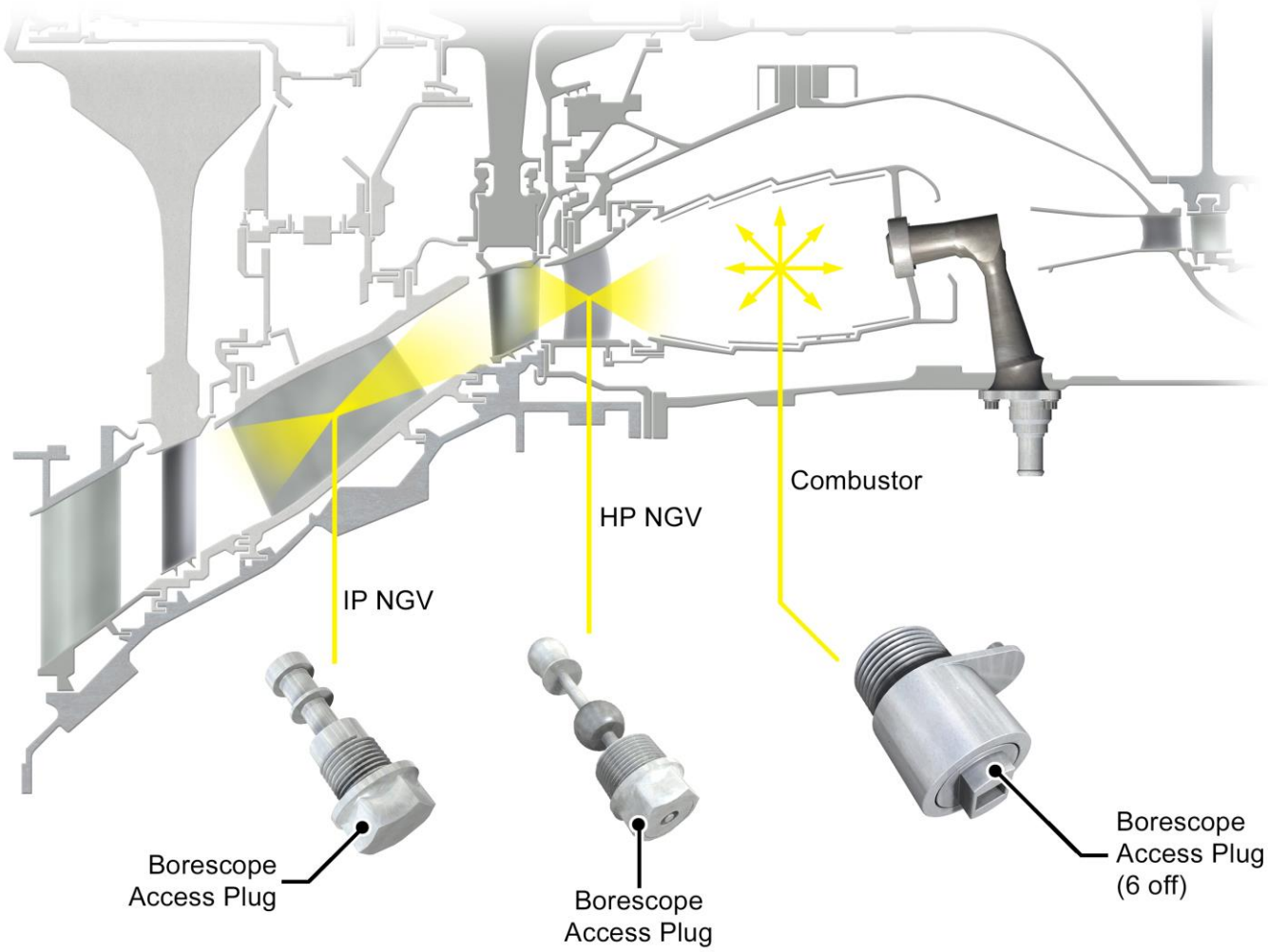

T1000 TEN_LBM_M04_064_01P

IP NGV BORESCOPE PLUGS

© Rolls-Royce plc 2018. Use or disclosure is subject to the legend on the Notice to Holder page

Maintenance Practices

Borescope Plug Removal and Installation

LP Turbine Blanking Plugs

The following is a brief description of these tasks. Refer to the AMM for the full description and the relevant OMSD for the correct use of any specialised tooling.

Removal of the LP1 blanking plug will allow inspection of the LP Turbine Stage 1 leading edge and the IP Turbine trailing edge. The remaining LP Turbine blanking plugs will allow inspection of the remaining stages, each plug inspecting the leading edge of the stage to which it is numbered and the trailing edge of the previous stage.

The damage accept and reject standards can be found in the AMM.

Identification of the types of damage can be found in the standard practices section (B787-A-R70-01-02-00A-030A-A)

The warnings and cautions relating to the temperature of the engine are the same as the IP Compressor.

Removal (AMM Task B787-A-R72-00-00-32D-520A-A)

1 Ensure the Thrust Reverser has been deactivated for ground maintenance.

2 Open the Fan Cowl Doors.

3 Open the right side Thrust Reverser C-duct.

4 Remove the borescope plug.

Installation (AMM Task B787-00-00-32D-720A-A)

1 Clean the mating faces of the blanking plugs, the HP/IP Turbine Case and the LP Turbine Case.

2 Use a brush to apply a thin layer of anti-seize compound to mating faces of blanking plugs and the LP Turbine Case. Apply the anti-seize compound to the threads of the blanking plugs also.

CAUTION

DO NOT APPLY TOO MUCH ANTI SIEZE COMPOUND TO THE PLUG. IF YOU APPLY TOO MUCH ANTI-SIEZE COMPOUND IT CAN GO INTO THE ENGINE AND CAN CAUSE DAMAGE.

3 Install the blanking plug.

4 Torque load the blanking plugs to the figure obtained from the AMM.

© Rolls-Royce plc 2018. Use or disclosure is subject to the legend on the Notice to Holder page

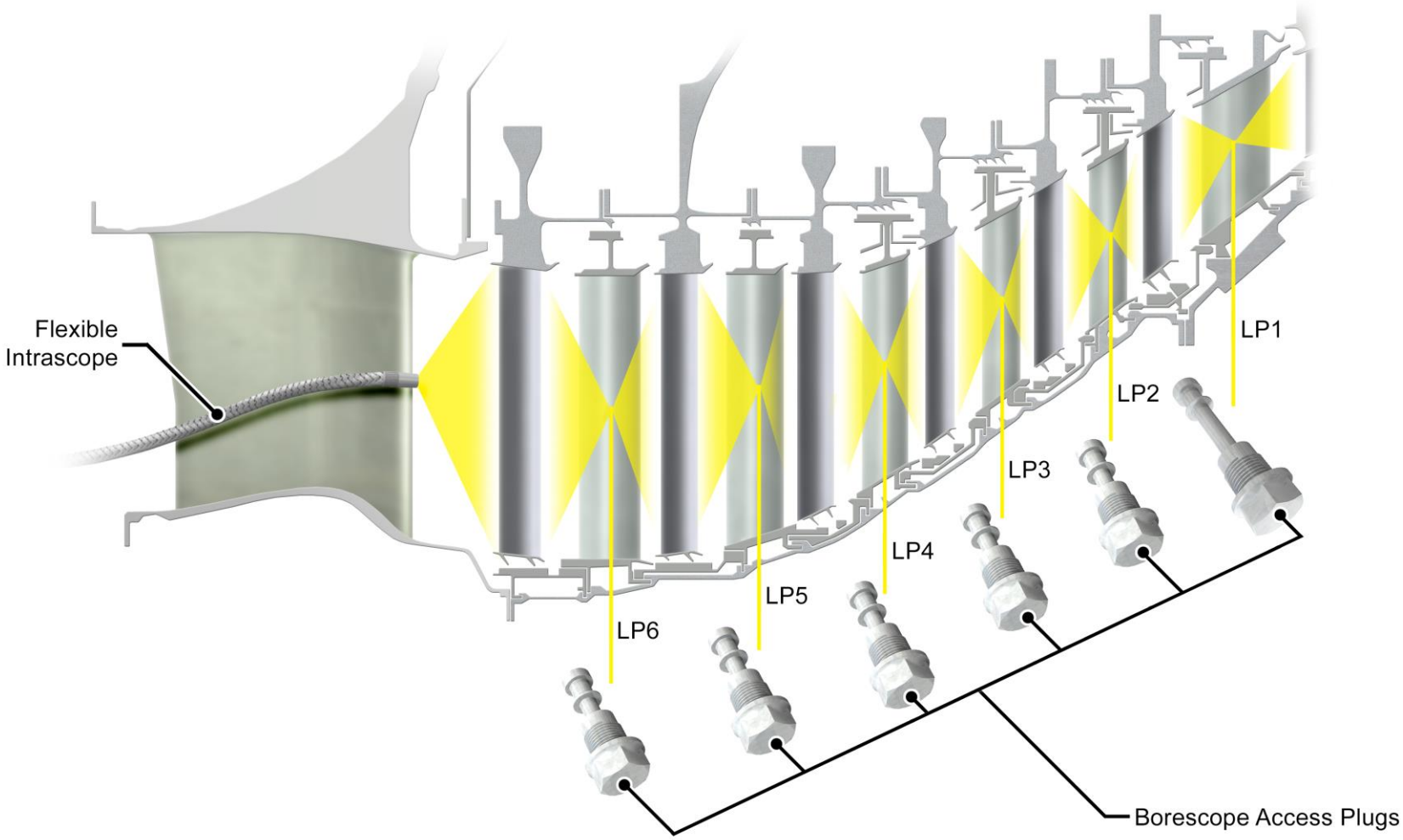

T1000 TEN_LBM_M04_065_01P

LP TURBINE BORESCOPE PLUGS

© Rolls-Royce plc 2018. Use or disclosure is subject to the legend on the Notice to Holder page

Maintenance Practices

Turning the LP, IP and HP Systems

The following is a brief description of these tasks. Refer to the AMM for the full description and the relevant OMSD for the correct use of any specialised tooling.

Turn the LP System AMM Task B787-A-R72-00-00-26A-950A-A

WARNING:

BE CAREFUL WHEN YOU DO WORK ON THE ENGINE PARTS AFTER THE ENGINE IS STOPPED. THE ENGINE PARTS CAN STAY HOT FOR ALMOST ONE HOUR. DO NOT TOUCH HOT PARTS WITHOUT APPLICABLE GLOVES. HOT PARTS CAN CAUSE INJURIES TO PERSONNEL.

WARNING:

MAKE SURE YOU ATTACH THE REAR COVER CORRECTLY TO MAKE SURE THE LP COMPRESSOR WILL NOT TURN ACCIDENTALLY. IF THE LP COMPRESSOR TURNS ACCIDENTALLY, IT CAN CAUSE INJURY TO PERSONS.

1. Ensure the Thrust Reverser has been deactivated for ground maintenance.
2. Install the protective mat into the engine inlet cowl ensuring the warning flags are in view.
3. Install the engine exhaust and engine fan plugs in position. These will help to prevent the LP system from windmilling.

WARNING:

PUT ON GLOVES FOR PROTECTION BEFORE YOU TOUCH THE SHARP EDGES. THE SHARP EDGES CAN CUT YOU.

4. Enter the Engine Inlet Cowl and turn the LP Compressor clockwise as viewed from the front of the engine.

Note: The LP System does not have any Carbon Seals installed, as such if it is required to do so, the LP System can be turned counter-clockwise, as viewed from the front of the engine.

5. When the task has been completed remove the protective mat from the inlet cowl and the engine exhaust and fan exhaust plugs.
6. Visually inspect the work area and to ensure there are no loose tools or equipment that may be ingested during engine start.
7. Re-activate the Thrust Reverser for flight.

© Rolls-Royce plc 2018. Use or disclosure is subject to the legend on the Notice to Holder page

TURNING THE LP SYSTEM

© Rolls-Royce plc 2018. Use or disclosure is subject to the legend on the Notice to Holder page

Maintenance Practices

Turning the LP, IP and HP Systems

The following is a brief description of these tasks. Refer to the AMM for the full description and the relevant OMSD for the correct use of any specialised tooling.

Turn the IP System AMM Task B787-A-R72-00-00-01A-950A-A

The warnings and cautions relating to the temperature of the engine and installation of covers and plugs are the same as for turning the LP System.

1. Ensure the Thrust Reverser has been deactivated for ground maintenance.
2. Open the Fan Cowl Doors (TASK B787-A-R71-11-04-00C-540A-A).
3. Install the engine inlet cover, engine exhaust and engine fan plugs in position. These will help to prevent the LP system from windmilling.
4. Ensure the red warning flags are in view.
5. Remove the yellow cover plate from the front of the Centrifugal Breather Housing.
6. Discard the cover plate seal ring.
7. Install the IP Turning Tool into the Centrifugal Breather Housing and engage the tri-lobe drive. The IP Turning Tool may require turning slightly until the tri-lobe drive engages correctly.
8. Attach the IP Turning Tool to the Centrifugal Breather.
9. Turn the IP Turning Tool with the correct size wrench to rotate the IP System through the external gearbox.

Note: The IP System does not have any Carbon Seals installed, as such if it is required to do so, the IP Turning Tool can be turned clockwise or counter-clockwise.

10. When the task is complete carefully remove the IP Turning Tool from the Centrifugal Breather Housing.
11. Install a new seal ring to the yellow cover plate. Refer to the Rolls-Royce standard practices Task B787-A-R70-02-01-00A-950A-A.
12. Lubricate the yellow cover plate attaching bolts. Refer to standard practices Task B787-A-R70-51-00-00A-950A-A.
13. Install the yellow cover plate onto the Centrifugal Breather Housing.
14. Torque load the yellow cover plate-attaching bolts to the figures obtained from the AMM.
15. Re-activate the Thrust Reverser.
16. Remove the engine inlet cover, exhaust and fan air plugs and ensure the area is clear of loose tools and equipment.

© Rolls-Royce plc 2018. Use or disclosure is subject to the legend on the Notice to Holder page

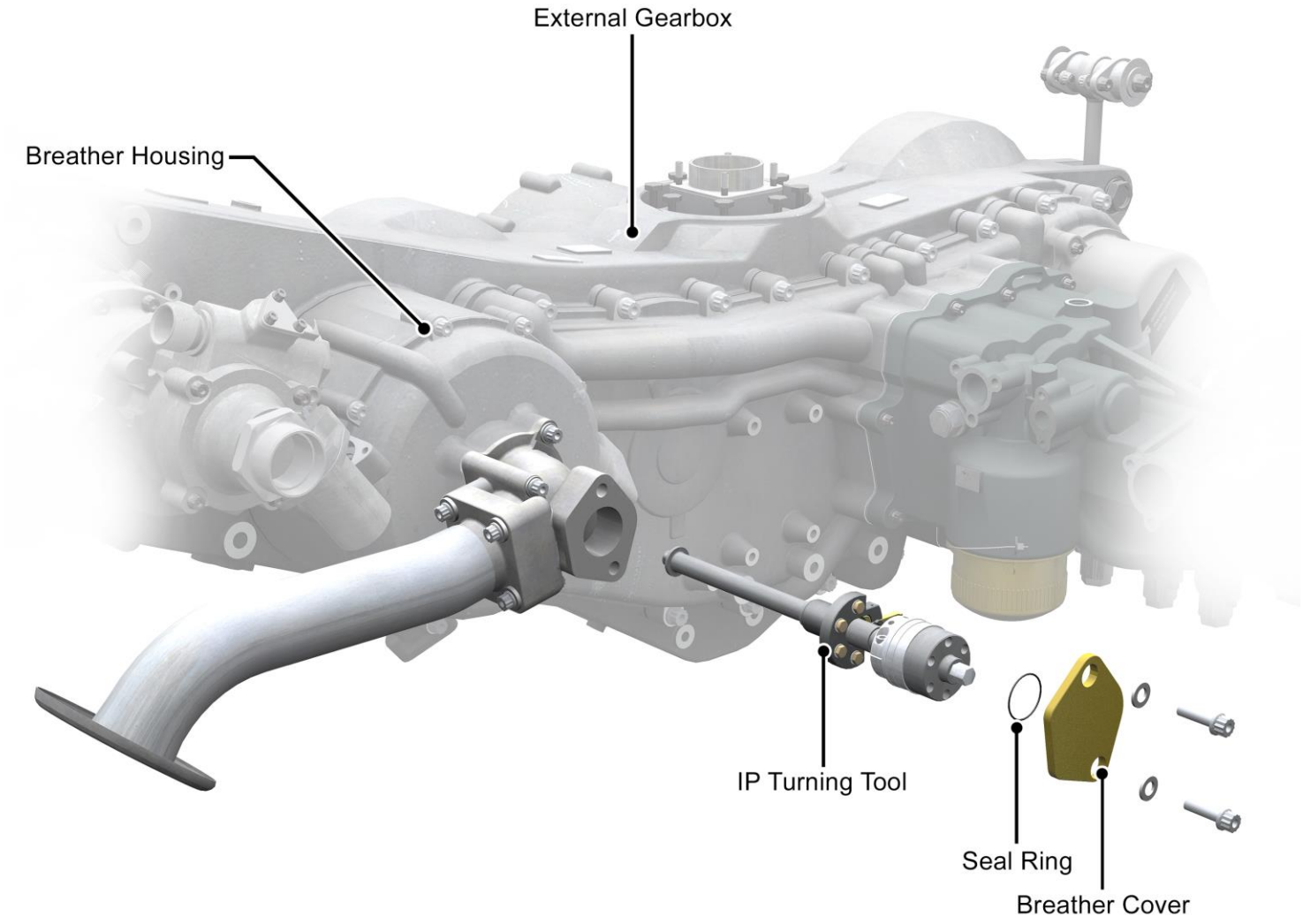

T1000 TEN_LBM_M04_067_01P

TURNING THE IP SYSTEM

© Rolls-Royce plc 2018. Use or disclosure is subject to the legend on the Notice to Holder page

Maintenance Practices

Turning the LP, IP and HP Systems

The following is a brief description of these tasks. Refer to the AMM for the full description and the relevant OMSD for the correct use of any specialised tooling.

Turn the HP System
AMM Task B787-A-R72-00-00-27C-950A-A

The warnings and cautions relating to the temperature of the engine and installation of covers and plugs are the same as for turning the LP System.

1. Ensure the Thrust Reverser has been deactivated for ground maintenance.
2. Open the right Fan Cowl Door (TASK B787-A-R71-11-04-00B-540A-A).
3. Open the Thrust Reverser for maintenance (TASK B787-A-R78-31-00-20B-540A-A).
4. Install the engine inlet cover, engine exhaust and engine fan plugs in position. These will help to prevent the LP system from windmilling.
5. Remove the lower right compressor fairing (TASK B787-A-R72-03-11-00A-520A-A).
6. Remove the nut from the shaft.

Note: The nut is attached by a lanyard.

7. Install the HP Turning Tool (RRT046961) onto the end of the shaft. Make sure that the splines on the shaft and turning tool engage correctly and attach to the adapter using the bolts provided.
8. Use the correct size wrench to turn the HP Turning Tool to rotate the HP System.

Note: The HP System does not have any Carbon Seals installed, as such if it is required to do so, the HP Turning Tool can be turned clockwise or counter-clockwise.

9. When the task is complete remove the HP Turning Tool from the shaft.
10. Install the nut onto the shaft. Make sure that anti-rotation plate flats on the nut retainer are correctly aligned with flats on the shaft.
11. Torque tighten the nut and safety with safety cable (recommended) or lockwire (alternative).
12. Install the lower right compressor fairing (TASK B787-A-R72-03-11-00A-720A-A).
13. Remove the engine inlet cover, exhaust and fan air plugs and ensure the area is clear of tools and equipment.
14. Close the Thrust Reverser (TASK B787-A-R78-31-00-20B-740A-A).
15. Close the right Fan Cowl Door (TASK B787-A-R71-11-04-00B-740A-A).
16. Re-activate the Thrust Reverser.

© Rolls-Royce plc 2018. Use or disclosure is subject to the legend on the Notice to Holder page

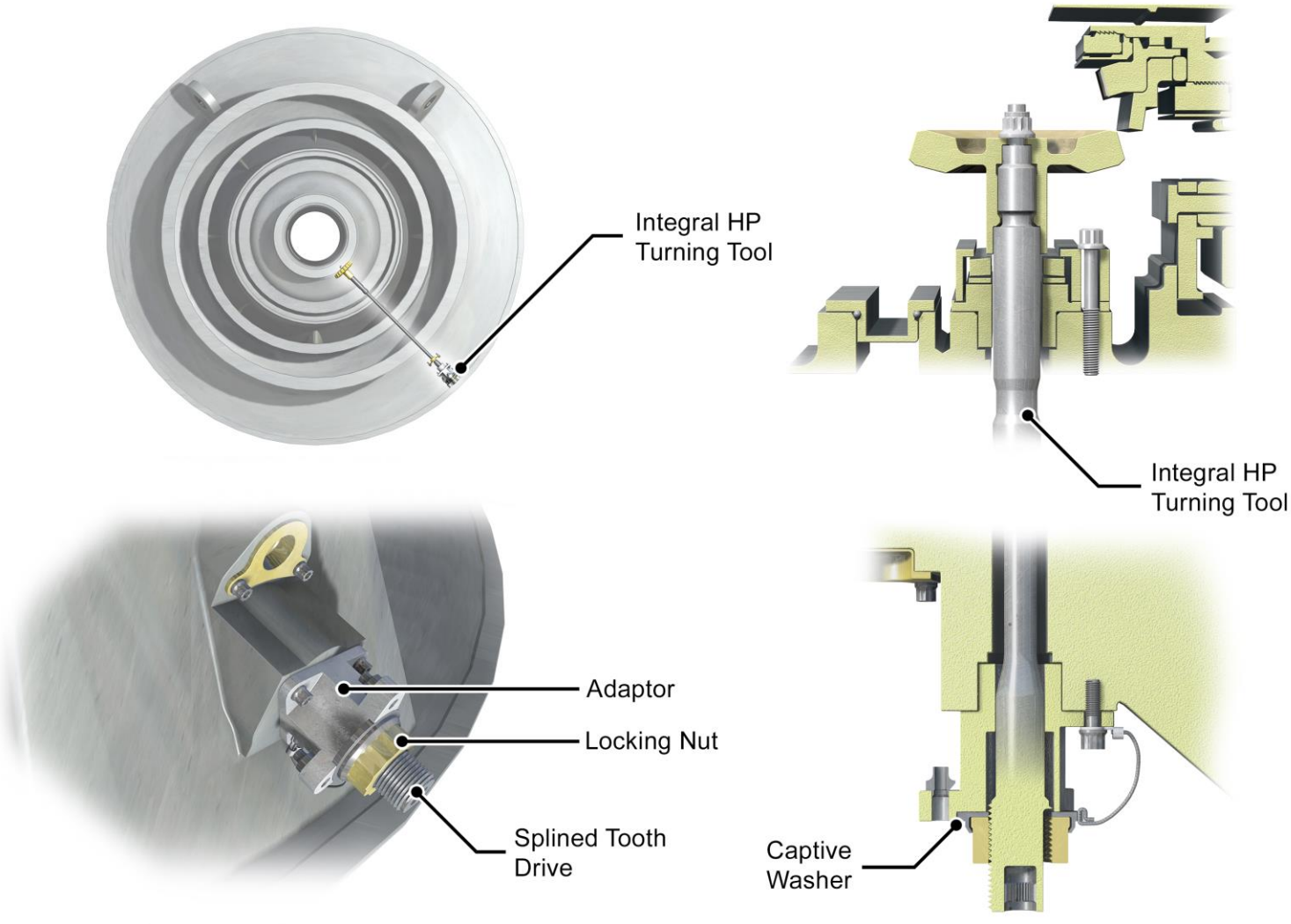

T1000 TEN_LBM_M04_068_01P

TURN THE HP SYSTEM

© Rolls-Royce plc 2018. Use or disclosure is subject to the legend on the Notice to Holder page

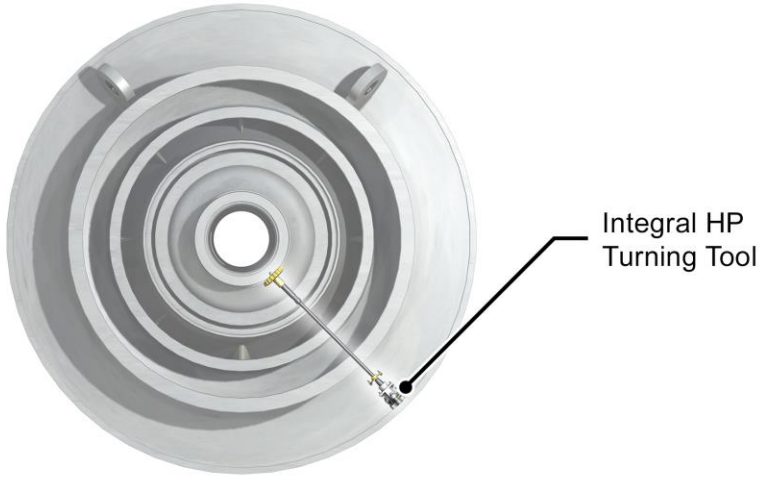

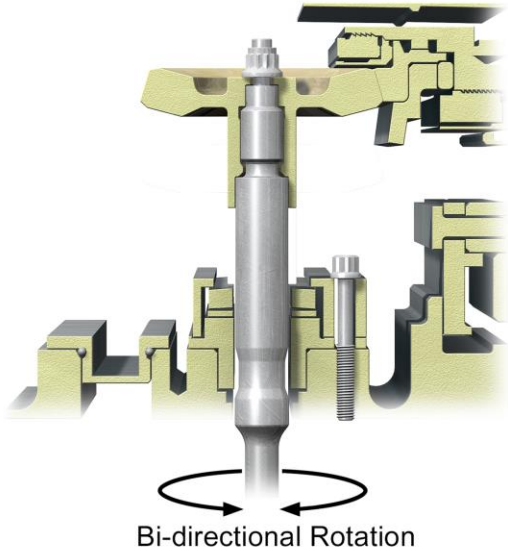

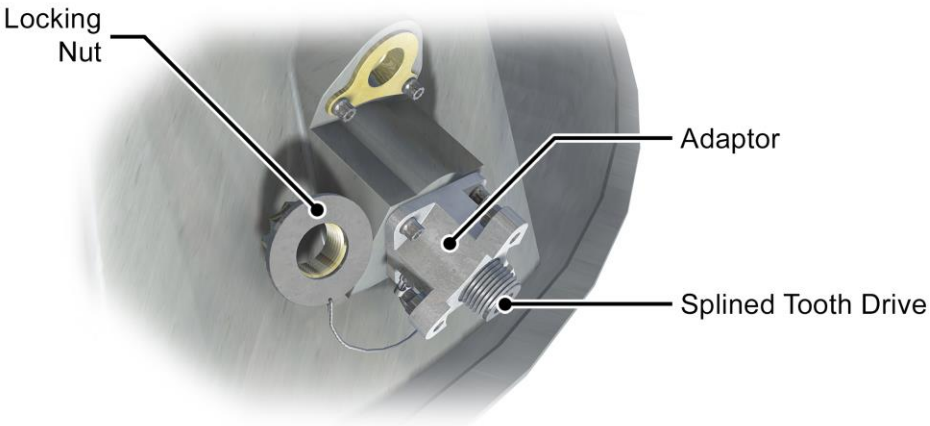

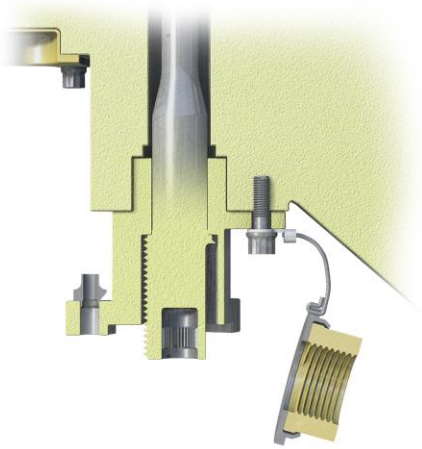

T1000 TEN_LBM_M04_069_01P

TURN THE HP SYSTEM

© Rolls-Royce plc 2018. Use or disclosure is subject to the legend on the Notice to Holder page

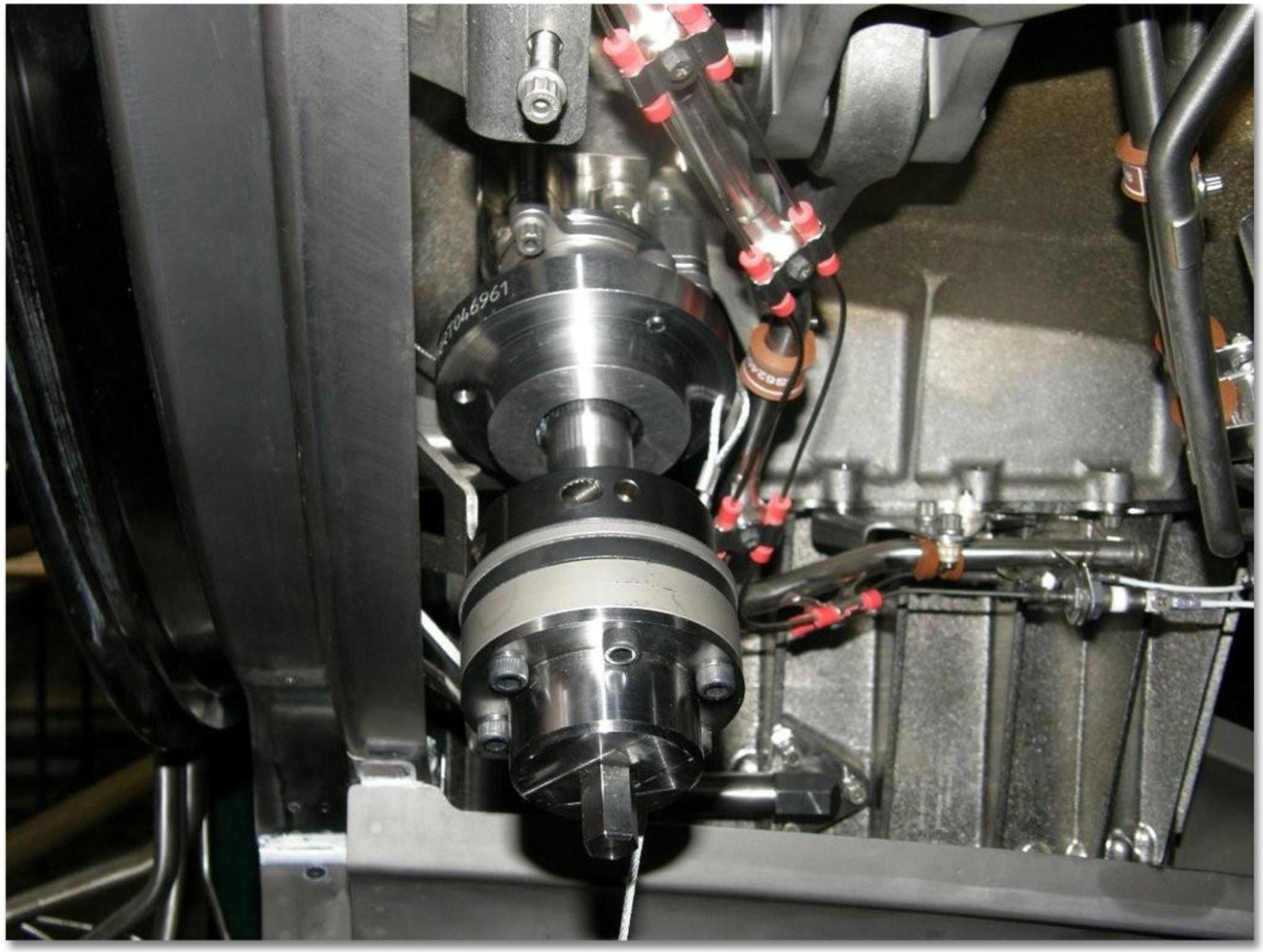

T1000 TEN_LBM_M04_070_01P

TURN THE HP SYSTEM

© Rolls-Royce plc 2018. Use or disclosure is subject to the legend on the Notice to Holder page

Maintenance Practices

Spinner and Fairing Removal and Installation

The following is a brief description of these tasks. Refer to the AMM for the full description and the relevant OMSD for the correct use of any specialised tooling.

WARNING:

BE CAREFUL WHEN YOU DO WORK ON THE ENGINE PARTS AFTER THE ENGINE IS STOPPED. THE ENGINE PARTS CAN STAY HOT FOR ALMOST ONE HOUR. DO NOT TOUCH HOT PARTS WITHOUT APPLICABLE GLOVES. HOT PARTS CAN CAUSE INJURIES TO PERSONNEL.

WARNING:

MAKE SURE YOU ATTACH THE REAR COVER CORRECTLY TO MAKE SURE THE LP COMPRESSOR WILL NOT TURN ACCIDENTALLY. IF THE LP COMPRESSOR TURNS ACCIDENTALLY, IT CAN CAUSE INJURY TO PERSONS.

Spinner Fairing Removal (TASK B787-A-R72-35-11-00A-520A-A)

1. Install the engine inlet cover, engine exhaust and engine fan plugs in position. These will help to prevent the LP system from windmilling.
2. Place a protective mat in the air intake cowl ensuring that the red warning flags are in view.
3. Turn the LP Compressor until the ends of the white spiral mark are at the 12 o'clock position to correctly position the TDC mark on the spinner.

WARNING:

PUT ON GLOVES FOR PROTECTION BEFORE YOU TOUCH THE SHARP EDGES. THE SHARP EDGES CAN CUT YOU.

4. Use the immobiliser (HU44525) to safety the LP Compressor in position to prevent it from turning.
5. Using a temporary marker (OMAT 262) or temporary pencil/crayon (OMAT 261) make a temporary straight-line mark across the annulus filler, spinner fairing and spinner. The line will be use to aid alignment of these parts during installation.
6. Remove the spinner fairing screws and washers from the spinner fairing and carefully remove the spinner fairing from the engine.

NOTE: The spinner fairing weighs 13lb (5.9KG).

Spinner Fairing Installation SUBTASK B787-A-R72-35-11-00A-720A-A)

1. Inspect the spinner fairing TASK B787-A-R72-35-11-00A-280A-A.
2. Lubricate the spinner fairing attachment screws (Standard Practices B787-A-R70-51-00-00A-950A-A).
3. Locate the spinner fairing in position using the temporary mark made during removal.

Note: The spinner fairing can only be installed in one position.

4. Install the attachment screws and torque load to the values given in the AMM.
5. Carry out the applicable test in the test reference table (TASK B787-A-R71-00-00-14A-950A-A)

© Rolls-Royce plc 2018. Use or disclosure is subject to the legend on the Notice to Holder page

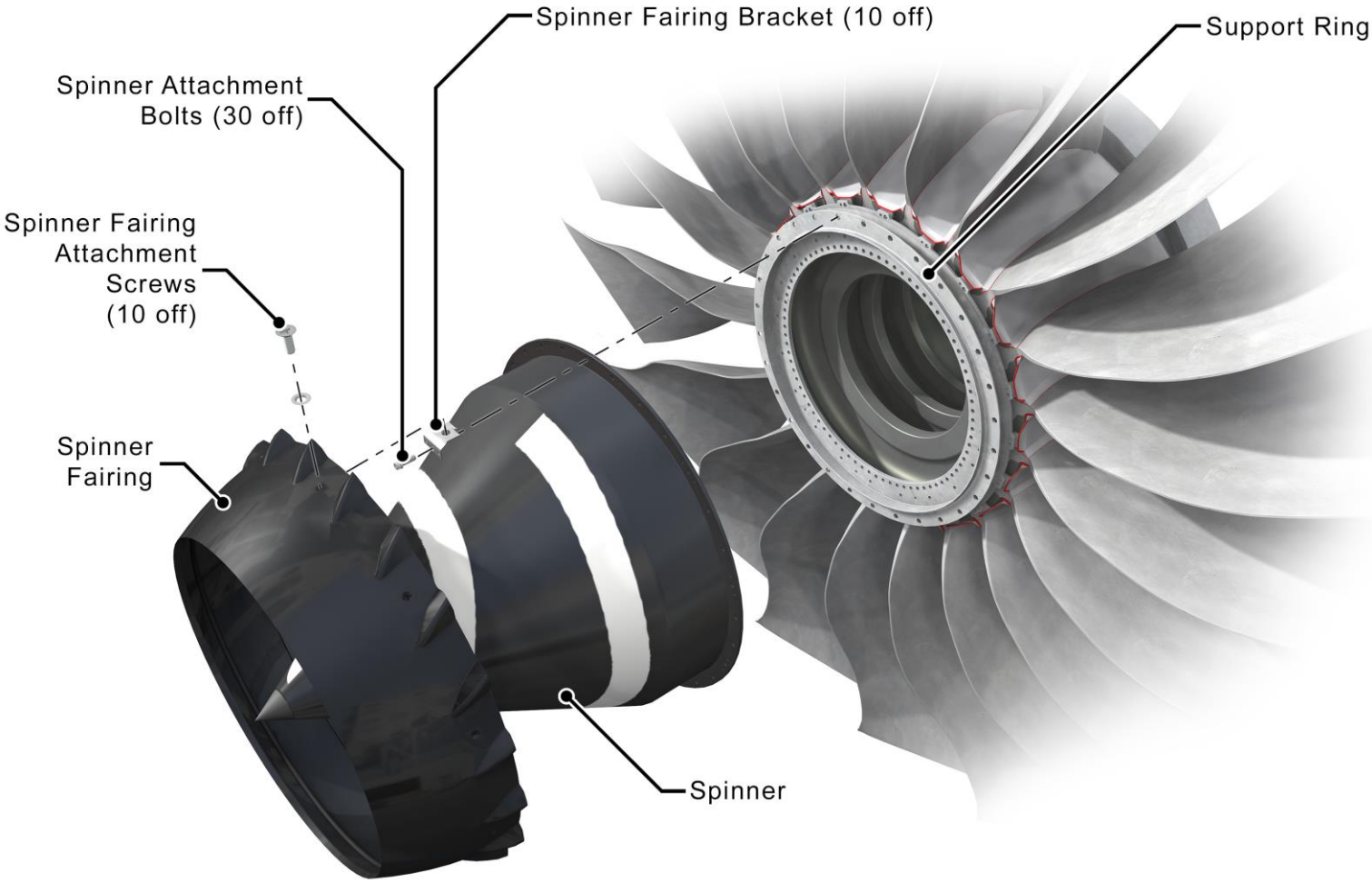

T1000 TEN_LBM_M04_071_01P

SPINNER AND FAIRING REMOVAL AND INSTALLATION

© Rolls-Royce plc 2018. Use or disclosure is subject to the legend on the Notice to Holder page

Maintenance Practices

Spinner and Fairing Removal and Installation (continued)

The following is a brief description of these tasks. Refer to the AMM for the full description and the relevant OMSD for the correct use of any specialised tooling.

Spinner Removal AMM TASK B787-A-R72-35-11-00A-520A-A

1. With the Spinner Fairing removed access can be gained to the spinner attachment bolts. Record the type and positions of the installed trim balance weight assemblies as you will need this information when you install the spinner to ensure the trim balance weights are replaced in the same position.
2. Remove the ten (10) bolts from the spinner fairing brackets and remove the brackets from the spinner flange. Keep the brackets and attachment bolts together to aid installation.
3. Remove the remaining twenty (20) spinner attachment bolts/trim balance weight assemblies from the spinner flange. It may aid removal to leave a loosened bolt at the 12 o'clock position to prevent the spinner from falling before removal.
4. With the aid of the lifting tool remove the spinner from the engine being careful not to drop the spinner onto the inlet cowl inner barrel.

Note: The spinner weighs 26lb (11.8kg).

5. Install the cover over the LP Compressor disc.
6. Ensure the work area is clean and clear of tools and equipment.

Spinner Installation AMM TASK B787-A-R72-35-11-00A-720A-A

1. Inspect the Spinner for damage (AMM TASK B787-A-R72-35-11-00A-280A-A)
2. Lubricate all 30-spinner attachment bolt threads with engine oil in accordance with RR standard practices (AMM B787-A-R70-51-00-00A-950A-A).
3. Clean the mating faces of the spinner, support ring and spinner fairing attachment brackets reference standard practices AMM TASK B787-A-R70-20-01-00A-258A-A.
4. Using the lifting tool, locate the spinner onto the support ring ensuring the temporary line on the spinner aligns with the temporary line on the annulus filler made during removal.

Note: The spinner can only be installed in one position.

5. Loosely install one of the twenty (20) spinner attachment/trim balance weight assemblies to the 12 o'clock position first. A bolt installed in this position will prevent the spinner from falling and causing damage.
6. Loosely install the remaining spinner attachment/trim balance weight assemblies ensuring the trim balance weight assemblies are installed in their original positions.
7. Loosely install the ten (10) spinner fairing brackets in position.
8. Tighten all thirty (30) spinner bolts and torque load to the values found in the AMM.
9. Carry out the applicable test in the test reference table (TASK B787-A-R71-00-00-14A-950A-A).

© Rolls-Royce plc 2018. Use or disclosure is subject to the legend on the Notice to Holder page

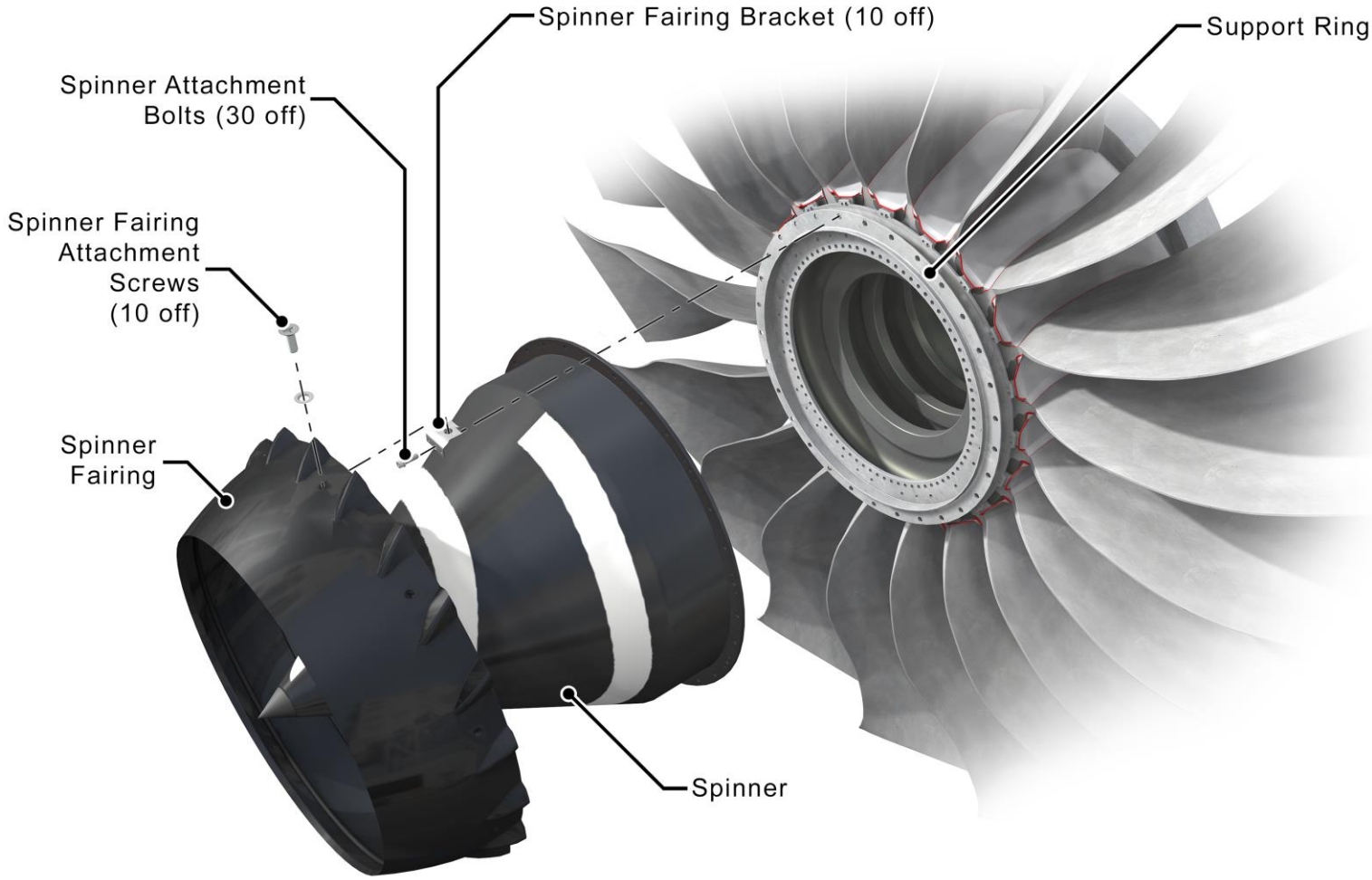

SPINNER AND FAIRING REMOVAL AND INSTALLATION

© Rolls-Royce plc 2018. Use or disclosure is subject to the legend on the Notice to Holder page

Maintenance Practices

Annulus Filler and Support Ring Removal and Installation.

The following is a brief description of these tasks. Refer to the AMM for the full description and the relevant OMSD for the correct use of any specialised tooling.

Annulus Filler Removal AMM TASK B787-A-R72-31-12-02A-520A-A

WARNING:

BE CAREFUL WHEN YOU DO WORK ON THE ENGINE PARTS AFTER THE ENGINE IS STOPPED. THE ENGINE PARTS CAN STAY HOT FOR ALMOST ONE HOUR. DO NOT TOUCH HOT PARTS WITHOUT APPLICABLE GLOVES. HOT PARTS CAN CAUSE INJURIES TO PERSONNEL.

WARNING:

MAKE SURE YOU ATTACH THE

REAR COVER CORRECTLY TO MAKE SURE THE LP COMPRESSOR WILL NOT TURN ACCIDENTALLY. IF THE LP COMPRESSOR TURNS ACCIDENTALLY, IT CAN CAUSE INJURY TO PERSONS.

Support Ring Removal

1. Install the engine inlet cover, engine exhaust and engine fan plugs in position. These will help to prevent the LP system from windmilling.
2. Place a protective mat in position in the air intake cowl ensuring that the red warning flags are in view.
3. Ensure the LP Compressor Immobiliser is in position to prevent movement of the LP Compressor during this task.
4. Record the position of any balance weights. This data will be required during installation of the support ring.
5. Remove the annulus filler attachment bolts.
6. Remove the support ring attachment bolts except for three (3) at equally spaced positions. These will require loosening but not removed.
7. Install the six (6) support ring removal capscrews (P/N 244689) into the extraction features.
8. Turn the capscrews in increments of half a turn, in a diagonal sequence until the support ring is released from the LP Compressor disc but prevented from falling by the three attachment bolts (item 6).
9. Hold the support ring, remove the final three (3) attachment bolts (item 6) and remove the support ring from the engine.

Annulus Filler Removal

1. Identify the position of annulus fillers to be removed and the corresponding position on the LP Compressor Disc with a number using a temporary marker (OMAT 262).
2. Ensure the annulus filler to be removed is at the 6 o’clock position.
3. Pull the annulus filler forward to disengage it from the compressor disc and lower into the widest space between the fan blades.
4. Remove the annulus filler from the engine turning the filler in the direction of its curve ensuring the sharp edges of the filler do not damage the fan blades.

© Rolls-Royce plc 2018. Use or disclosure is subject to the legend on the Notice to Holder page

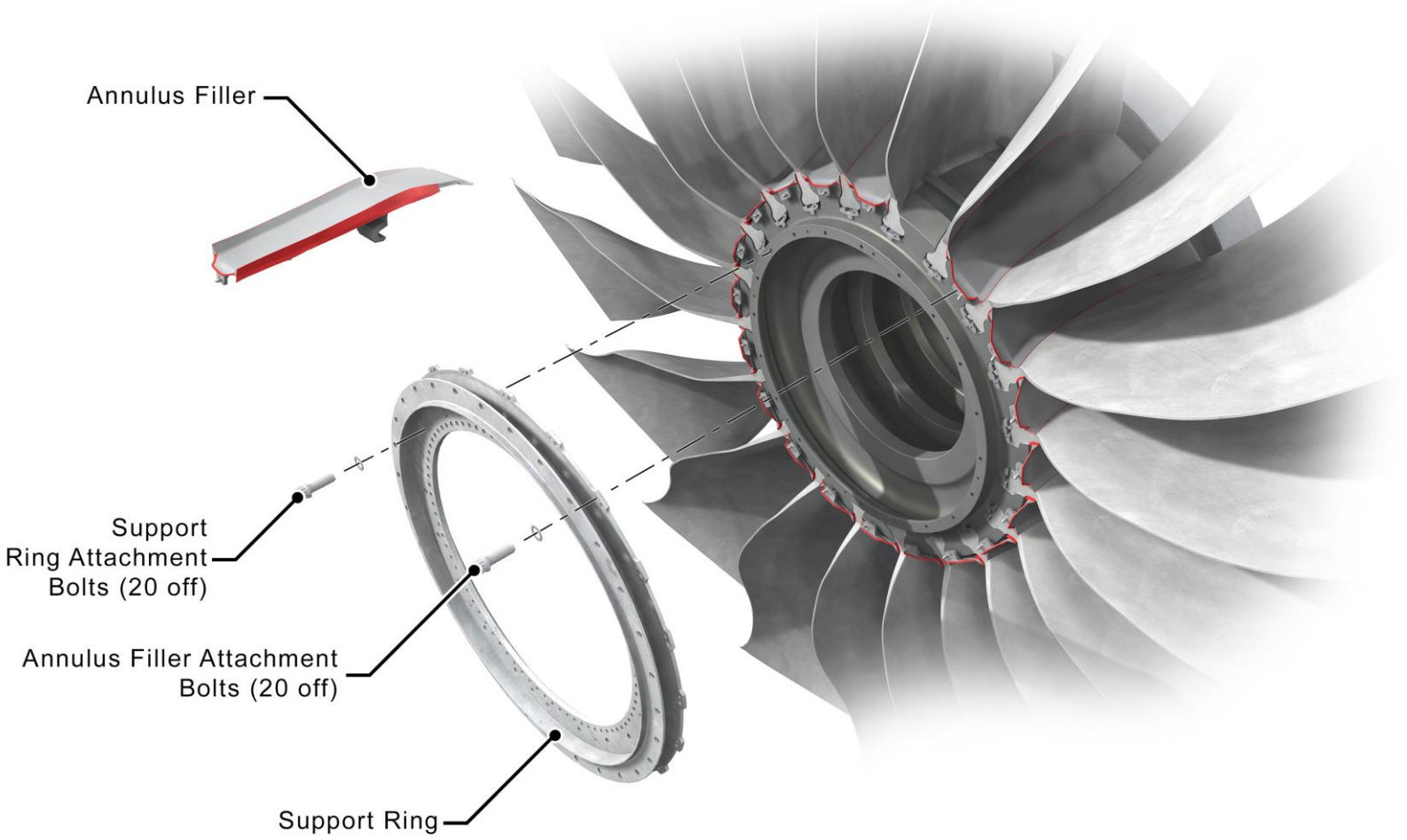

T1000 TEN_LBM_M04_072_01P

ANNULUS FILLER AND SUPPORT RING REMOVAL

© Rolls-Royce plc 2018. Use or disclosure is subject to the legend on the Notice to Holder page

Maintenance Practices

Annulus Filler and Support Ring Removal and Installation.

The following is a brief description of these tasks. Refer to the AMM for the full description and the relevant OMSD for the correct use of any specialised tooling.

Annulus Filler Installation (AMM Sub Task B787-A-R72-31-12-02A-720A-A)

1. To aid installation lightly lubricate the seal fins of the annulus filler with one part compressor washing fluid (OMAT 1070) mixed with four parts water.

Note: Engine oil may be used if compressor-washing fluid is not available.

2. Position the annulus filler to be installed at the 6 o'clock position and install the LP Compressor immobiliser.
3. Place the annulus filler between the fan blades at their widest point and lift upwards towards the LP Compressor Disc.
4. As the annulus filler is lifted upwards keep the hooks horizontal and rotate slightly in the direction of its curve.
5. Allow the annulus filler hooks to lightly touch the LP Compressor Disc and position it forwards of the disc.
6. Push the annulus filler rearwards to engage the hooks into the LP Compressor Disc.
7. Ensure the annulus filler is installed below the rear seal plate seal of the LP Compressor.
8. Ensure the annulus filler is installed correctly by taking a measurement from the front face of the annulus filler and the front face of the LP Compressor Disc.
9. If the measurement is greater than that found in the AMM remove the annulus filler and install again.
10. Lubricate all attachment bolts with engine oil (AMM Task B787-A-R70-51-00-00A-950A-A).
11. Position the support ring such that the yellow location mark on the support ring is aligned with the yellow mark on the LP Compressor Disc.

Note: The support ring has location dowels and as such can only be installed in one position.

12. Push the support ring onto the LP Compressor Disc to locate the dowels.
13. Loosely install an attachment bolt and washer at the 12 o'clock position to prevent the support ring from falling.
14. Install the remaining support ring attachment bolts and washers and torque tighten to the figures obtained from the AMM.
15. Install the bolts and washers to the annulus filler positions and torque tighten to the figures obtained in the AMM.
16. Ensure all protective mats, blanks; loose tools and equipment have been removed from the engine.

© Rolls-Royce plc 2018. Use or disclosure is subject to the legend on the Notice to Holder page

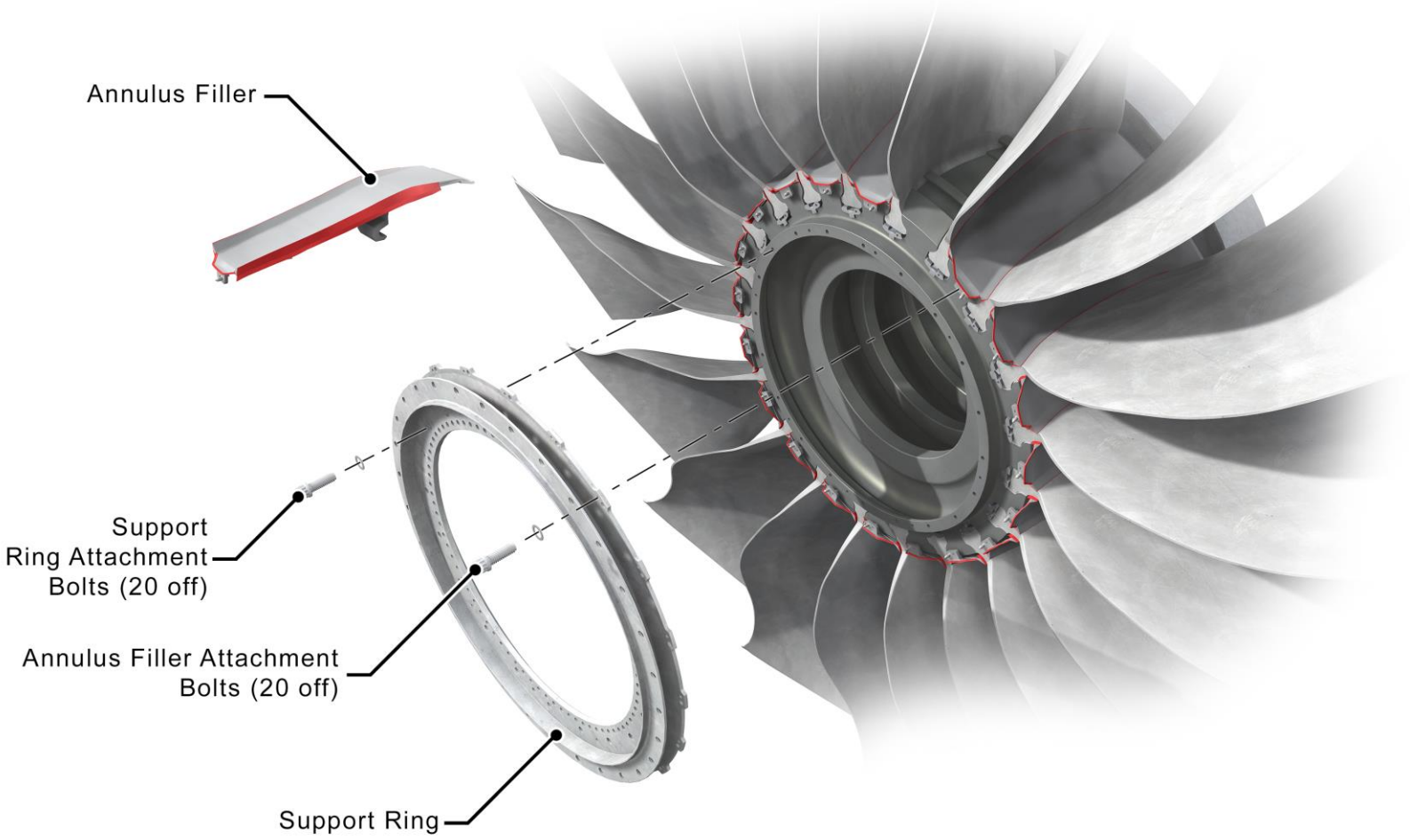

T1000 TEN_LBM_M04_072_01P

ANNULUS FILLER AND SUPPORT RING INSTALLATION

© Rolls-Royce plc 2018. Use or disclosure is subject to the legend on the Notice to Holder page

Maintenance Practices

Fan Blade Removal and Installation.

The following is a brief description of these tasks. Refer to the AMM for the full description and the relevant OMSD for the correct use of any specialised tooling.

AMM TASK B787-A-R72-31-11-00B-520A-A

WARNING: BE CAREFUL WHEN YOU MOVE THE COMPONENT. THE COMPONENT IS HEAVY. INJURIES TO PERSONS CAN OCCUR.

Fan Blade Removal (Single Blade)

1. Install the exhaust plug and fan air exhaust plug to prevent the LP Compressor from windmilling.

WARNING: MAKE SURE THAT YOU ATTACH THE REAR COVER CORRECTLY TO MAKE SURE THAT THE LP COMPRESSOR WILL NOT TURN ACCIDENTALLY. IF THE LP COMPRESSOR TURNS ACCIDENTALLY, IT CAN CAUSE INJURY TO PERSONS.

2. Place a protective mat in the inlet cowl.
3. Install the LP Compressor immobiliser (HU44525) to prevent movement of the LP Compressor.
4. Remove the intake spinner and fairing (AMM TASK B787-A-R72-35-11-00A-520A-A).
5. Remove the support ring.
6. Remove the immobiliser.
7. Align the yellow mark on the disc with number one blade.

Note: There are permanent marks on the LP Compressor Disc that identify the number one (1), two (2) and three (3) blade positions. The marks are in a counterclockwise direction when looking aft

8. Using a temporary marker (OMAT 262) write the position number on the LP Compressor Disc, the blade to be removed and the annulus fillers that require removal.
9. Remove the applicable annulus fillers (AMM TASK B787-A-R72-31-12-02A-520A-A).
10. Position the blade to be removed at the 6 o'clock position and install the immobiliser.
11. Screw in the adaptor to the slider plate and install the impact extractor onto the adaptor.
12. Using the impact extractor remove the slider plate.

Note: The slider plate is curved to match the LP Compressor Disc dovetail, allow the slider plate to follow this curvature.

13. Remove the adaptor and impact extractor from the slider plate.
14. Using gloves take a firm hold of the fan blade and lift radially until the shear key disengages from the key slot. Be careful the fan blade weighs 15.5Kg (34lb)
15. Move the blade forward approximately 25mm (1.0 inch) and then lower it back to the bottom of the dovetail slot.
16. Again take a firm hold of the fan blade, lift radially and remove from the LP Compressor Disc turning the blade as it is removed in the direction of the dovetail curvature.
17. Record the Radial Moment weight of the fan blade.

To remove the full set refer to the AMM TASK B787-A-R72-31-11-02A-520A-A.

© Rolls-Royce plc 2018. Use or disclosure is subject to the legend on the Notice to Holder page

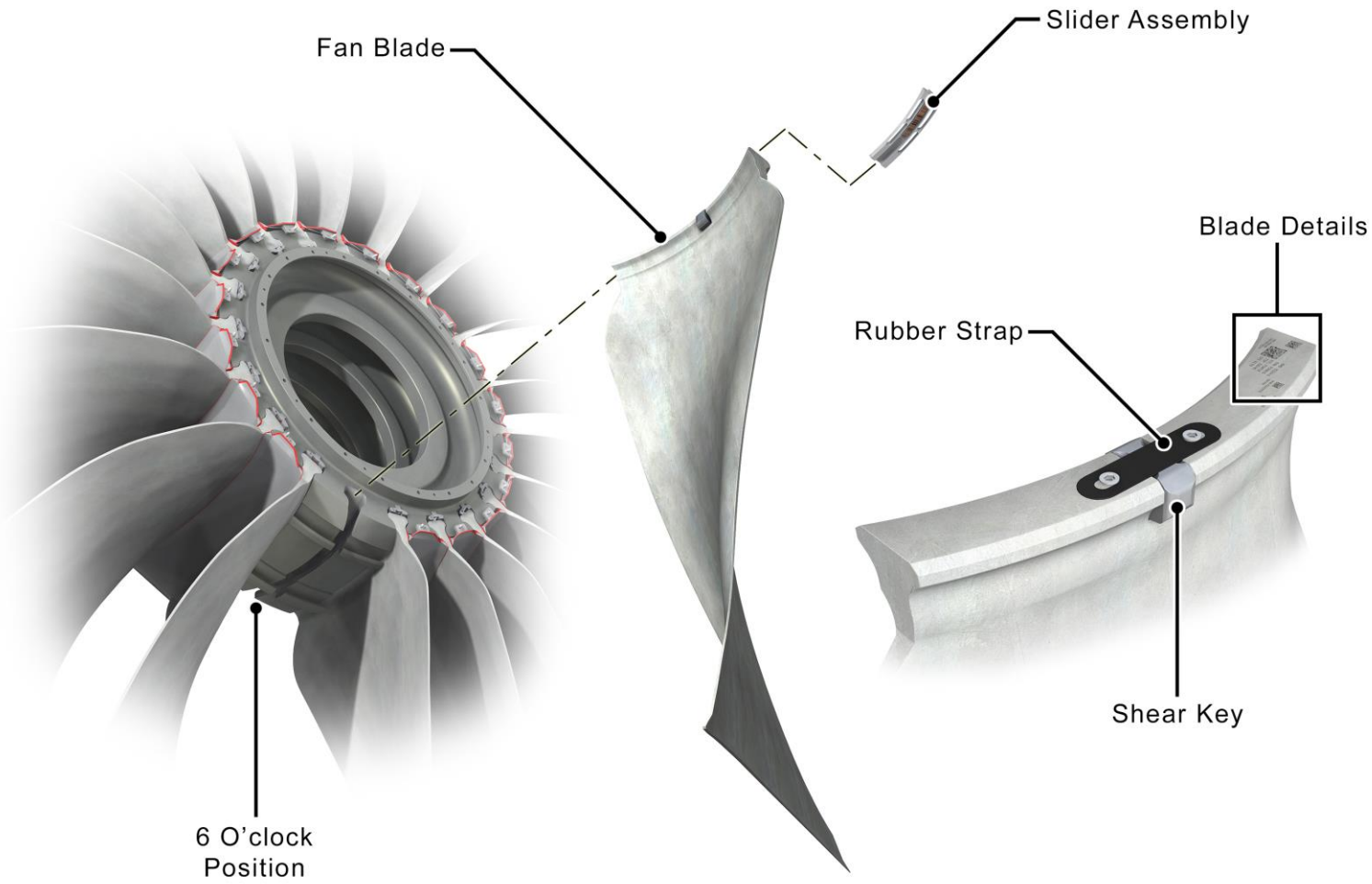

T1000 TEN_LBM_M04_073_01P

SINGLE FAN BLADE REMOVAL

© Rolls-Royce plc 2018. Use or disclosure is subject to the legend on the Notice to Holder page

Maintenance Practices

Fan Blade Removal and Installation.

The following is a brief description of these tasks. Refer to the AMM for the full description and the relevant OMSD for the correct use of any specialised tooling.

WARNING: BE CAREFUL WHEN YOU MOVE THE COMPONENT. THE COMPONENT IS HEAVY. INJURIES TO PERSONS CAN OCCUR.

Fan Blade Installation (Single Blade)

AMM TASK B787-A-R72-31-11-00B-720A-A

1. Clean and inspect the fanblade I.A.W the AMM.
2. If required, repair the fan blade dry film lubricant I.A.W FRSA 214, repair any dents, burrs or dry film lubricant to the shear key I.A.W FRSA 217 and repair shear key lubricant I.A.W FRSA 218.
3. If after inspection the fan blade is found to be un-serviceable a replacement blade can be fitted if their radial moment weight difference was between +/- 7 oz in. Note: a compensation weight will be required to be installed on the support ring if the Moment Weight Difference (MWD) was found to be between +/- 7 oz in and +/-70 oz in.
4. Ensure the applicable dovetail slot in the LP Compressor Disc is positioned at the 6 o'clock position.
5. Ensure the shear key is secured by the rubber strap
6. Using gloves, take a firm hold of the fan blade and lift into the LP Compressor Disc slot.
7. Keeping the blade towards the top of the dovetail, slowly move the fan blade towards the rear of the engine until the shear key can become engaged.

Note: Make sure the fan blade is turned in the direction of the dovetail curvature. DO NOT allow the flanks of the dovetail to make contact during the installation, this prevents damage to the Metco coating and prevents lubrication from being lost.

8. Lower the fan blade into position ensuring the shear key engages into the key slot.
9. Place the slider plate into position and push it fully aft.
10. Using a rubber mallet lightly hit the slider plate until the tang on the slider plate touches the LP Compressor Disc. This is an indication that the slider plate is fully installed.
11. Install the annulus fillers (AMM TASK B787-A-R72-31-12-02A-720A-A)
12. Install the support ring with compensation weights if required.
13. Install the spinner and spinner fairing (AMM TASK B787-A-R72-35-11-00A-720A-A).
14. Remove the protective mat from the engine inlet.
15. Remove the engine exhaust and fan air exhaust blanks from the engine.
16. Make sure the work area is clean and clear of tools and equipment.
17. Carry out the applicable tests for the LP Compressor Blade in the test Reference Table TASK B787-A-R71-00-00-14A-950A-A.

© Rolls-Royce plc 2018. Use or disclosure is subject to the legend on the Notice to Holder page

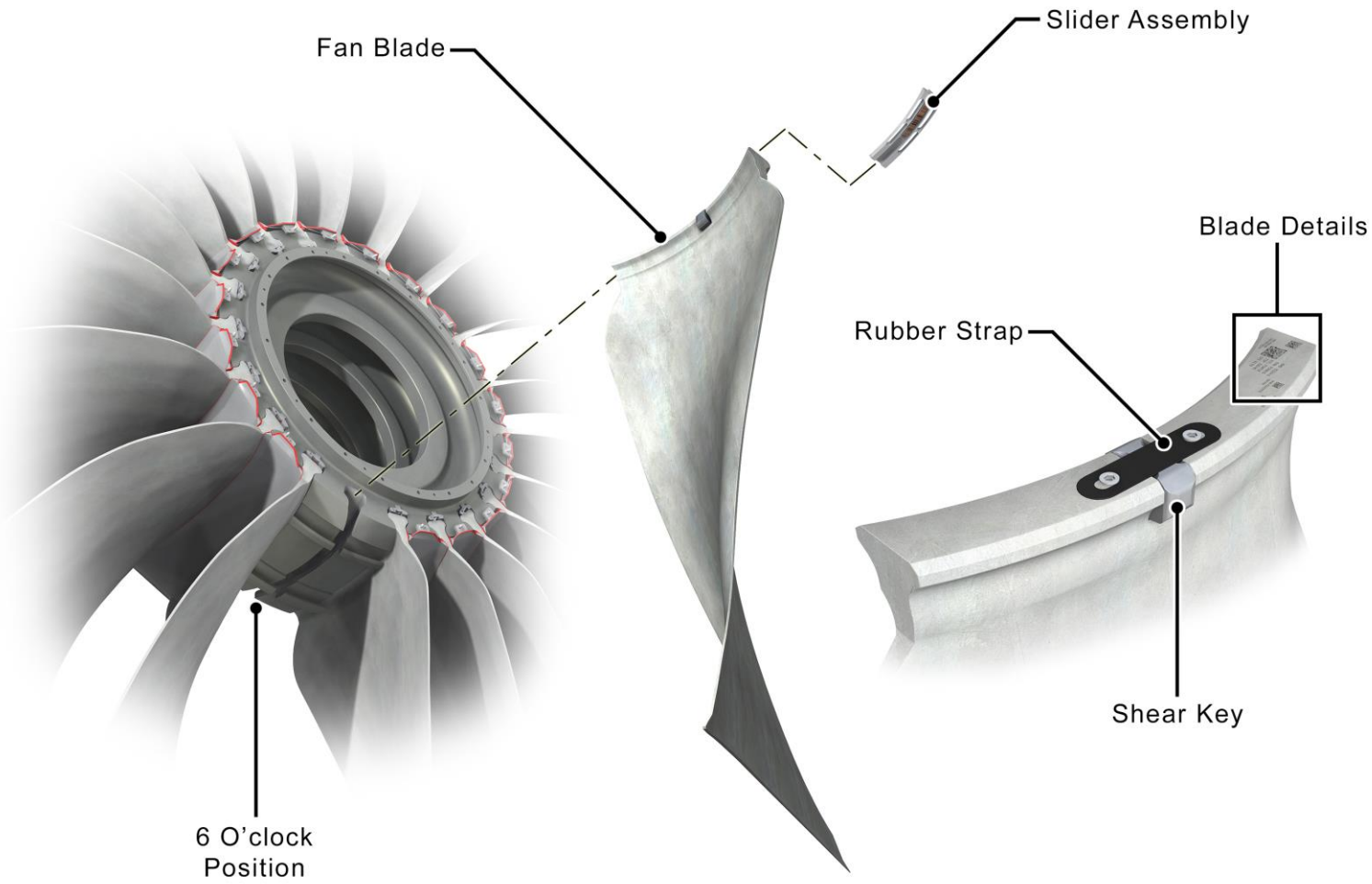

T1000 TEN_LBM_M04_073_01P

SINGLE FAN BLADE INSTALLATION

© Rolls-Royce plc 2018. Use or disclosure is subject to the legend on the Notice to Holder page

Maintenance Practices

LP Compressor Blade Inspection.

The following is a brief description of these tasks. Refer to the AMM for the full description and the relevant OMSD for the correct use of any specialised tooling.

AMM Task B787-A-R72-31-11-00D-280B-A

Inspection of the LP Compressor Blade is in two (2) parts. The first part inspection is above the annulus filler line. The second part is on and below the annulus filler line. Part one is carried out if the blade is installed and parts one and two are carried out if the blade has been removed.

1. Install the fan air exhaust and engine exhaust plug blanks to prevent the LP Compressor from rotating.
2. Install protective mats in the inlet cowl.
3. Safety the LP Compressor in position using the immobiliser (HU44525).
4. **Part one inspection**, above the annulus line. Inspect the fan blade for the following:
   a. Cracks – reject the blade
   b. Rippling in the airfoil surfaces

   Note: It is possible to see the panel line on the airfoil surface. This is usual and is not the same as ripples caused by blade damage.

   Also, ripples may be seen that are made during the manufacturing process, which if below the limits in the AMM, can be accepted.

   c. Heat discoloration or blueing on the airfoil surfaces and blade tips.

   Note: When a blade rubs on the compressor case blueing or heat discoloration may occur and appears as a blue oxide. The greater the damage the darker the blue oxide becomes.

   d. Arc-burns – reject the blade.

   Note: Arc-burns appear as small or circular or semi-circular areas that have been damaged by heat (dark blue oxide colour). The arc-burn area can include cracks pitting or possibly be melted.

   e. Scratches nicks and dents.
   f. Bends in the leading and trailing edges.
   g. Leading edge erosion.
   h. Nicks in the leading and trailing edges.
5. **Part two inspection**, on and below the annulus line. Inspect the fan blade for the following:
   a. Cracks on the airfoil surfaces and dovetail root – reject the blade.
   b. Rippling on the airfoil surfaces.
   c. Scoring or galling on the annulus filler line.
   d. Scratches, nicks and dents below the annulus line.
   e. Missing or damaged dry film lubricant.
   f. The shear key for dents, burrs, missing and damaged dry film lubricant.

   The accept and reject standards can be found in the AMM.

© Rolls-Royce plc 2018. Use or disclosure is subject to the legend on the Notice to Holder page

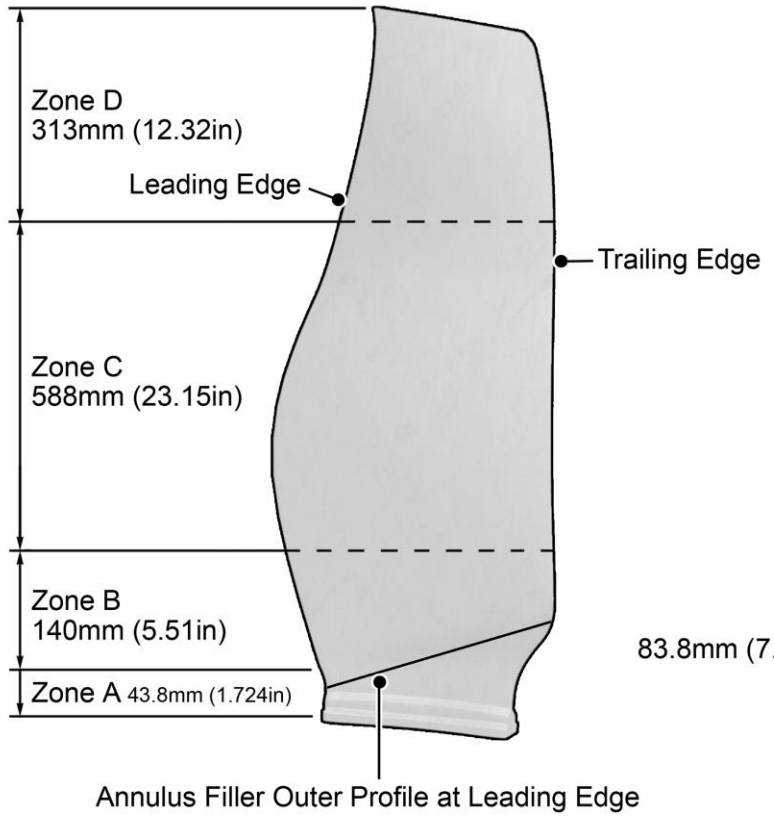

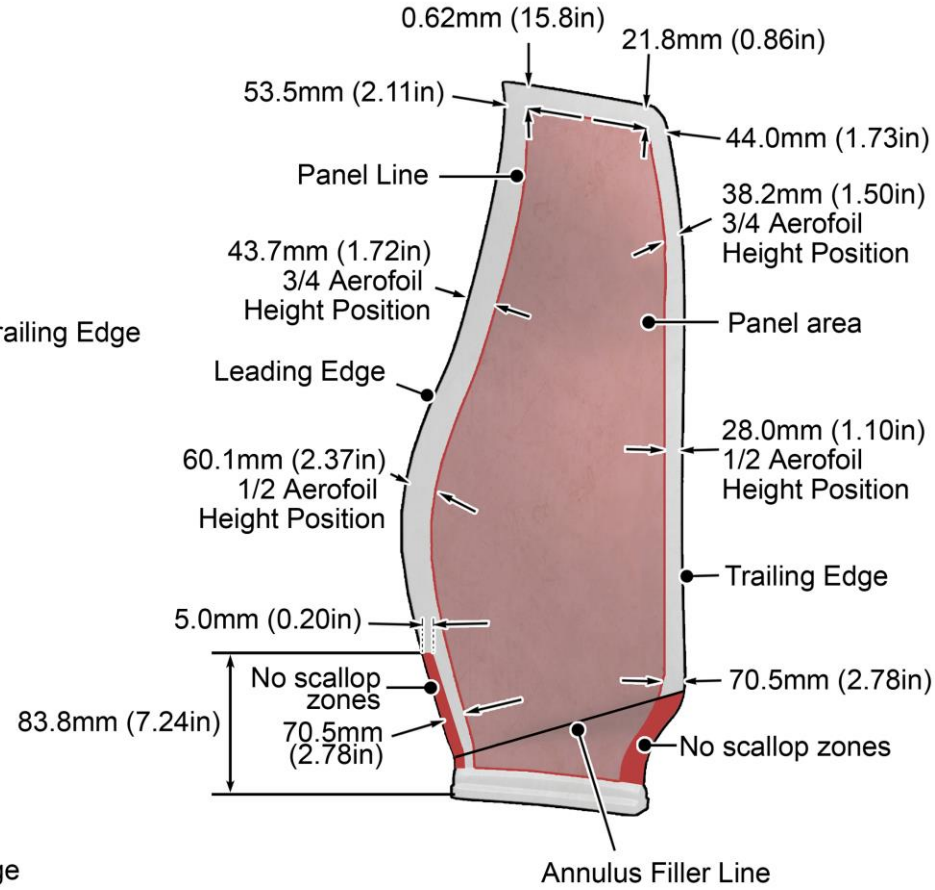

T1000 TEN_LBM_M04_074_01P

LP COMPRESSOR BLADE INSPECTION

© Rolls-Royce plc 2018. Use or disclosure is subject to the legend on the Notice to Holder page

Maintenance Practices

LP Compressor Blade Inspection.

LP Compressor Blade Bend Limits

The following is a brief description of these tasks. Refer to the AMM for the full description and the relevant OMSD for the correct use of any specialised tooling.

AMM Task B787-A-R72-31-11-00D-280B-A

The leading and trailing edges of the LP Compressor Blades should be inspected for bends. There are three main dimensions against which a bend is measured against:

A – Circumferential Deflection.

B – Axial Bend.

C – Radial Bend

The following is a brief description of these tasks. Refer to the AMM for the full description.

1. General
    a. If more than 3 blades are bent in the LP Compressor Assembly then reject all of the bent blades.
    b. If there is more than one bend in a blade, reject that blade.
    c. Reject the blade if a bend is not smooth or has kinks, tears, cracks or nicks.
    d. Reject the blade if there is untwist in the blade.
    e. Reject the blade if the bend extends into the panel area.
2. Bends where the Circumferential Dimension (A) is less more than 5.00mm (0.197in) can be accepted if:
    a. Dimension B is more than 8 times dimension A.
    b. Dimension C is more than 15 times dimension A.
    c. The bend does not extend into the panel area.
    d. Reject the blade if these limits are exceeded.

3 If the bend has a Circumferential Dimension (A) are more than 5.00mm (0.197in) but less than 12.50mm (0.492in) carry out the following:
    a. If the dimension is within the limits below replace the LP Compressor Blade before 125 flight hours or 25 flight cycles. Use the first limit to occur.
        i. Dimension B is more than 8 times dimension A.
        ii. Dimension C is more than 15 times dimension A.
        iii. The bend does not extend into the panel area.
    b Reject the blade if the above limits are exceeded.

4 If the bend has a circumferential dimension (A) of more than 12.50mm (0.492 in) then reject the blade.

© Rolls-Royce plc 2018. Use or disclosure is subject to the legend on the Notice to Holder page

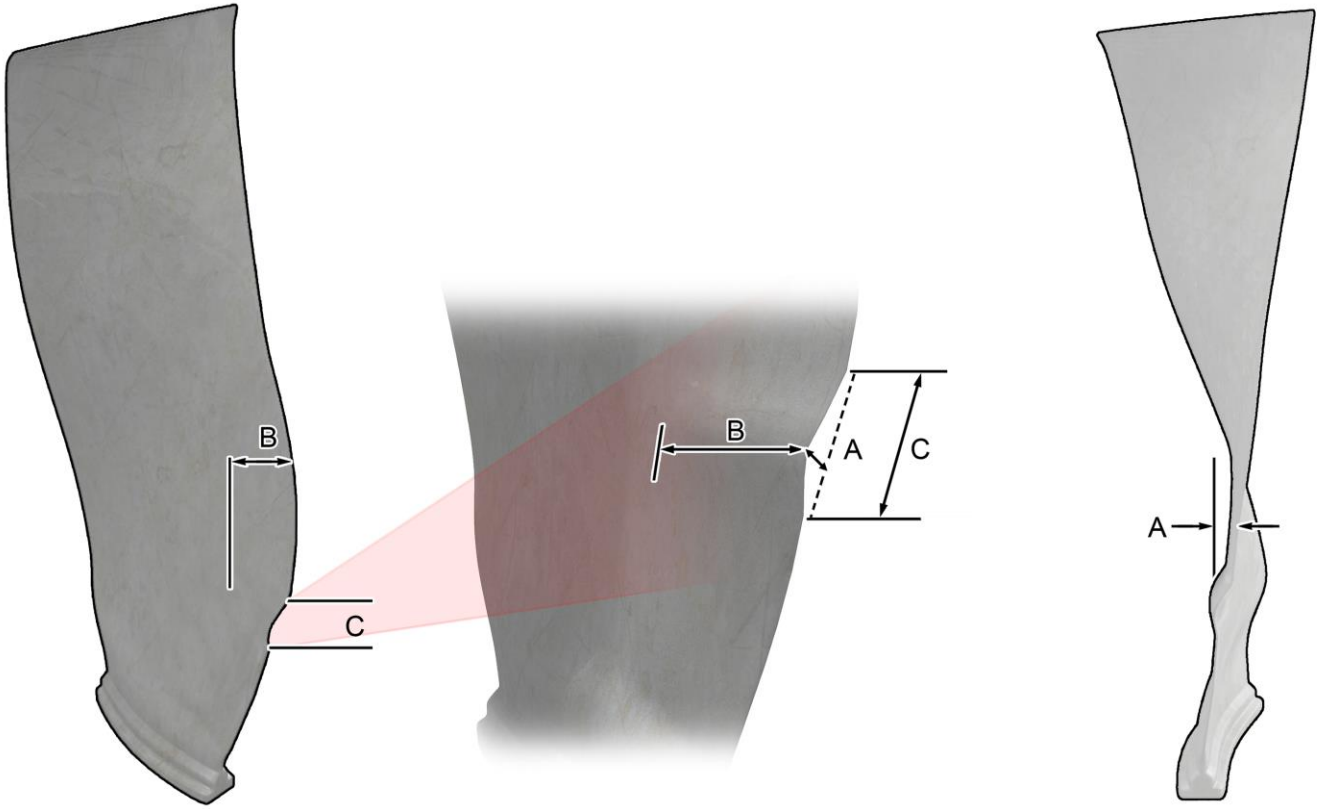

Bend Dimension B
Bend Dimension C

Circumferential
Dimension A

T1000 TEN_LBM_M04_075_01P

LP COMPRESSOR BLADE BEND LIMITS

© Rolls-Royce plc 2018. Use or disclosure is subject to the legend on the Notice to Holder page

Maintenance Practices

LP Compressor Blade Leading Edge Inspection.

The following is a brief description of these tasks. Refer to the AMM for the full description and the relevant OMSD for the correct use of any specialised tooling.

AMM Task B787-A-R72-31-11-04B-280B-A

Leading Edge Erosion

The Trent 1000 engine fan blade has an elliptical edge to increase the efficiency of the fan blade. As such erosion to the blade leading edge due to water and contamination in the air may have an affect on the fan blade efficiency.

The following is a brief description of the inspection criteria for the leading edge erosion.

1. Place Do-Not-Operate tags onto the applicable engine start and fuel control switches.
2. Place a protective mat into the inlet cowl and install the engine exhaust plug and fan air exhaust plug, ensuring that the red warning flags are visible.
3. Referring to the operating instructions, unpack and assemble Test Set UT1930.
4. Carry out an initial check of the equipment by performing a confidence check, refer to operating instructions.
5. Using a temporary marker, write the position number onto each of the LP Compressor Blades.
6. Using the laser tool supplied with the test set, measure the leading edge profile of each of the LP Compressor Blades at three positions, Tip, Middle and Root. Make sure that you do not hold the laser tool when you measure each profile.
7. Install an immobiliser (HU44525) to prevent movement of the LP Compressor Rotor.
8. On completion of the inspection review the results on the summary screen.
9. Power down and disassemble the test set as per the operating instructions.

© Rolls-Royce plc 2018. Use or disclosure is subject to the legend on the Notice to Holder page

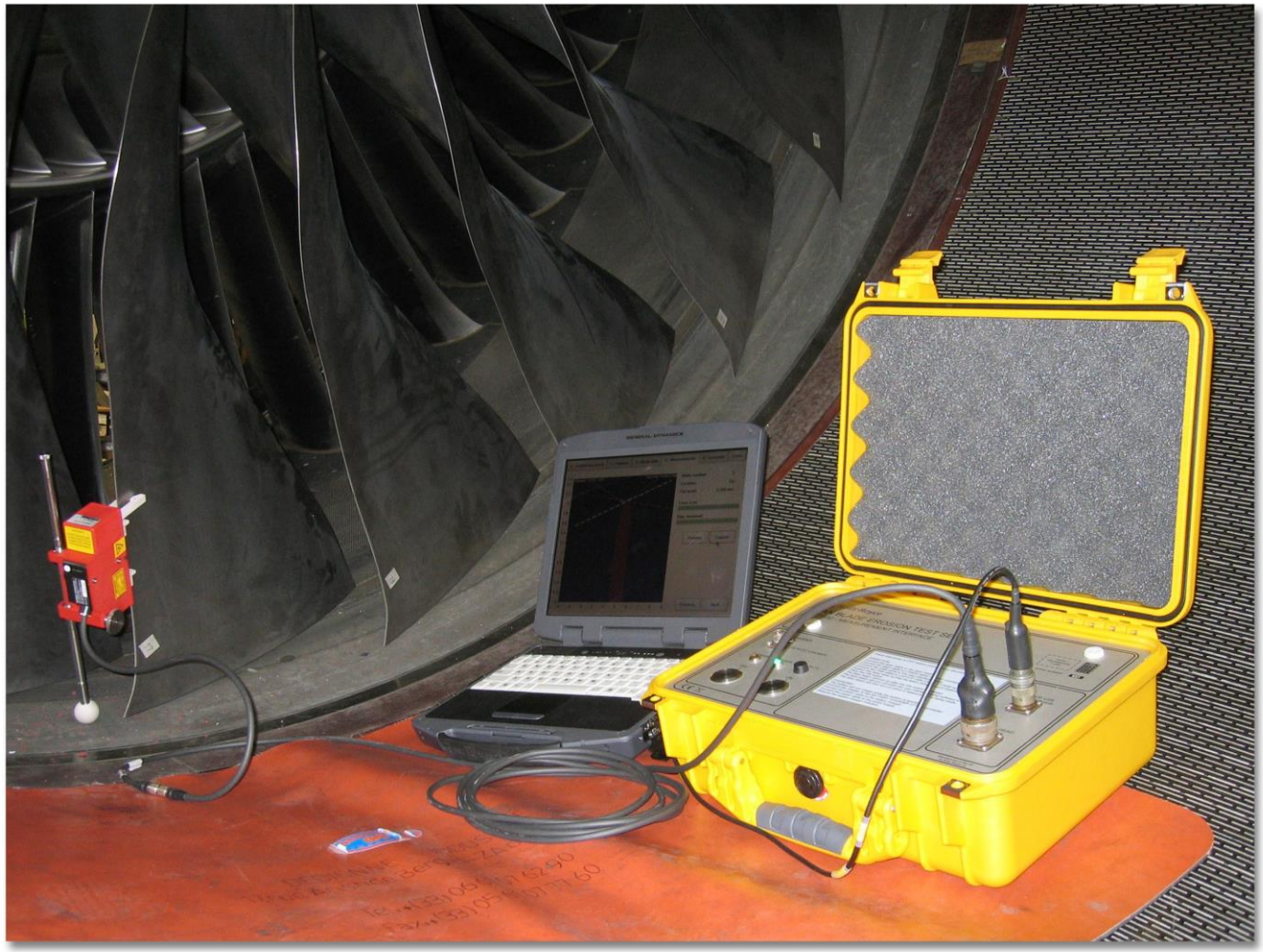

T1000 TEN_LBM_M04_076_01P

LP COMPRESSOR BLADE LEADING EDGE EROSION

© Rolls-Royce plc 2018. Use or disclosure is subject to the legend on the Notice to Holder page

Maintenance Practices

Fan Trim Balance.

The following is a brief description of these tasks. Refer to the AMM for the full description and the relevant OMSD for the correct use of any specialised tooling.

AMM Task DMC-B787-A-R71-00-00-42A-340A-A

There may come a point during the engines life when the LP compressor will require trim balancing. This happens due to the natural wear of the fan, after work has been carried out on the fan blades or after ingestion of foreign material.

At the time of publishing these training notes the fan trim balance procedure was not available. As such it is considered more prudent to discuss the information that was known at that time.

To enable the fan to be balanced during engine operation access to the fan trim balance weights is required. The trim balance weights can be found on the spinner location flange after removal of the spinner fairing.

Once removed the engineer will see a flange with 30 bolt locations, 10 of which attach the spinner fairing brackets to the spinner flange. The remaining 20 positions are used as possible trim balance positions.

Note: All 30 positions attach the spinner to the support ring.

The 10 bracket positions have bolts that use the brackets to spread the fastening load, much like a washer. Trim balance weights must not be fitted to a bracketed position.

The remaining twenty bolts have four (4) possibly different size washers that are captive to the bolt; as such they are classed as assemblies.

These assemblies are as follows:

1. Standard bolt and washer p/n BLT 5682.
2. Trim balance weight p/n BLT5563 (35.71g).
3. Trim balance weight p/n BLT5679 (52.77g).
4. Trim balance weight p/n FW24476 (76.5 g).

To trim the LP Compressor the engineer must first record the trim balance weights installed i.e. remove the spinner fairing and make a visual record of the p/n on the head of the bolt.

The part numbers of the weight assemblies and their location must then be entered into the maintenance laptop and the spinner fairing re-fitted.

The trim balance test should then be carried out after which the test may provide a new weight solution i.e. different weight assembly p/n's in different spinner flange positions.

The engineer will then remove the spinner fairing and install or change the spinner weight assemblies to the new positions.

With the spinner fairing re-fitted a check run may be carried out to ensure the fan vibration figures are within the AMM limits before returning the aircraft to service.

© Rolls-Royce plc 2018. Use or disclosure is subject to the legend on the Notice to Holder page

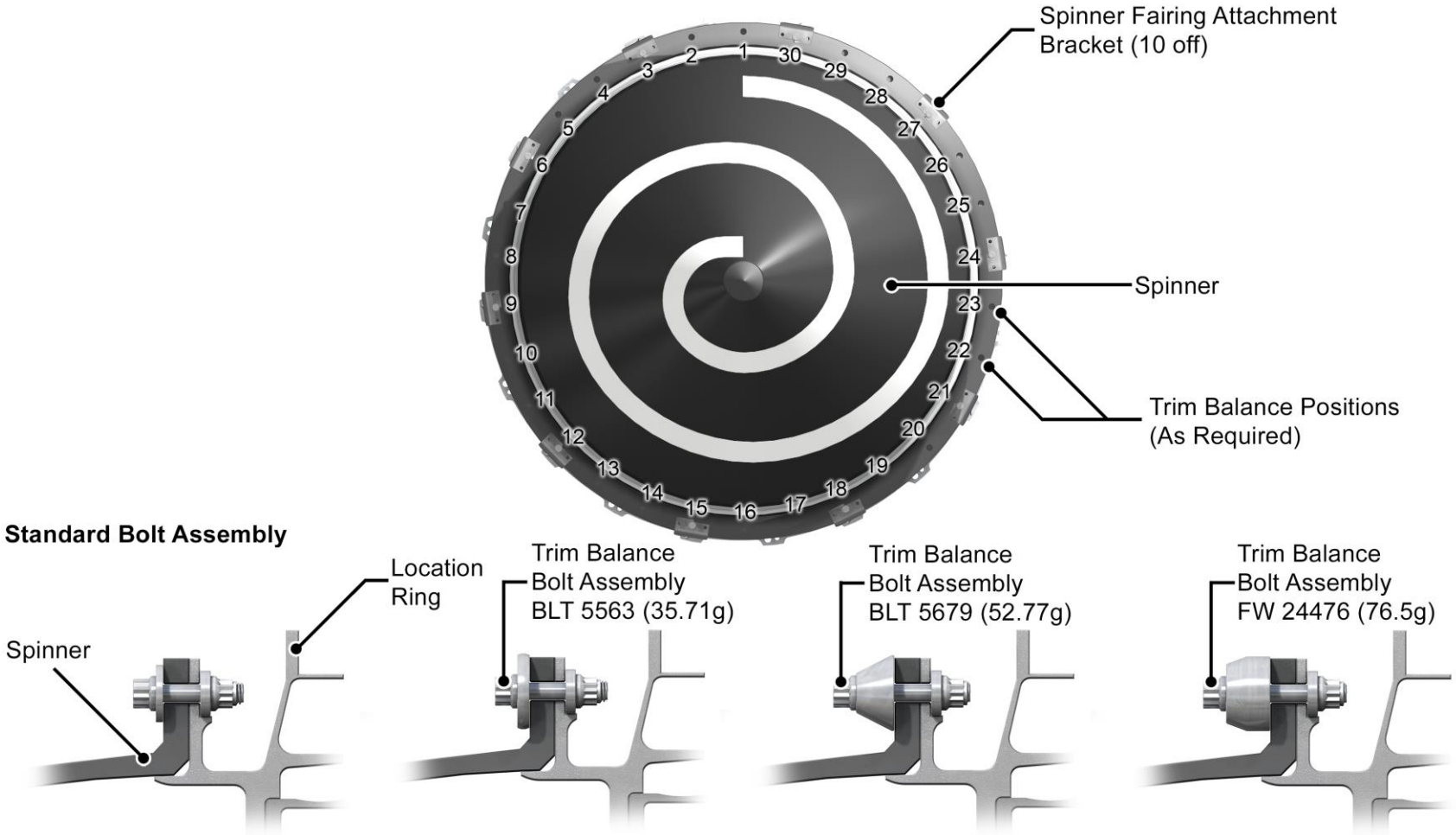

T1000 TEN_LBM_M04_077_01P

LP COMPRESSOR TRIM BALANCING

© Rolls-Royce plc 2018. Use or disclosure is subject to the legend on the Notice to Holder page

Mechanical Arrangement Wiring Diagrams

Introduction

Below is a wiring schematic of the associated units connected to the EEC. This is only a representation of the actual connectors but all plugs and connectors are indicated with the reference identifiers. This should be used for reference only and not be used as a definitive document. For a more detailed explanation (pins and sockets for troubleshooting purposes etc) and for further details, then always refer to the actual wiring diagrams as given within the AMM or FIM electronic documentation.

© Rolls-Royce plc 2018. Use or disclosure is subject to the legend on the Notice to Holder page

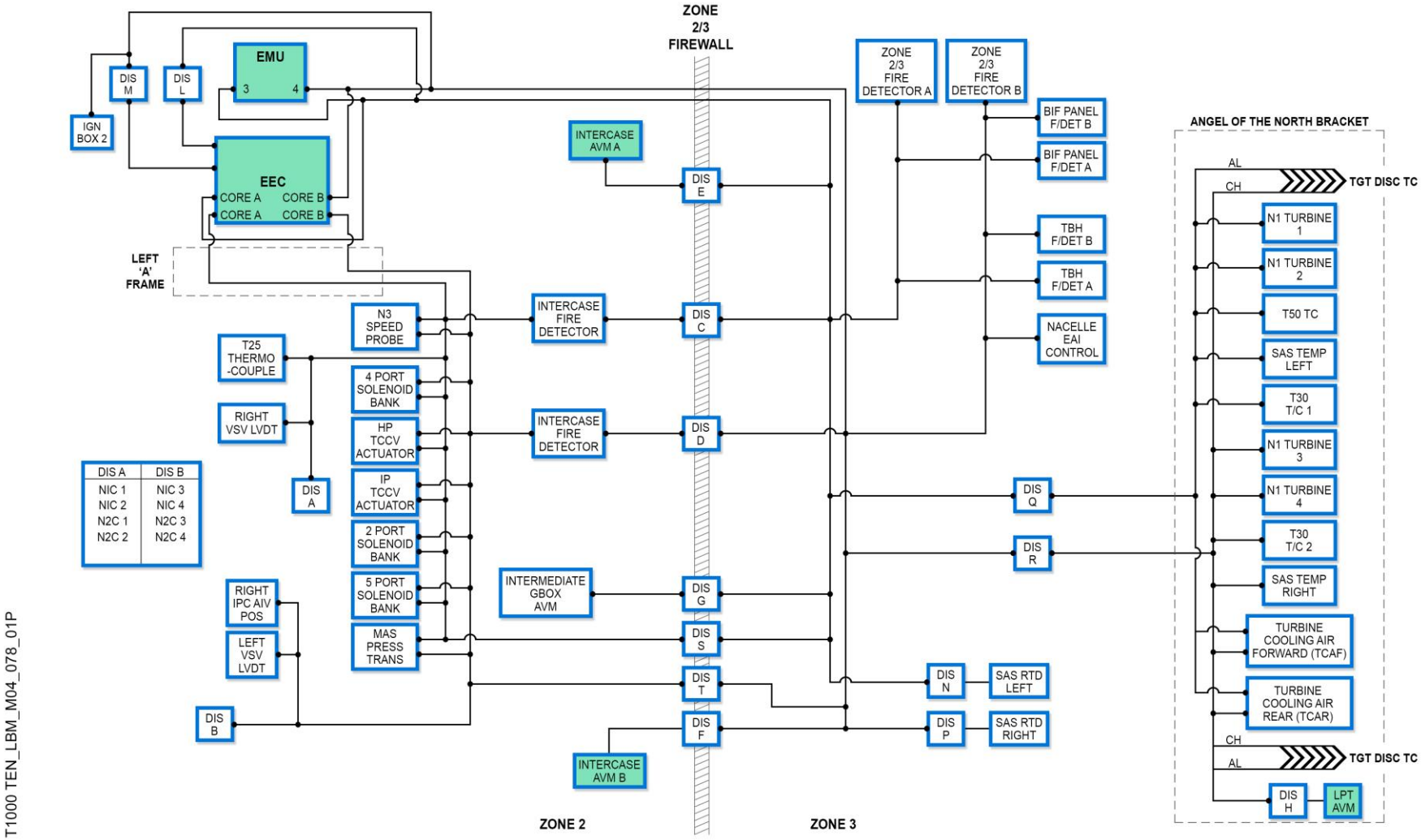

ENGINE WIRING DIAGRAM

© Rolls-Royce plc 2018. Use or disclosure is subject to the legend on the Notice to Holder page

Mechanical Arrangement Wiring Diagrams

Introduction

Below is a wiring schematic of the associated units connected to the EEC. This is only a representation of the actual connectors but all plugs and connectors are indicated with the reference identifiers. This should be used for reference only and not be used as a definitive document. For a more detailed explanation (pins and sockets for troubleshooting purposes etc) and for further details, then always refer to the actual wiring diagrams as given within the AMM or FIM electronic documentation.

© Rolls-Royce plc 2018. Use or disclosure is subject to the legend on the Notice to Holder page

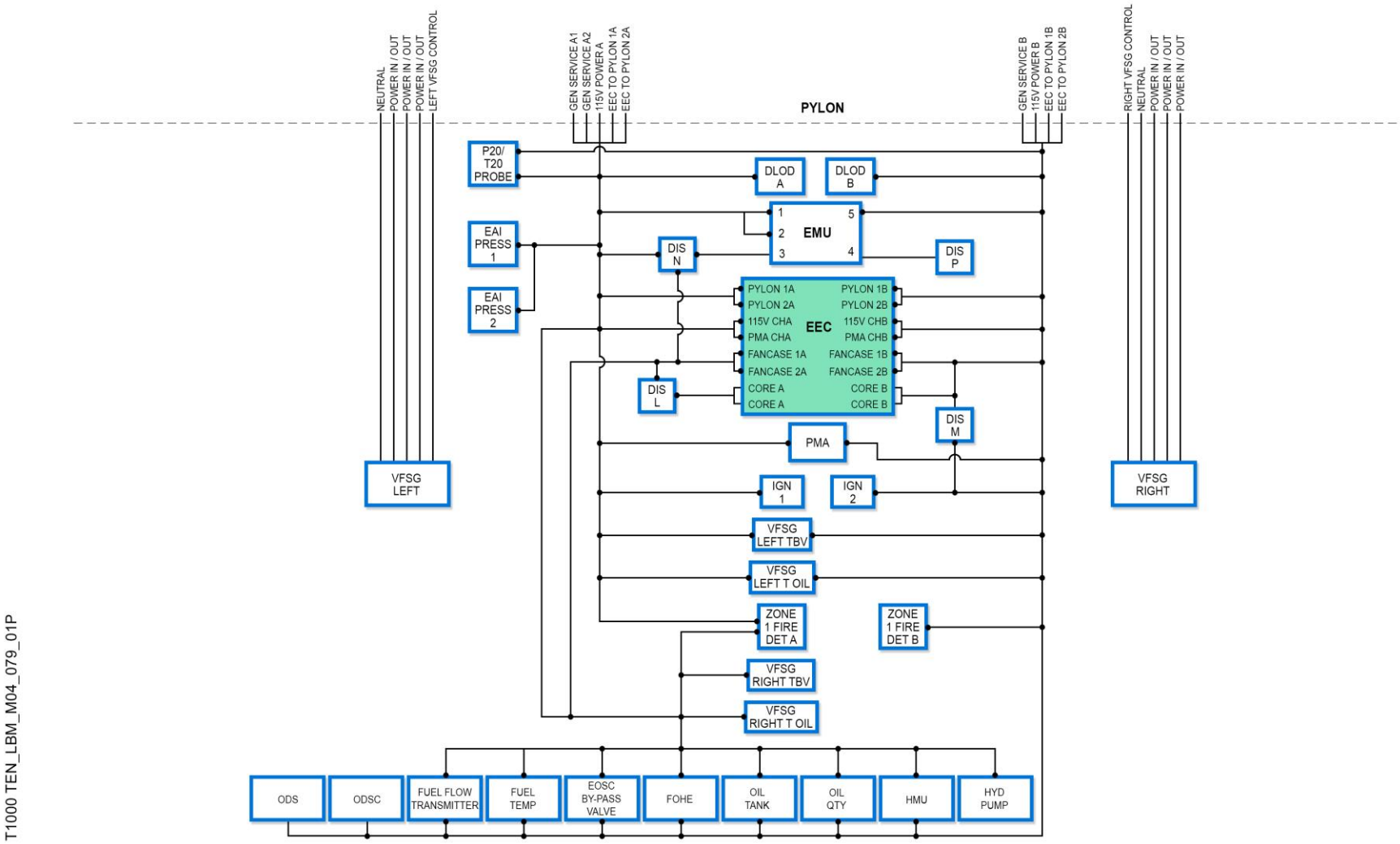

T1000 TEN_LBM_M04_079_01P

ENGINE WIRING DIAGRAM

© Rolls-Royce plc 2018. Use or disclosure is subject to the legend on the Notice to Holder page

END OF SECTION

Section 5 – Electronic Engine Control System (EECS)

ATA Chapters Covered:

73 and 74

© Rolls-Royce plc 2018. Use or disclosure is subject to the legend on the Notice to Holder page

Electronic Engine Control System (EECS)

Introduction

The Trent 1000 Electronic Engine Control System (EECS) uses the Full Authority Digital Engine Control (FADEC) form of control. This provides all the functions needed to start, run and shutdown the engine, communicate with the Engine Health Monitoring (EHM) system, the aircraft for flight deck indications, and to provide maintenance information.

In order to carry out its function the EECS employs numerous devices to monitor the engine / aircraft. The Engine Electronic Controller (EEC) processes the data it receives from these devices and outputs appropriate control and condition signals to the engine / aircraft and also supplies relevant information to the EHM system and the flight deck.

The EECS system must carry out its function while maintaining a safe and efficient engine condition throughout the entire operating envelope of the engine.

However, the flight crew retain ultimate authority over the engine via the fuel RUN / CUTOFF switch, which is hardwired directly to the Shut-off Servo Valve in the Hydro-Mechanical Unit (HMU). Selecting the switch to the CUTOFF position overrides any EECS commands and shuts the engine down.

The EECS system provides a degree of fault tolerance by using a dual channel system. If a fault occurs that affects correct functioning, the other channel can take control of the function, minimising the risk of faults developing into a system or engine failure, and at the same time, maximising engine/aircraft availability.

EECS Functions

The following functions are provided by the EECS

- EECS Power supplies
- Data Entry Plug
- Engine Protection
- Engine Health Monitoring (EHM)
- Flight Deck Indications (Section 6)
- Engine Heat Management (Sections 7 & 8)
- Thrust Management (Section 8)
- Fuel Control & Shutdown (Section 8)
- Airflow Control (Section 9)
- Secondary Air System switching (Section 10)
- Core Engine Anti-Ice control (Section 11)
- Starting & Ignition control (Section 13)
- VFSG Oil Heat Management
- Thrust Reverser control (Section 2)
- Modulating Air System (MAS) control
- Turbine Case Cooling System control
- Maintenance system.

© Rolls-Royce plc 2018. Use or disclosure is subject to the legend on the Notice to Holder page

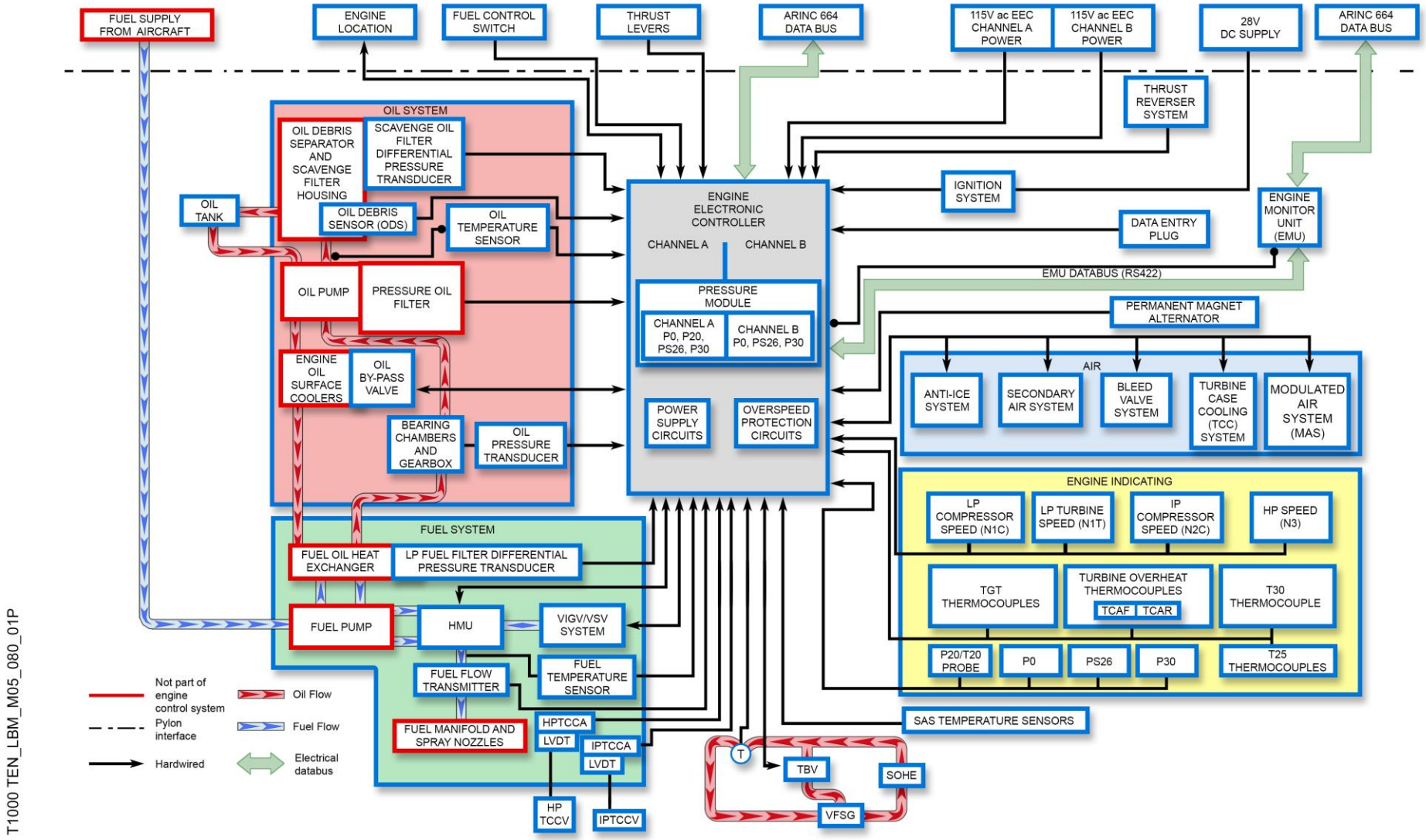

EECS OVERVIEW

© Rolls-Royce plc 2018. Use or disclosure is subject to the legend on the Notice to Holder page

Airframe / EECS Interfaces

The bulk of the airframe systems are installed in the forward and aft Electrical and Electronic Bay (EE Bay). The interfaces between these systems and the EECS are mainly passed through the digital data buses of the Common Data Network (CDN).

Common Data Network (CDN)

The CDN can be likened to a company's intranet that forms a digital communication network for the Boeing 787. Data is placed on the CDN for the intended recipient to retrieve. The Trent 1000 EECS communicates with the aircraft via the CDN highway using a common protocol, ARINC 664.

Common Computing Resource (CCR)

The Boeing 787 **C**ommon **C**ore System (CCS) uses left and right (CCR) cabinets, to process data for some of the aircraft systems that are connected to the CDN. Each CCR cabinet contains functional modules including the graphics generator that the primary display system uses.

Air Data

Inputs, from the aircraft and engine, provide independent sources of air data for the EECS. The parameters are

- Static Air Pressure – aircraft PStatic & engine P0.
- Total Air Pressure – aircraft PTotal & engine P20.
- Total Air Temperature – aircraft TAT & engine T20.

The Boeing 787 has a single twin-element TAT probe, three PStatic & three 3 PTotal probes. Aircraft air data values are transmitted to the CCS over the CDN via a Remote Data Concentrators (RDC). The EECS compares aircraft air data with engine air data to select the appropriate source.

Remote Power Distribution Unit (RPDU)

RPDUs distribute electrical power (115V AC or 28 VDC) to various systems as required.

Remote Data Concentrator (RDC)

The Boeing 787 has 21 RDCs located on the airframe. The RDCs connect different aircraft systems to the CDN, by changing analogue, discrete and ARINC 429 data into CDN data format and vice versa.

Main Engine Data Concentrator (MEDC)

Each engine has an MEDC, located in the pylon. The MEDC is a dual channel device that places a variety of engine related analogue signals onto the CDN.

These signals include

- T/R proximity sensors & Isolation Valve discrete,
- PDOS discrete,
- EAI signals,
- VFSG low oil pressure discrete,
- Engine oil quantity,
- Backup N2 engine speed
- Engine fire/overheat detection
- Hydraulic system pressure & temperature.

Common Motor Start Controllers (CMSCs)

There are a number of CMSC's that control various motors on the aircraft. For the engine each VFSG is allocated to a CMSC, which configures the VFSG to a starter or generator.

© Rolls-Royce plc 2018. Use or disclosure is subject to the legend on the Notice to Holder page

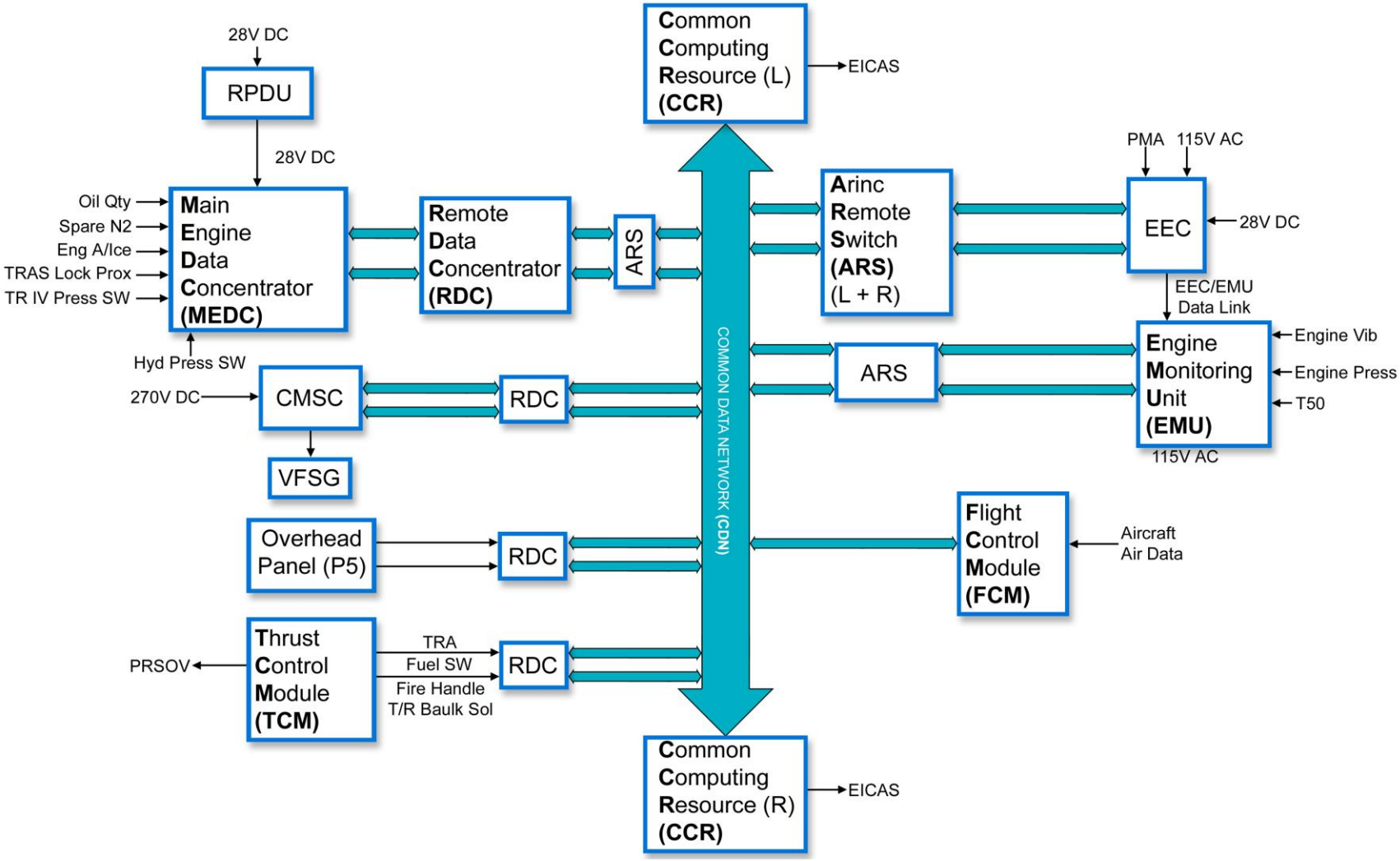

AIRFRAME / EECS INTERFACE

© Rolls-Royce plc 2018. Use or disclosure is subject to the legend on the Notice to Holder page

EECS Electrical Power Configuration

115V AC Supplies

Engine Electronic Controller (EEC) Power

The EEC is the central processor of the EECS and is powered by its own Permanent Magnet Alternator (PMA) when the engine is running. For ground maintenance and during starting, when IP speed is less than 6%, and for failures of the PMA, the aircraft's L(R) Main AC Bus provides an alternative 115V AC power source to the EEC.

Engine Monitoring Unit (EMU) Power

The EMU is powered by 115V AC power from the aircraft's L(R) Main AC Bus via an RPDU.

P20/T20 Probe Heat

The P20/T20 probe installed in the air intake is heated to prevent ice blocking the probe. The heating element in the probe is supplied with 115V AC from the aircrafts L (R) Main AC Bus via an RPDU.

28V DC Supplies

Ignition System 1 & 2

Aircraft 28V DC is used to energise the ignition systems when the Fuel Control Switch is placed in the RUN position.

Pressure Raising and Shut Off Valve (PRSOV)

Aircraft 28V DC is used to energise the PRSOV shut-off torque motor windings closed, and shutdown the engine when the RUN / CUT OFF switch is moved to the CUT OFF position.

Thrust Reverser Unit (TRU) Isolation Valve (IV) Solenoid

The EEC energises the IV solenoid using the Aircraft 28V DC power supplies via an RPDU. The switching function is in both channels of the EEC.

Thrust Reverser Unit (TRU) Directional Control Valve (DCV) Solenoid

Aircraft 28V DC from the aircraft's L (R) Main 28V DC Bus is used by the EEC to energise the TRU DCV solenoid via an RPDU. The switching function is in both channels of the EEC

© Rolls-Royce plc 2018. Use or disclosure is subject to the legend on the Notice to Holder page

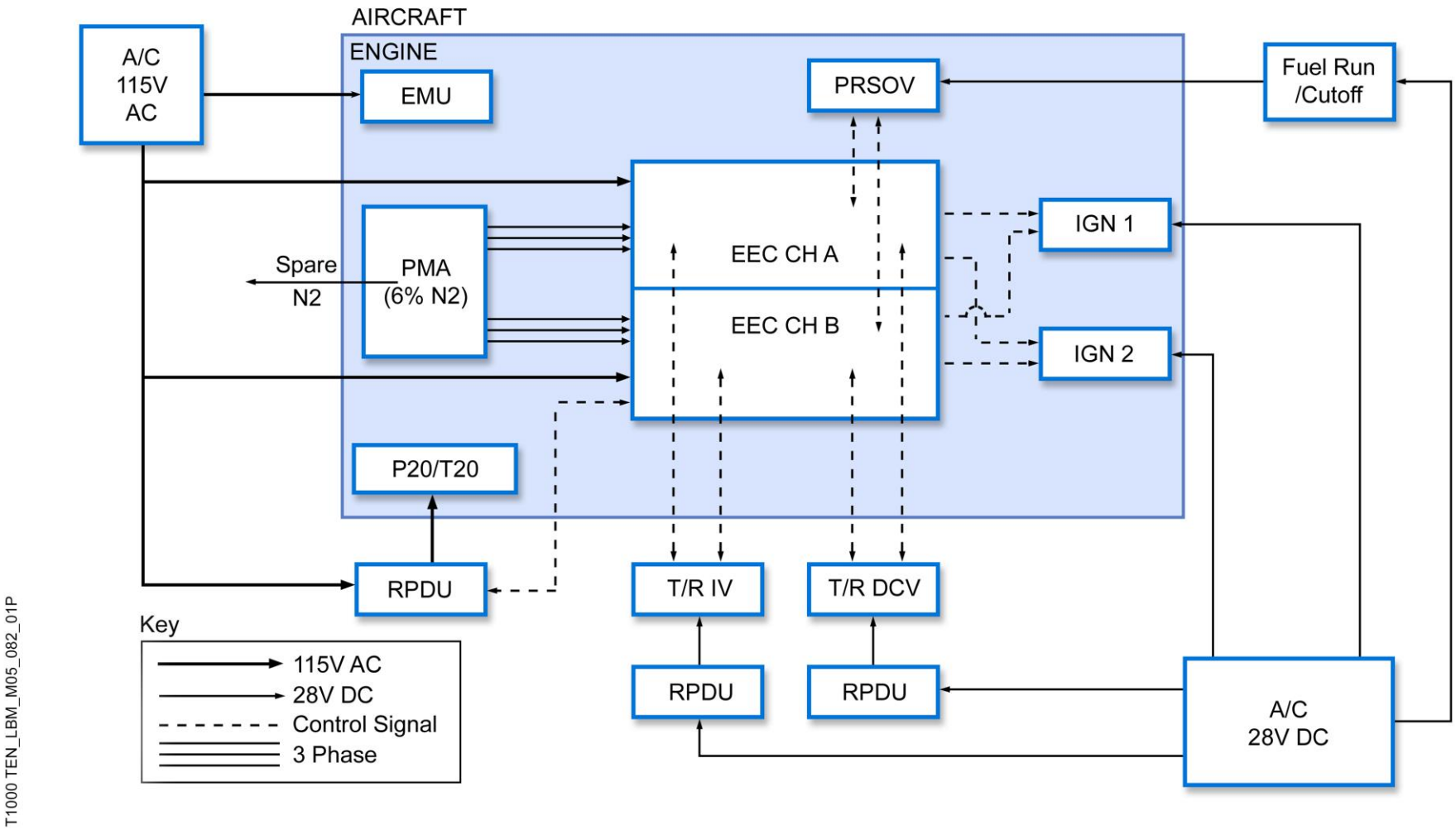

EECS ELECTRICAL POWER CONFIGURATION

© Rolls-Royce plc 2018. Use or disclosure is subject to the legend on the Notice to Holder page

Permanent Magnet Alternator (PMA)

Purpose

To provide the main source of electrical power for the EEC when the engine is running and to provide a back-up IP shaft speed (N2) signal to the aircraft, independently of the EEC.

Location

The PMA is located on the front face of the external gearbox.

Description

The PMA consists of two separate Line Replaceable Units (LRUs) – a Stator and Rotor. They are not supplied as matched pairs.

The PMA has two independent 3-phase windings, each providing a separate source of AC power to their respective EEC channels.

At engine speeds between 0 to 6% N2, the output from the PMA is insufficient to power the EEC, and aircraft electrical power is used instead. Once the N2 speed is greater than 6% the PMA is used to power to the EEC.

A single-phase winding within the PMA sends a back-up N2 signal directly to the airframe via the pylon-mounted MEDC. Since the IP shaft drives the PMA, the output frequency of this signal is proportional to N2 over the 10 to 120% N2 speed range. It is used to display engine N2 speed in the event of a control system communication failure.

© Rolls-Royce plc 2018. Use or disclosure is subject to the legend on the Notice to Holder page

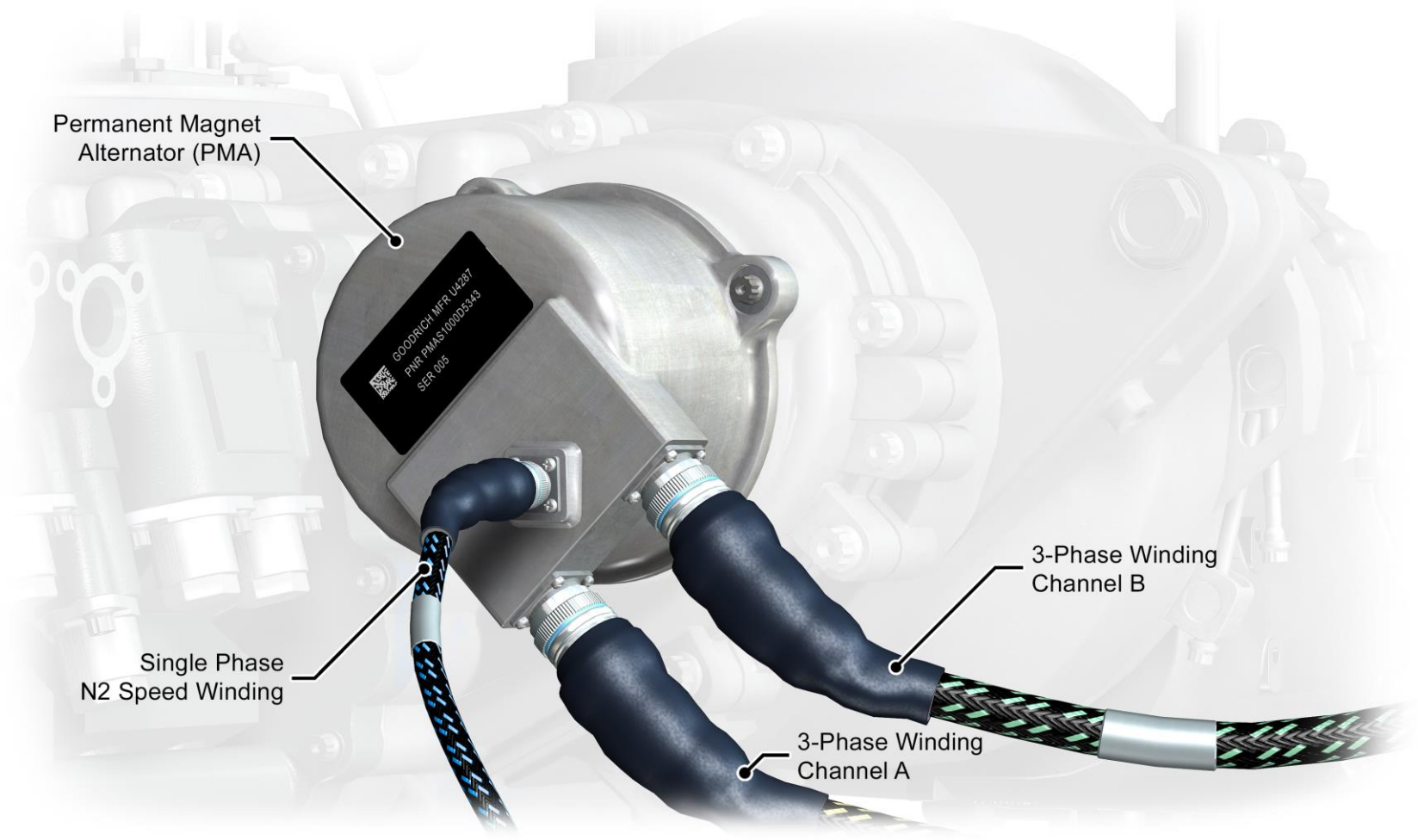

T1000 TEN_LBM_M05_083_01P

PERMANENT MAGNET ALTERNATOR

© Rolls-Royce plc 2018. Use or disclosure is subject to the legend on the Notice to Holder page

Engine Electronic Controller (EEC)

Purpose

The EEC is the central control unit of the EECS. It is a dual channel computer system that interacts with a series of engine and aircraft interfaces to manage engine starting & shutdown, thrust setting, engine protection and TRU control.

Location

The EEC is located on the left side of the engine fan case at approximately the 9 o' clock position, and is secured by bolts fitted through four anti-vibration mounts.

EEC Architecture

An array of engine and aircraft sensors sends information to two virtually identical, but independent electronic circuits, inside the EEC called Channel A & Channel B.

Both channels have their own separate power supplies, and can manage all the functions needed for engine control independently.

In usual operation both channels are powered but only one channel is "in control." Each channel will be forced into control every other power up, providing that both channels health score is satisfactory.

Each channel contains two computers, a Control Computer and a Protection Computer. The Control Computer performs the engine control functions and the Protection Computer independently monitors for hazards and shuts the engine down if a major hazard is detected. The Protection Computers of both channels monitor for hazards even when their respective channel is not in control.

EEC Health Score

The EEC incorporates a channel health function that is used to determine which channel is best able to control the engine and is dependent on a fault's type and criticality. The higher the score the less capable the channel is to control the engine.

Power Supply and Selection

Each channel of the EEC receives its own power supply from the PMA and aircraft 115V AC. The EEC converts both sources of power into a 45V DC voltage and selects power from whichever source gives the highest voltage to form the Intermediate Power Rail (IPR).

The PMA voltage is deliberately set slightly higher than the aircraft voltage so that the PMA voltage is always selected when it is available i.e. above 6% N2.

Inputs and Outputs

There are two main types of sensor input from the engine to the EEC:

- Control sensors – provide signals needed for closed loop control of the engine.
- Condition sensors – indicate engine conditions that do not directly affect closed loop control.

The EEC uses the inputs it receives to generate controlling outputs to the torque motors and solenoids of the various systems that interact with the EECS. The EEC also outputs condition and status information to the EHM system and the aircraft.

A dual channel Data Entry Plug (DEP) is plugged into a connector at the bottom of the EEC to provide unique engine data to the EEC.

© Rolls-Royce plc 2018. Use or disclosure is subject to the legend on the Notice to Holder page

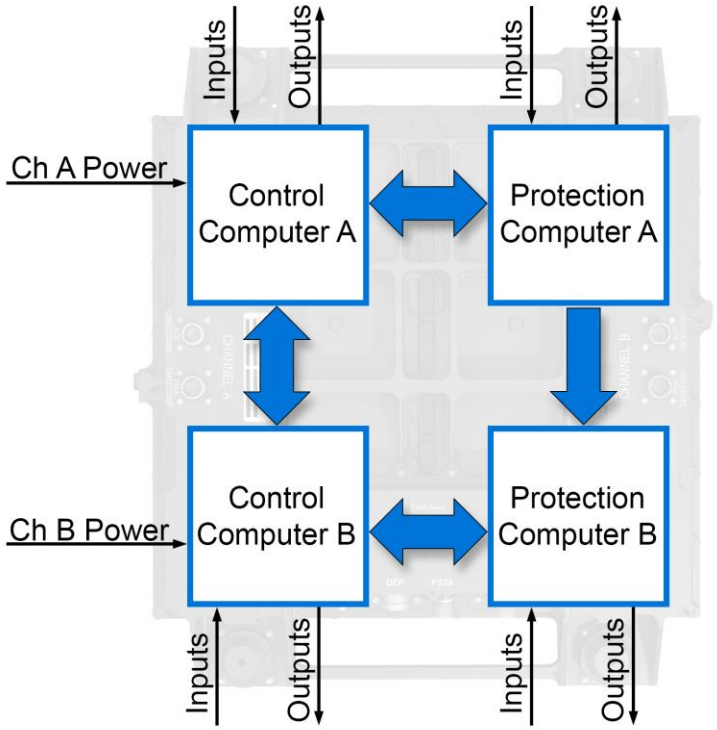

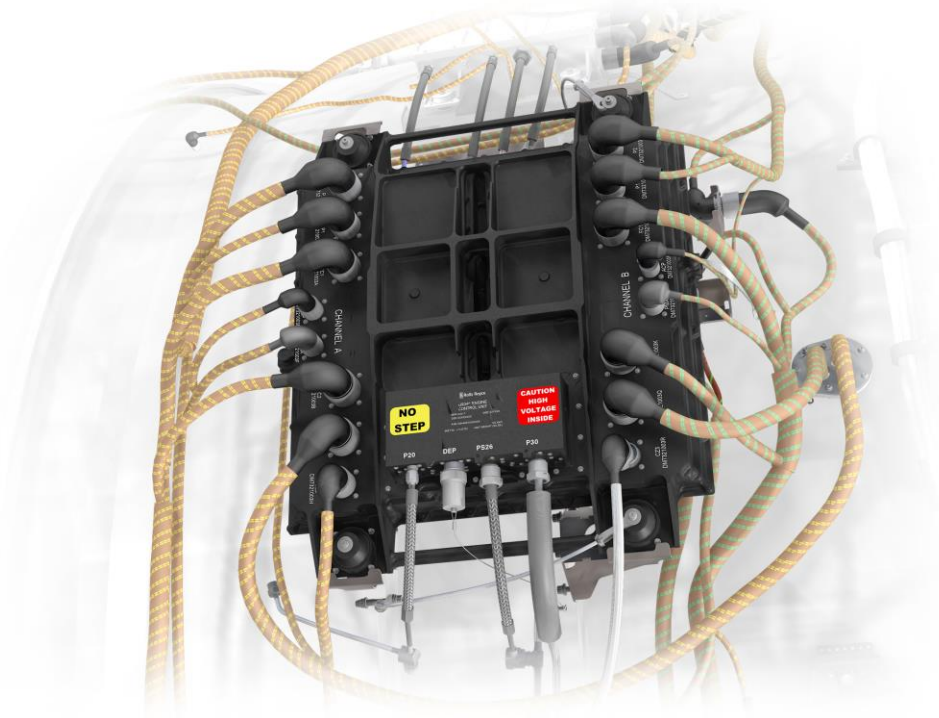

T1000 TEN_LBM_M05_084_01P

ENGINE ELECTRONIC CONTROLLER (EEC)

© Rolls-Royce plc 2018. Use or disclosure is subject to the legend on the Notice to Holder page

Engine Over-Threat Protection Systems

The Trent 1000 EEC has five protection systems, each designed to detect and react against a range of different threats, which if not otherwise accommodated, may develop into more hazardous events.

LP Turbine Overspeed System (LPTOS)

Introduction

In the event of a break in the LP turbine shaft, the turbine would be freed from its role of driving the LP compressor. If ignored such an event would lead to a turbine overspeed with a potential for the release of high-energy debris outside the confines of the engine.

Purpose

To provide rapid detection and accommodation of an LPT overspeed.

Description

If an LPT overspeed is detected the LPTOS function will automatically:

- Stop fuel flow to the engine.
- Open all bleed valves.
- Move the VSVs to the closed (low speed) position.

These actions minimise the peak turbine overspeed, thereby reducing the likelihood of an uncontained turbine failure.

An LP turbine overspeed is detected by comparing measured LP compressor and turbine speeds.

These measurements are obtained from 4 LP compressor speed probes and 4 LP turbine speed probes. The speed probe signals are sent to the EEC Protection Computers and compared in the following combinations:

Channel A

- One LP Compressor speed probe (N1C-1) and one LP Turbine speed probe (N1T-1).
- One LP Compressor speed probe (N1C-2) and one LP Turbine speed probe (N1T-2).

Channel B

- One LP Compressor speed probe (N1C-3) and one LP Turbine speed probe (N1T-3).
- One LP Compressor speed probe (N1C-4) and one LP Turbine speed probe (N1T-4).

LPTOS Shaft Breakage Detection

An LP Turbine shaft breakage is detected in one of two ways:

- Low Power – Comparison of Turbine and Compressor speeds to a threshold.
- High Power – Comparison of Turbine and Compressor speeds against one another.

Either channel's Protection Computers can independently detect a shaft breakage and if deemed valid will:

- Energise the PRSOV torque motor in the HMU to shut off the fuel flow within 2ms of the breakage being detected.

The channel in control will then:

- Open all the handling bleed valves.
- Close the VSVs i.e. moved to the low speed stop.

The function is then latched until the flight crew reset the EEC by moving the fuel switch from the RUN to CUTOFF.

BITE Checks

The LPTOS systems are subject to a BITE test to confirm correct system operation.

© Rolls-Royce plc 2018. Use or disclosure is subject to the legend on the Notice to Holder page

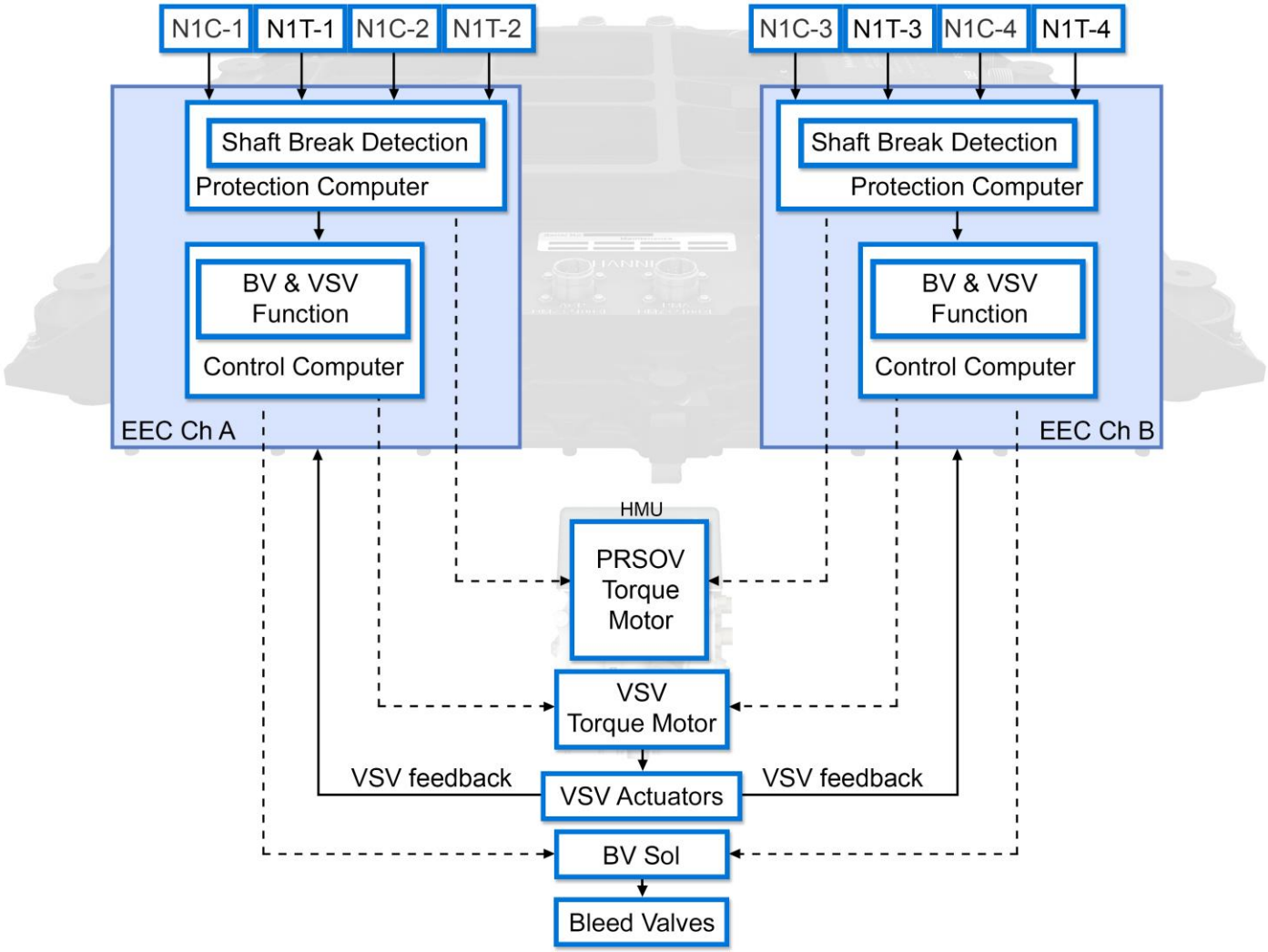

T1000 TEN_LBM_M05_086_01P

LP TURBINE OVERSPEED SYSTEM

© Rolls-Royce plc 2018. Use or disclosure is subject to the legend on the Notice to Holder page

Engine Over-Threat Protection Systems

IP Turbine Overspeed System (IPTOS)

Introduction

In the event of a break in the IP turbine shaft the turbine would be released from its role of driving the IP compressor. If ignored such an event would lead to a turbine overspeed with a potential for the release of high energy debris outside the confines of the engine.

Purpose

To provide rapid detection and accommodation of an IP Turbine overspeed.

Description

If an IP Turbine overspeed is detected the IP turbine overspeed function will automatically:

- Stop fuel flow to the engine.
- Open all the HP & IP handling bleed valves.
- Move the Variable stator vanes to the low speed position.

These actions minimise the peak turbine overspeed, thereby reducing the likelihood of an uncontained failure.

The EEC monitors inputs from P30, altitude; and IP and HP speed probes to detect the conditions under which an IP shaft failure may occur.

The speed probe signals are sent to each channel of the EEC as follows:

- Two IP Compressor Speed Probes (N2C-1 and N2C-2) and one HP Speed Probe (N3-1) are provided to channel A.
- Two IP Compressor Speed Probes (N2C-3 and N2C-4) and one HP Speed Probe (N3-2) are provided to channel B

IPTOS Detection

Either channel's overspeed function can independently detect a shaft breakage and if deemed valid will:

- Energise the PRSOV torque motor in the HMU to shut off the fuel flow.

The channel in control will then:

- Open all the handling bleed valves.
- Close the VSVs i.e. moved to the low speed stop.

The function is then latched until the flight crew move the fuel switch from the RUN to the CUTOFF.

BITE Checks

The IPTOS systems are subject to a BITE test to confirm correct system operation.

© Rolls-Royce plc 2018. Use or disclosure is subject to the legend on the Notice to Holder page

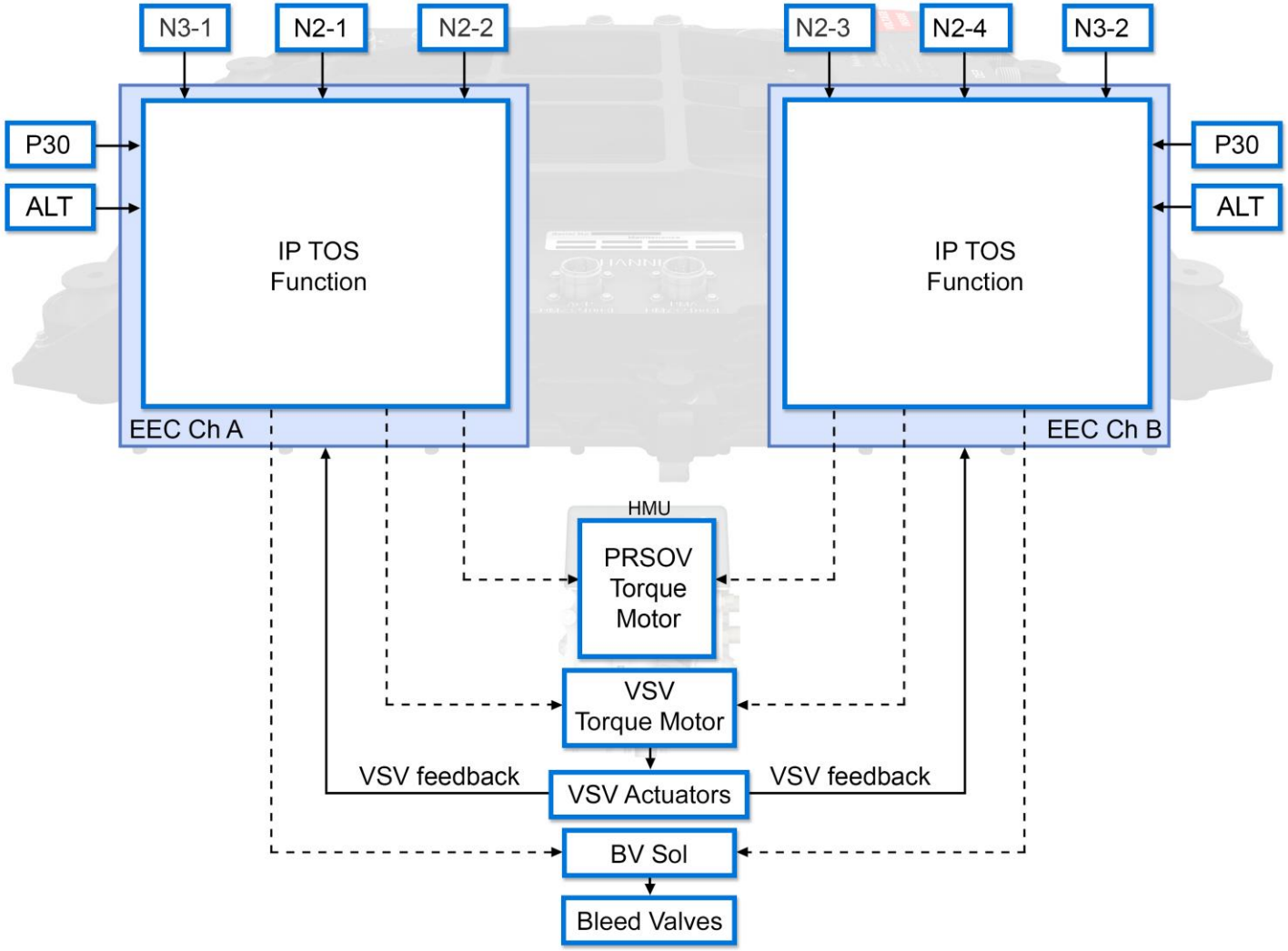

T1000 TEN_LBM_M05_087_01P

IP TURBINE OVERSPEED SYSTEM

© Rolls-Royce plc 2018. Use or disclosure is subject to the legend on the Notice to Holder page

Engine Over-Threat Protection Systems

LP Shaft Overspeed System

Introduction

An overspeed of the LP Shaft may be caused by a malfunction of the control system to correctly regulate fuel flow.

Purpose

The purpose of the LP shaft overspeed function is to detect an and accommodate an N1 overspeed condition and minimise the potential release of high-energy debris by rapidly shutting off fuel flow to the Fuel Spray Nozzles.

Location

The LP Shaft Overspeed function resides in each channel of the Protection Computer of the EEC.

Description

Both channels of the Protection Computers (A and B) are capable of detecting an LP overspeed event by comparing the LP compressor speed to a threshold. The LP Turbine speeds are also used but as spares only should one of the compressor speed probes fail.

The Protection Computers receive the following speed signals:

Channel A

Two N1 compressor signals (N1C-1 and N1C-2) and one N1 Turbine signal (N1T-2).

Channel B

Two N1 compressor signals (N1C-3 and N1C-4) and one N1 Turbine signal (N1T-4).

Either channel of the EEC can detect and initiate an overspeed event independently of the other channel, whether the channel is in control or not, providing two valid speed signals are available i.e.

- Compressor and Compressor or
- Compressor and Turbine.

If a valid event is detected the appropriate channel of the PRSOV torque motor in the HMU is energised to stop fuel flow and initiate an engine shutdown, after which the function is latched until the EEC is reset by toggling the RUN / CUT OFF switch from the RUN to CUTOFF.

If two of the three available signals within a channel are invalid then the function in that channel is disabled but the other channel will still provide protection.

BITE Checks

The LP shaft overspeed system is subject to a BITE test to confirm correct system operation.

© Rolls-Royce plc 2018. Use or disclosure is subject to the legend on the Notice to Holder page

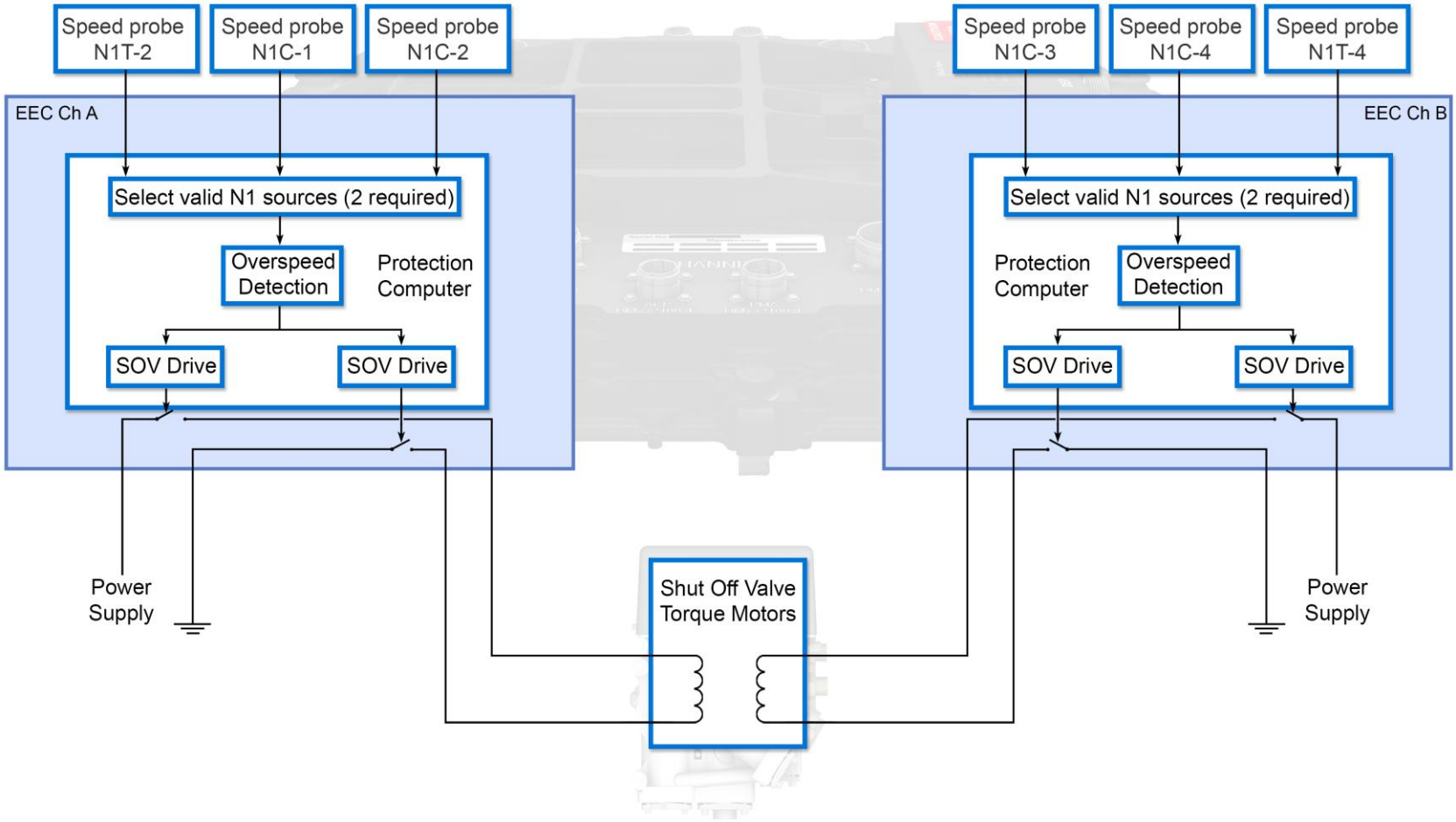

T1000 TEN_LBM_M05_088_01P

LP SHAFT OVERSPEED SYSTEM

© Rolls-Royce plc 2018. Use or disclosure is subject to the legend on the Notice to Holder page

IP Shaft Overspeed System

Introduction

An overspeed of the IP Shaft may be caused by a malfunction of the control system to correctly regulate fuel flow.

Purpose

The purpose of the IP shaft overspeed system is to detect an overspeed condition of the IP compressor and minimise the potential release of high-energy debris by rapidly shutting off fuel flow to the Fuel Spray Nozzles.

Location

The N2 shaft overspeed function resides in the Protection Computers of the EEC.

Description

Both channels of the Protection Computers (A and B) are capable of detecting an IP overspeed event by comparing the compressor speeds to a threshold.

The Protection Computers receive the following speed signals:

Channel A

Two N2 Compressor signals are denoted as N2-1 and N2-2.

Channel B

Two N2 Compressor signals are denoted as N2-3 and N2-4.

Either channel of the EEC can detect and initiate an overspeed event independently of the other channel, whether the channel is in control or not, providing two valid speed signals are available.

If a valid event is detected the appropriate channel of the PRSOV torque motor in the HMU is energised to stop fuel flow and initiate an engine shutdown, after which the function is latched until the EEC is reset by toggling the RUN / CUT OFF switch from RUN to CUTOFF.

If either of the two available speed signals is invalid then the function in that channel is disabled but the other channel will still provide protection.

BITE Checks

The IP shaft overspeed system is subject to a BITE test to confirm correct system operation.

© Rolls-Royce plc 2018. Use or disclosure is subject to the legend on the Notice to Holder page

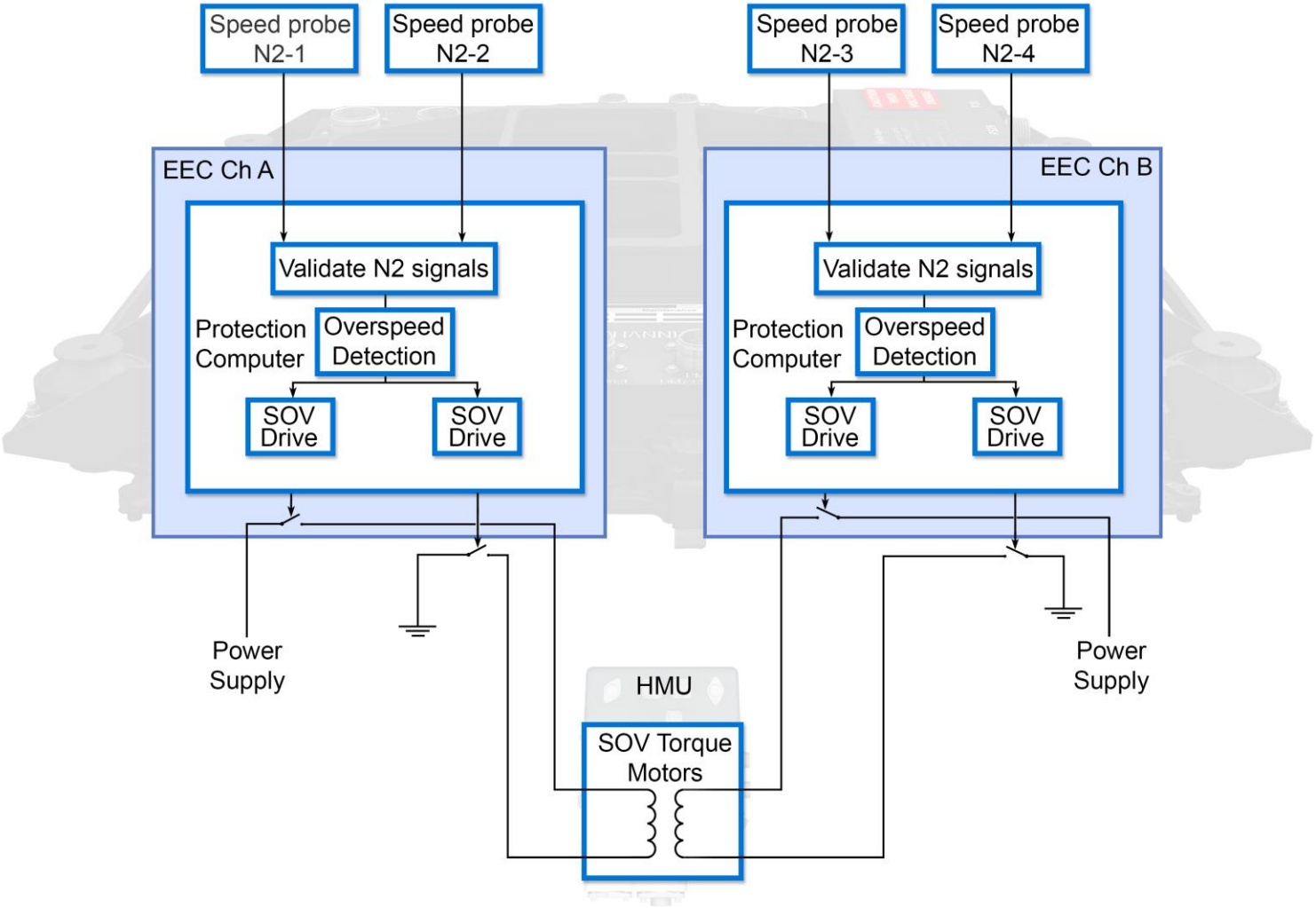

T1000 TEN_LBM_M05_089_01P

IP SHAFT OVERSPEED SYSTEM

© Rolls-Royce plc 2018. Use or disclosure is subject to the legend on the Notice to Holder page

Engine Over-Threat Protection Systems

Thrust Control Malfunction Accommodation (TCMA)

Introduction

Aircraft such as the 787 that have two engines may be prone to directional control problems if one-engine experiences an uncontrolled or uncommanded high thrust when low thrust has been commanded.

For example, during landing when the engine throttles are moved by the flight crew to idle power prior to selection of reverse thrust but the engine is not decelerating at the rate that is expected by the EEC, during ground runs or more importantly during an aborted take-off situation.

Location

The TCMA protection function resides in the Protection Computers of each channel of the EEC.

Purpose

The purpose of the TCMA over threat system is to detect and cater for a Thrust Control Malfunction (TCM) event when the aircraft is on the ground thus preventing loss of directional control.

Description and Operation

Either protection computer of each EEC channel processes the TCMA function. Either channel can accommodate a TCMA event regardless of which channel is in control. Each channel receives the following signals:

- Aircraft speed / altitude and ‘on the ground’ signals.
- Throttle Resolver Angle (TRA).
- Thrust Reverser Cowl position data.
- LP shaft speed (two compressor and one turbine).

TCMA Armed

TCMA becomes armed and ready to detect a thrust control malfunction (TCM) when all of the following conditions are satisfied:

- All three (3) LP speed signals are valid.
- Aircraft weight on wheels is confirmed.
- Aircraft speed is less than 200 knots and aircraft altitude is less than 15000ft.
- TRA is valid.
- Thrust Reverser Cowl position is confirmed as being less than 10% deployed.

If any of the above signals are invalid in a channel then that channel’s TCMA function is disabled and the status message ENG TCMA will be set.

TCMA Event

A TCM event is detected when the following are confirmed:

- TCMA is armed.
- N1 speed is above a threshold dependant on aircraft P0.
- The rate of N1 reduction is not following the deceleration schedule of the EEC.

If a TCM event is detected one or both of the two PRSOV torque motor protection coils in the HMU is energised to close the valve and stop fuel flow to shutdown the engine.

The function is latched until toggling RUN / CUT OFF switch from RUN to CUTOFF resets the EEC.

© Rolls-Royce plc 2018. Use or disclosure is subject to the legend on the Notice to Holder page

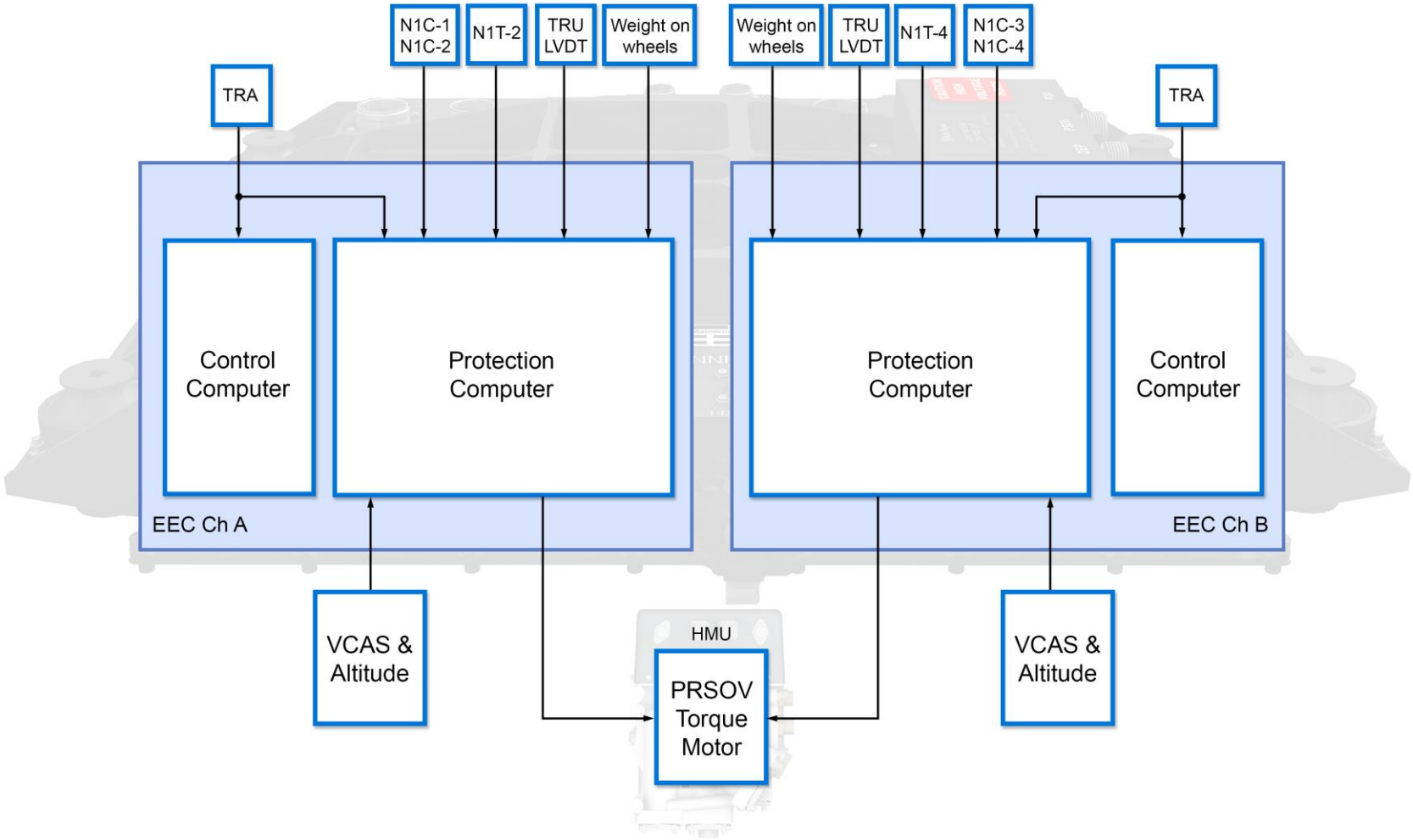

T1000 TEN_LBM_M05_090_01P

TCMA SYSTEM ARCHITECTURE

© Rolls-Royce plc 2018. Use or disclosure is subject to the legend on the Notice to Holder page

Data Entry Plug (DEP)

Location

The DEP is fastened to the LP Compressor Case by a lanyard and plugged into the bottom of the EEC by a dedicated connector.

Purpose

To provide configuration data to the EEC specific to the engine it is fitted to.

Description

The DEP contains two identical Electrically Erasable Programmable Read Only Memory (EEPROM) devices, one for each channel of the EEC.

During ‘power up’ the EEC reads and validates the content of the DEP, storing the information in its internal non-volatile memory (NVM). If during subsequent ‘power ups’ the validated information differs from the data already stored in the NVM of the EEC, the NVM is overwritten.

The data stored in the DEP is the same as that on the Engine Dataplates located on the LP Compressor Case.

DEP Contents

Both DEP EEPROMs are programmed with identical data

- **Engine Serial Number (ESN)**

  The ESN is a five-digit number with a valid range between 10000 and 19999. It used to indicate to the EEC which engine it is mounted on.

- **Engine Ratings**

  This is a numerical value between 1 and 121 that indicates to the EEC which of the rating and bump tables stored within the EEC is to be selected for use.

- **Turbofan Power Ratio (TPR) Trim**

  TPR is used as the main parameter for thrust control, as thrust cannot be measured on-wing. The EEC trims raw TPR by the value of the TPR trim stored in the DEP which is defined during the manufacturer’s type test. Trimming TPR in this way makes every engine of a given standard appear identical to the airframe.

- **Turbine Gas Temperature (TGT) Trim**

  TGT is used as an indirect measure of HP Turbine Entry Temperature (TET) since TET is too hot to directly measure. The EEC trims raw TGT by the value of TGT trim stored in the DEP which is defined during the manufacturer’s type test. Trimming TGT in this way makes every engine of a given standard appear identical to the airframe.

- **Engine Build Standard**

  The Engine Build Standard is used to ensure the EEC software is compatible with the engine to which it is installed.

- **Intermix (provision)**

  The Intermix option is provided to inform the EEC that different build standard of engines are installed to the same aircraft i.e. the installation of a base line engine and an upgraded engine.

DEP Programming

The DEP can be (re) programmed with valid data using a dedicated DEP programmer. The DEP should only be (re) programmed if:

- The DEP is new to the engine.
- There has been a change of engine rating.
- The trim values have changed post overhaul.

© Rolls-Royce plc 2018. Use or disclosure is subject to the legend on the Notice to Holder page

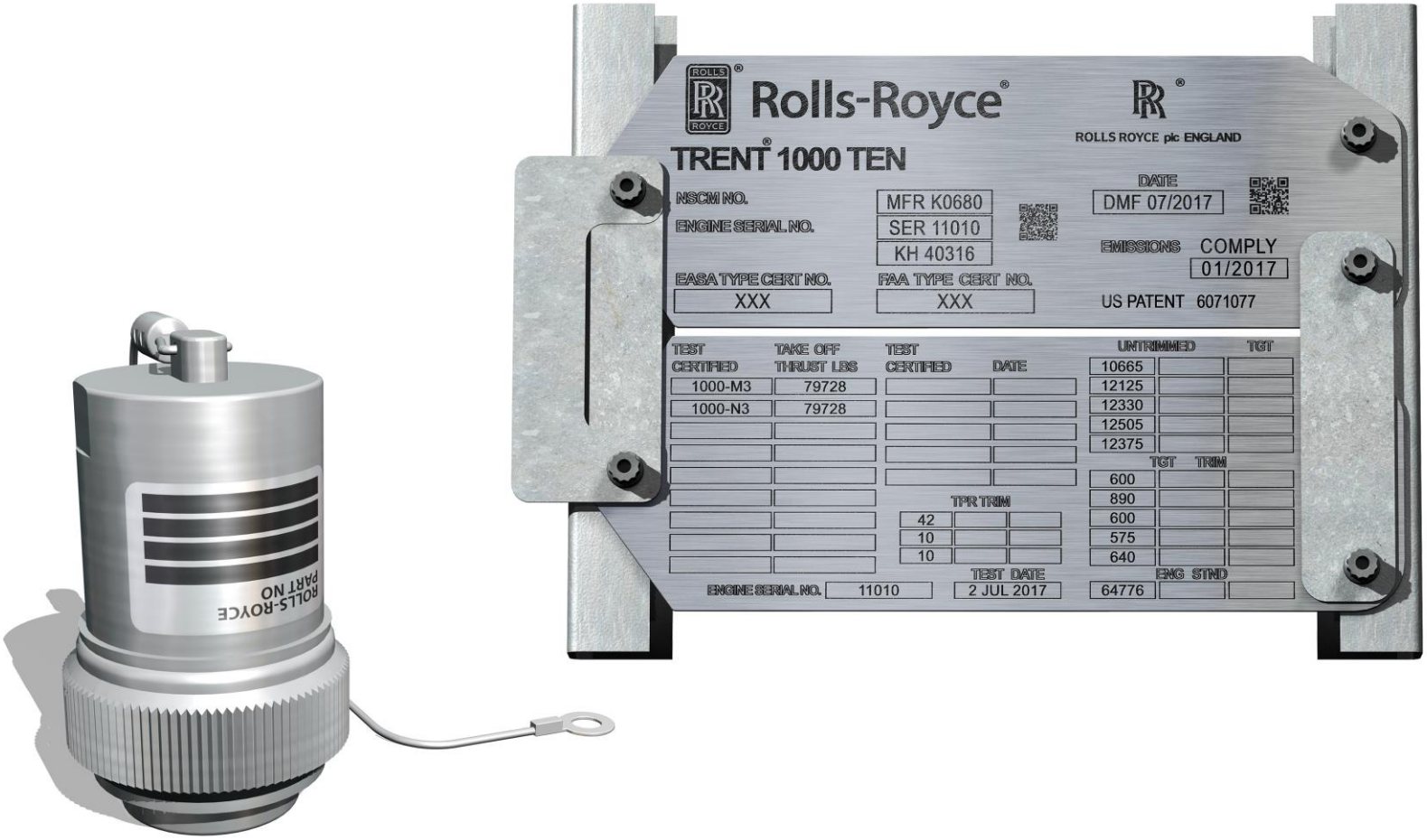

T1000 TEN_LBM_M05_091_01P

DATA ENTRY PLUG AND DATA PLATE

© Rolls-Royce plc 2018. Use or disclosure is subject to the legend on the Notice to Holder page

Engine Monitoring System

Introduction

The Trent 1000 Engine Monitoring System (EMS) is part of the EECS. The EMS has no controlling function but rather, employs a suite of sensors to provide data that permits the aircraft and associated Ground Support Stations (GSS) to predict, diagnose and assess impending engine problems before a failure occurs. The purpose of the health monitoring system is to ensure that Rolls-Royce and the airlines have the capability to predict maintenance requirements to maximise the operational benefits. The monitoring system will provide a flexible means of capturing engine data to allow Rolls-Royce to investigate unplanned events across the whole engine fleet.

Description

The EMS consists of a series of sensors that measure temperature, pressure, speed and vibration throughout the engine. The EMS sensors input data to a fancase mounted Engine Monitoring Unit (EMU), where it is processed and made available to the aircraft and / or GSS.

The EMU is made up of a Power Supply Module (PSM), two Signal Process Monitors (SPM1 and 2) together with two Main Processing Modules (MPM1 and 2). In addition, there is an internal temperature sensor so that in an ‘extreme’ temperature being detected, SPM2 and both MPMs will switch off in order to protect them.

The EMU will support the following functionality:

- Real Time Monitoring and Acquisition (QUICK).
- Vibration data to support flight deck displays (indicated in Flight Deck Units - the highest vibration level from either of N1, N2 or N3 is displayed).
- LP Trim Balance (one off balance calculation via CMCF to indicate trim balance weight positions).
- Engine Trending and Event Capture System (for report generation and transmission).
- Module cycle counting.

Engine Trending and Event Capture System

Engine Trending and Event Capture System (ETrECS) is responsible for the generation of the Engine Characteristic Trending (ECT) report and capability to detect engine problematic events. Event Capture (EC) in this instance is not history dependent, and simply relies on a set of relationships being met at that time. EC alerts should be sent back during flight via ACARS.

The ECT report is a flexible tool to facilitate the capture, storage and transmission of data to support a wide range of engine health management techniques. The full ECT report would normally be sent back on landing following engine shutdown.

Function

The ECT report and EC alerting should function such that any available parameter individually monitored or grouped together within the EMU could be analysed by Rolls-Royce Controls and Data Systems (CDS) or the airline. This may result in maintenance work requests being received by the airline to rectify a fault, or, investigate the possible cause of any deviation of a readout or performance change.

© Rolls-Royce plc 2018. Use or disclosure is subject to the legend on the Notice to Holder page

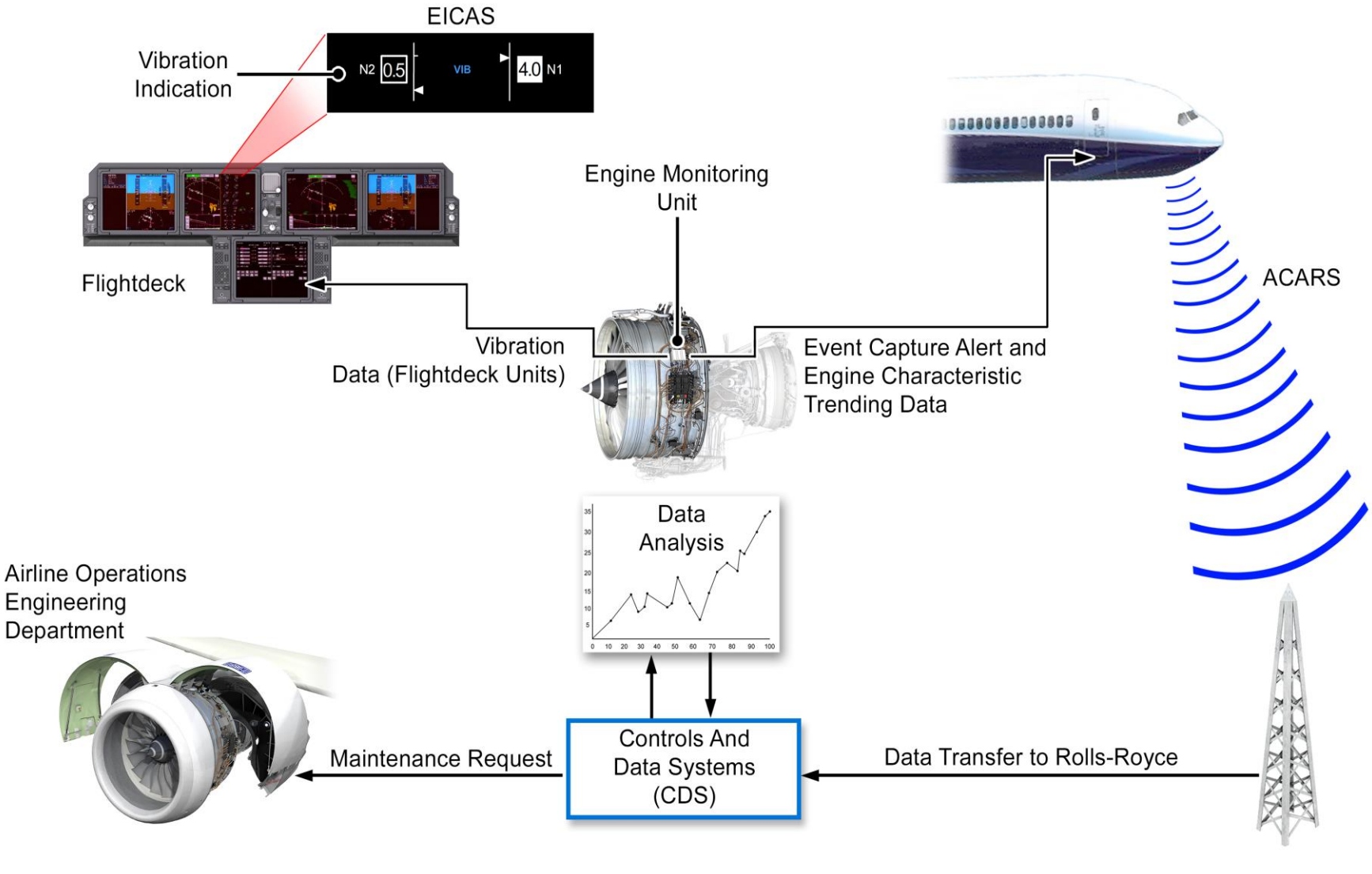

ENGINE HEALTH MONITORING SYSTEM

© Rolls-Royce plc 2018. Use or disclosure is subject to the legend on the Notice to Holder page

Engine Monitoring Unit (EMU)

Introduction

The Engine Monitoring Unit (EMU) forms part of the aircraft Health Monitoring System. It collects engine data before passing it to the File Server Module (FSM) for downloading to the Airline and Rolls-Royce.

Purpose

The EMU has two purposes. The first is to provide the Flight deck with an indication of engine vibration levels and the second to monitor the health of the engine.

Location

The EMU is located on the left side of the LP Compressor Case.

Description

The EMU is supplied by 115V AC power from the aircraft main AC bus. The EMU is a single channel device and the data needed to support the EMU functions, are transmitted to the aircraft Common Data Network via a bi-directional ARINC 664 Digital Data Bus.

A charge amplifier inside the EMU receives hard-wired broadband analogue vibration data from the following three engine locations.

- A dual channel vibration transducer mounted on the engine intermediate case (N1, N2 & N3 compressor vibration).
- A single channel vibration transducer mounted on the engine TBH (N1 turbine vibration).
- A single channel vibration transducer mounted on the intermediate gearbox (gearbox rotating assemblies).

Together with the hardwired speed signals from the EEC the EMU calculates the vibration levels and passes them to the aircraft via the CDN on a ‘highest wins’ basis.

Monitoring of the LP Compressor vibration also enables the EMU to trend the vibration and provide Trim Balance data to the aircraft and thus the airline and Rolls-Royce for forward maintenance planning.

Inputs and Outputs:

The following pressures and temperatures are input directly to the EMU:

- Fan Exit Pressure, P160 – Fan damage detection.
- HPC Entry Pressure, PS26 – Core damage detection.
- IPT Static Pressure, PS42 – Performance.
- LPT Static Pressure, PS44 – Performance.
- LPT Exit temperature, T50 – Performance.

The EMU uses six analogue speed signals, which are hardwired from the EEC. These are:

- Two LP Compressor speed signals (N1C-1 and N1C-2)
- One LP Turbine speed signal (N1T-1)
- Two IP speed signals (N2-1 and N2-2)
- One HP speed signal (N3-1)

In addition, Channel A of the EEC transmits additional digital data to the EMU via a one-way RS422 digital bus.

© Rolls-Royce plc 2018. Use or disclosure is subject to the legend on the Notice to Holder page

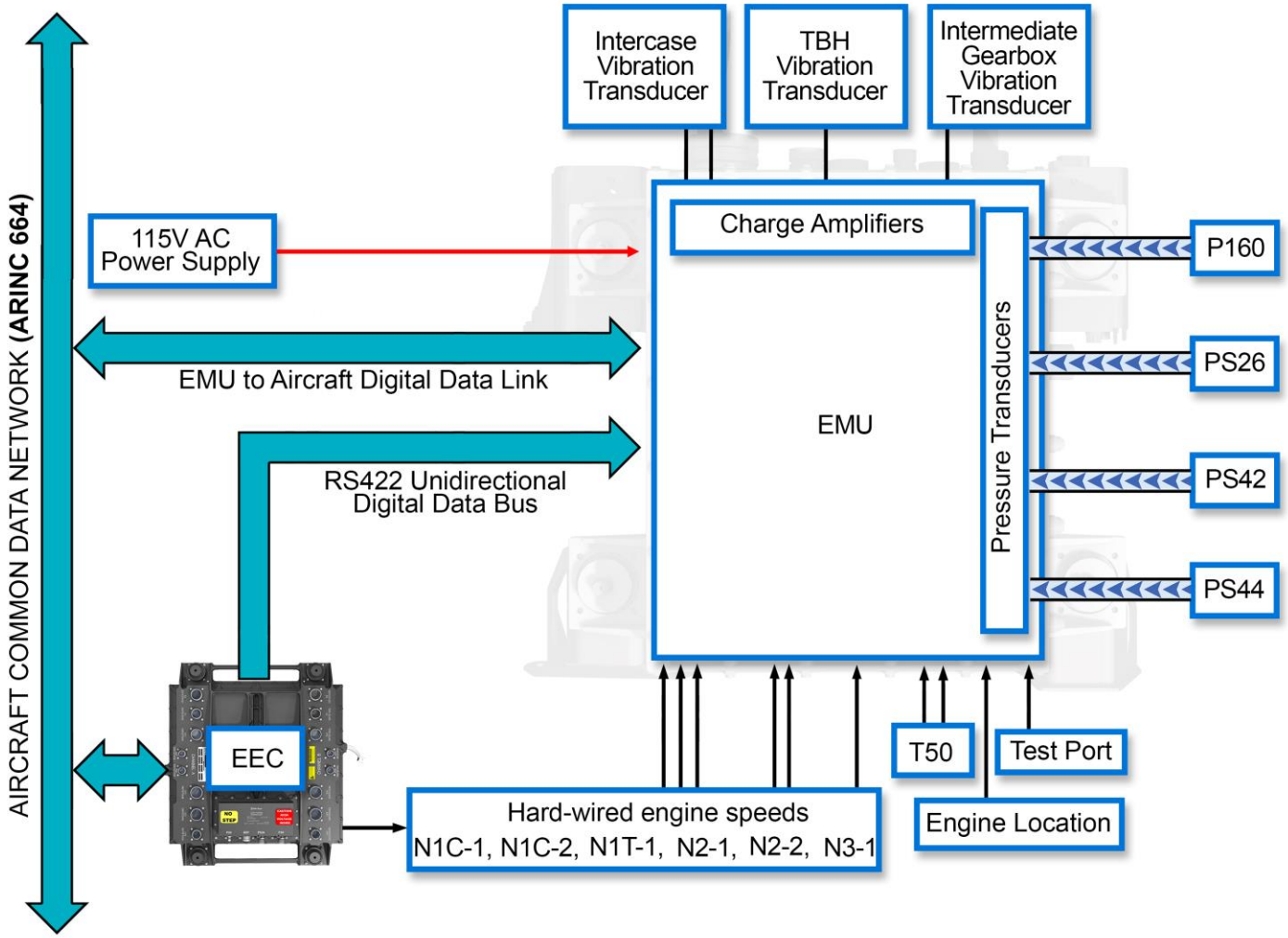

T1000 TEN_LBM_M05_093_01P

ENGINE MONITORING SYSTEM

© Rolls-Royce plc 2018. Use or disclosure is subject to the legend on the Notice to Holder page

EEC Maintenance

EEC Maintenance Switch

The following is a brief description of these tasks. Refer to the AMM for the full description and the relevant OMSD for the correct use of any specialised tooling.

AMM TASK B787-A-R73-21-11-03A-950A-A

Introduction

In order to power the EEC for conditions other than for starting or ground tests then an alternative source of ground power is needed. This is provided by a “soft switch” that is available through the flight deck Multi Function Display (MFD).

Purpose

The EEC Ground Test soft switch is designed for EEC testing and operating without starting the engine.

EEC power is normally provided from the aircraft 115V AC via the RUN / CUTOFF switches. Once the engine is running then the normal power supply for the EEC is from the PMA.

Operation

Using the MFD and accessing the Maintenance Control Pages, on the second row of the available options is the soft switches dedicated to the EMU and EEC.

Selecting the TEST soft switch on the screen then provides an alternate power supply to the EEC (and the EMU) for testing and ground maintenance. It is recommended that once power is applied using this method, that you wait at least 10 seconds before proceeding with your task (this permits the EEC to fully power up and perform its power-up self checks).

Having completed your work return the EEC Maint Test soft switch to the NORM position. Failure to do this will result in a, Status warning being displayed.

© Rolls-Royce plc 2018. Use or disclosure is subject to the legend on the Notice to Holder page

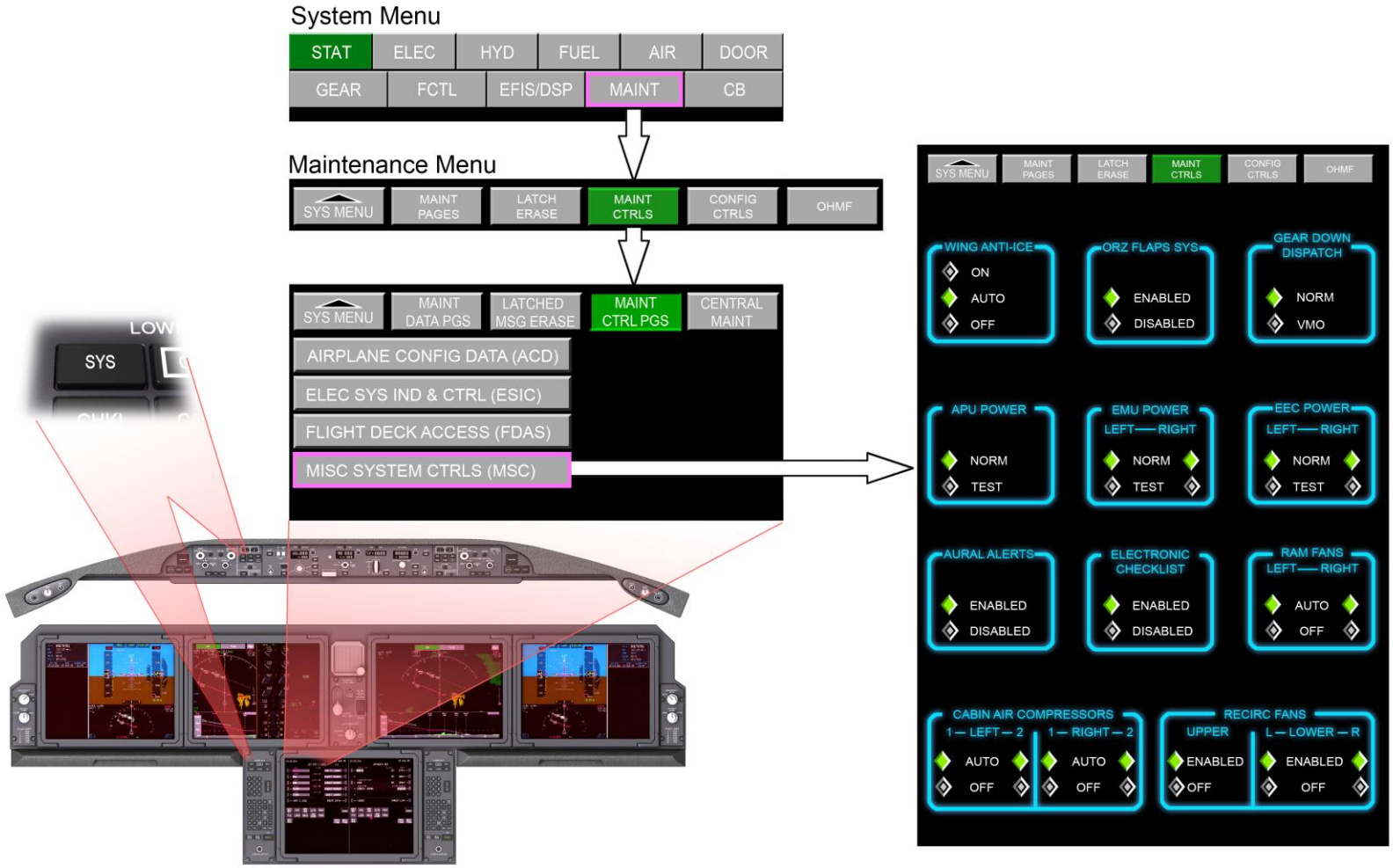

T1000 TEN_LBM_M05_094_01P

EEC MAINTENANCE SWITCH

© Rolls-Royce plc 2018. Use or disclosure is subject to the legend on the Notice to Holder page

EEC Maintenance

EEC Software Loading

The following is a brief description of these tasks. Refer to the AMM for the full description and the relevant OMSD for the correct use of any specialised tooling.

AMM TASK B787-A-R73-21-11-01A-750A-A

Introduction

In order for the EEC software to be efficiently updated with minimal disturbance to operations, the method of downloading the software is integrated into the aircraft systems.

Description

The 787 Software Loading function enables the EEC to be loaded with new software without the need to remove it from the engine or raise the nacelle cowlings. One person, using the Maintenance Laptop, can perform the whole programming operation. The design is for the loading time to the EEC to be no greater than 15 minutes.

On the 787, loadable EEC software updates, known as a Loadable Software Airplane Part (LSAP), are transferred to the aircrafts' File Server Module (FSM) in two steps as follows:

1. Data Distribution – The transfer of data between the ground and the FSM.
2. Data Load – The installation of data to the Airplane System from the FSM i.e. from the FSM to the EEC.

Both steps are carried out by using the Maintenance Laptop to interact with the Maintenance Control Display Function (MCDF) when the aircraft is on the ground.

No media (discs, etc) are used during the update process. The software is provided and transferred to the aircraft via ground based or wireless transmissions. Verifiable attached digital signatures ensure the security of the software.

All Suppliers and Airlines will be provided with the software to package and un-package the software. The aircraft will also have the required software to receive, store and un-package the software parts ready for loading.

On-Board Data Load Function (ODLF)

For software loading to take place the aircraft must be on the ground with the engine stationary and the Ground Test Switch on the P5 panel set to the "DATA LOAD" position.

With the Maintenance Laptop connected to the aircraft, either by cable or a wireless connection, the Maintenance Control Display Function (MCDF) should be selected.

From the Airplane Functions Menu, select the ODLF option to show a list of LRUs to which the software can be loaded together with any part numbers.

Having selected the LRU (in this case, Left or Right Engine EEC), all associated software already stored onboard the aircraft is then shown and selected as required.

The operator then selects START. At this point the EEC checks that the software is compatible and will then indicate any incompatibilities between the current EEC software and the new software. If the software is compatible, then the software load begins and a progress indicator is shown on screen. When the loading process is complete the result will be indicated and the EEC can be restarted (rebooted), to enable the software to be fully loaded.

© Rolls-Royce plc 2018. Use or disclosure is subject to the legend on the Notice to Holder page

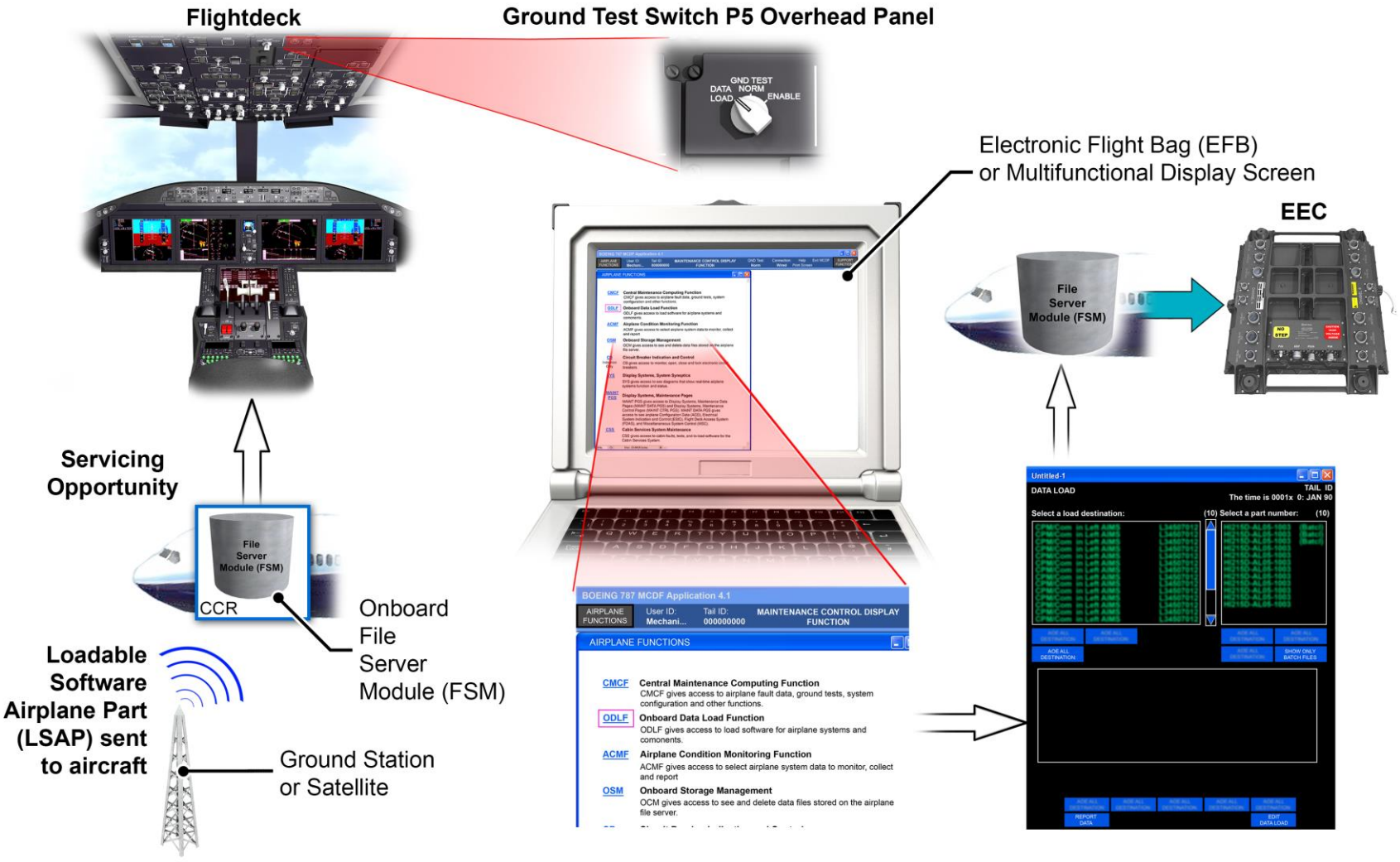

T1000 TEN_LBM_M05_095_01P

EEC SOFTWARE LOADING

© Rolls-Royce plc 2018. Use or disclosure is subject to the legend on the Notice to Holder page

EEC Maintenance

DEP Programmer

The following is a brief description of these tasks. Refer to the AMM for the full description and the relevant OMSD for the correct use of any specialised tooling.

AMM TASK B787-A-R73-21-12-00A-752A-A

Introduction

The Trent 1000 Data Entry Plug (DEP) Programmer is a portable, self-contained unit used for programming and analysing of Trent 1000 Data Entry Plug. All components necessary for operation have been housed in a rugged transport case with the capability of producing a hard copy via an integral printer.

The Programmer comprises of two main components referred to as the “Handheld Unit” (UT1972) and the “DEP Programmer Interface” (UT1874). These components are interconnected using an “Interface Cable” (UT1974). The unit is supplied in a storage case (UT1975) with a battery charging cradle, an AC mains adapter, two spare paper rolls and a User Manual.

Battery

The Handheld Unit is powered from a Lithium Ion rechargeable battery pack to provide up to 10 hours continuous use (the battery should be in its disconnected stowage position during prolonged storage periods). The unit should be fully charged before use (this may take up to 8 hours), alternatively the unit may be powered externally using the charging cradle and mains adapter.

Connecting the Interface Cable

Connect the Interface Cable (UT1974) by locating the small interface cable connector with the red dot facing the top and aligned centrally between the connector and socket.

Applying Power

If the display on the Handheld Unit is not visible, press and release one of the Soft Trigger Buttons on either side of the unit and the Start Screen will appear on the display within a few seconds.

If the Handheld Unit is left ON but is not actively communicating with the Trent 1000 DEP Programmer Interface, it will power down automatically after approximately five minutes.

Software

DEP programmer software will be supplied on a smartcard (UT2017) as the programming specification changes. To install the new software, complete the following:

- Place the unit into a suspended condition by pressing the Suspend button on the Start Screen.
- Ensure the Interface Cable is not connected.
- Remove the Bottom End Cap by using a flat blade screwdriver to rotate the fasteners ¼ turn.
- Press the Eject Button (just above the Reset switch) to remove the smart card from the memory slot.
- Install the new smart card making sure that the orientation is correct.
- Carefully press and release the Reset Switch, using a small screwdriver after twenty seconds the Start Screen will again be displayed.
- View software page to ensure the new software version matches that on the new software card.

© Rolls-Royce plc 2018. Use or disclosure is subject to the legend on the Notice to Holder page

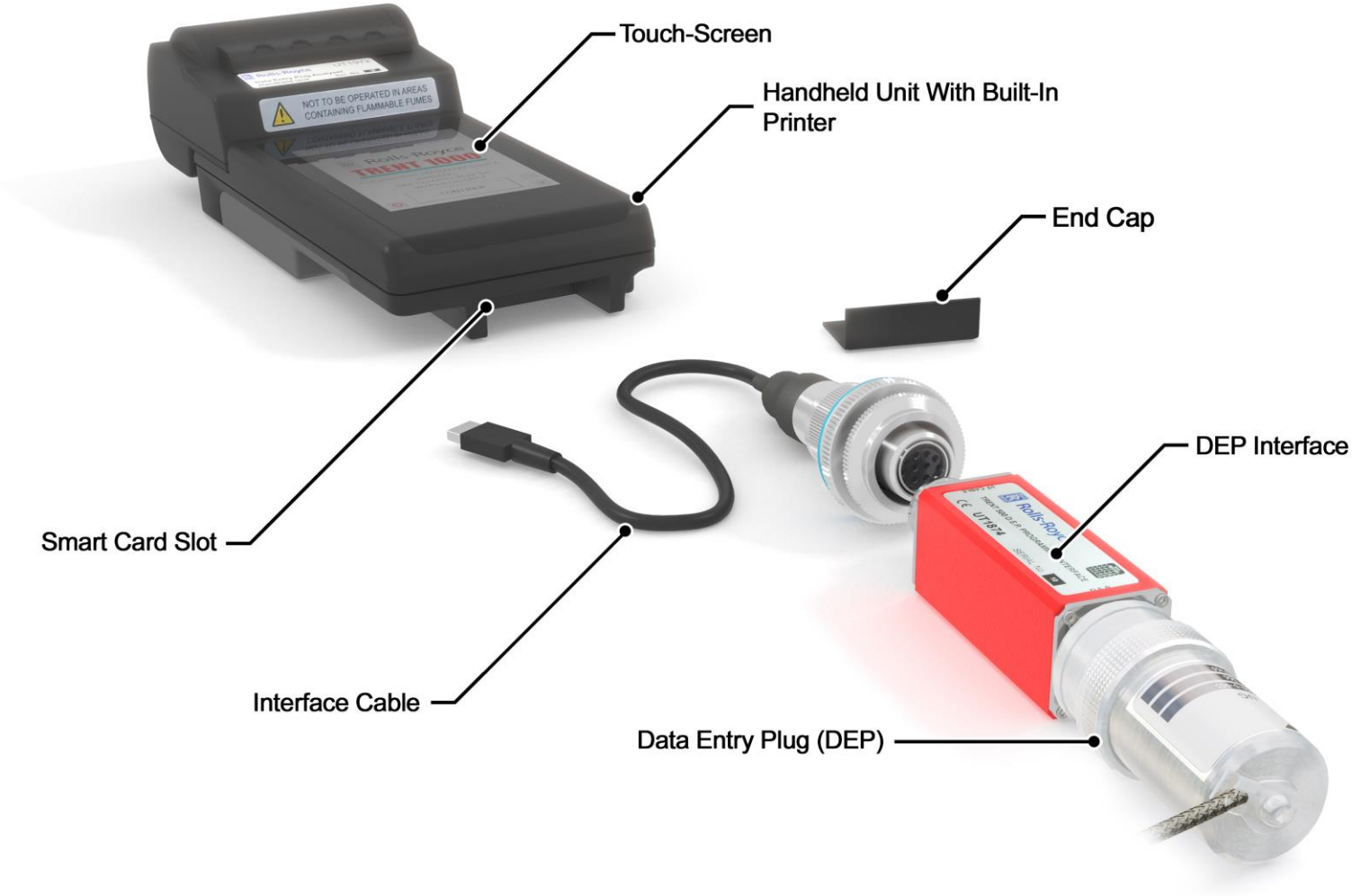

T1000 TEN_LBM_M05_096_01P

DEP PROGRAMMER

© Rolls-Royce plc 2018. Use or disclosure is subject to the legend on the Notice to Holder page

EEC Maintenance

DEP Programming

Operation

The DEP should only be programmed or re-programmed when:

- The DEP is new to the engine.
- There has been a change of engine rating.
- The trim values have changed post overhaul.

The Unit has a touch sensitive screen so when using the Trent 1000 DEP Programmer, the operator will be required to touch, press gently or tap active areas of the screen, using a finger or the dedicated touch screen stylus supplied.

Before using the Trent 1000 DEP Programmer the operator is advised to check that the Programmer is fitted with the correct version of software. The software version is visible on any printout produced by the Handheld Unit and is also displayed by tapping on the Title area at the top of the start screen. Check the displayed software UT number against that required by the Aircraft Maintenance Manual (AMM). Press the Close button after viewing of the Software version information.

Performing DEP Analysis

Note: Always refer to the AMM for further detailed information.

To perform DEP Analysis / Programming the following actions are required:

- Check that the correct software version is installed.
- Adjust the contrast and brightness of the Handheld Unit display, if required.
- Adjust the Date and Time setting of the Handheld Unit, if required.
- Complete the DEP Interface startup Self Test.
- Connect a Trent 1000 DEP.
- Enter the DEP Serial Number (using Data Entry Keypad).
- Select from options to erase the DEP. Edit DEP Contents, and, Print the DEP Contents or Remove the DEP.

© Rolls-Royce plc 2018. Use or disclosure is subject to the legend on the Notice to Holder page

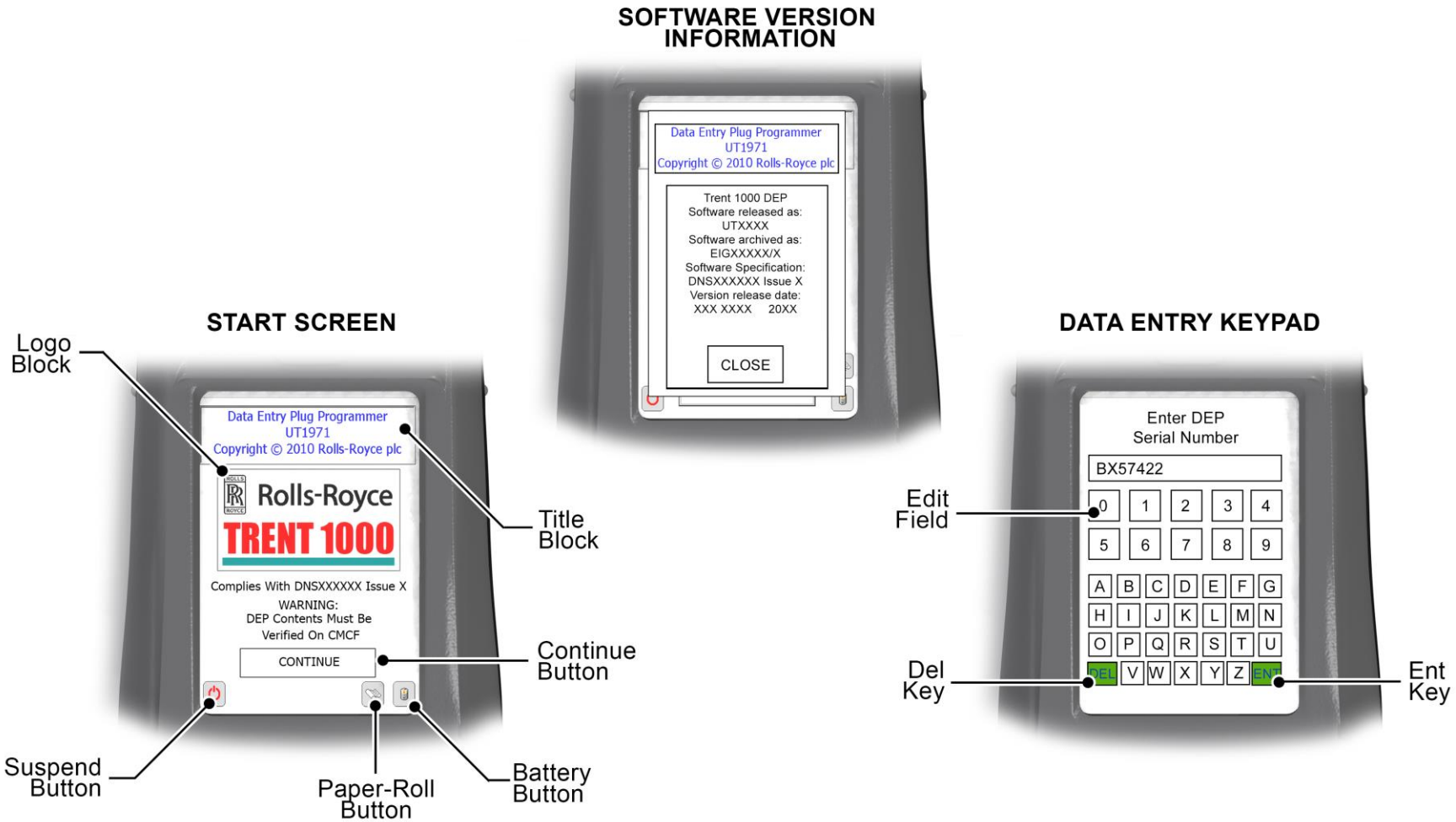

DEP PROGRAMMING

© Rolls-Royce plc 2018. Use or disclosure is subject to the legend on the Notice to Holder page

On Board Maintenance – Ground or Initiated Tests

Introduction

The Initiated tests provide a means by which the maintenance personnel can conduct Engine related tests in a safe and controlled manner. The tests are called up to be carried out as and when directed by the relevant AMM of FIM procedure.

Test Structure

The Central Maintenance Computing Function (CMCF) will generate screens to guide the operator though in the following test steps:

- Test Set-Up (indicate to the operator any necessary warnings, switch selections and instructions required to carry out the test in a safe manor).
- Test In-Progress (Indicates that the test is currently being carried out (operating) – a STOP TEST option is available if required at this point).
- Test Close-Up (switch selections and instructions required to return the system to its original condition).
- Fault Reporting (indicates Passed or Failed condition).

Below is an indication of the EEC System test (AMM Task B787-A-R71-00-00-39B-300B-A) and Electrical Harness test (AMM Task B787-A-R71-00-00-38B-300B-A) together with an explanation of the test capabilities.

Note: See the Troubleshooting section for more details on access and conducting Ground Tests.

© Rolls-Royce plc 2018. Use or disclosure is subject to the legend on the Notice to Holder page

Test Name
EEC SYSTEM TEST CHANNEL A
EEC SYSTEM TEST CHANNEL B
ESS ANTI-ICE SYSTEM
FUEL METERING VALVE SYSTEM CHANNEL A
FUEL METERING VALVE SYSTEM CHANNEL B
FUEL RETURN TO TANK VALVE
HANDLING BLEED VALVE SYSTEMS CHANNEL A
HARNESS CHANNEL A
HARNESS CHANNEL B
IGNITION SYSTEM CHANNEL A
IGNITION SYSTEM CHANNEL B
MODULATED AIR SYSTEM
P20/T20 PROBE HEATER
OIL BYPASS VALVE SYSTEM CHANNEL A
OIL BYPASS VALVE SYSTEM CHANNEL B
OIL DEBRIS MONITORING SYSTEM RESET CHANNEL A
OIL DEBRIS MONITORING SYSTEM RESET CHANNEL B
SECONDARY AIR SYSTEM
TURBINE CASE COOLING ACTUATION SYSTEM
THRUST REVERSER INTERLOCK SOLENOID
VFSG THERMAL BYPASS VALVE
VARIABLE STATOR VANE SYSTEM CHANNEL A
VARIABLE STATOR VANE SYSTEM CHANNEL B
VFSG AOHE AIR CONTROL VALVE SYSTEM CHANNEL A
VFSG AOHE AIR CONTROL VALVE SYSTEM CHANNEL B

The EECS System Test provides a comprehensive static testing of the EEC and FADEC system. During the test the EEC carries out tests of its drive circuits followed by approximately 30 seconds of EEC function checking.

The EECS Harness Test provides comprehensive static testing of input and output circuits to the EEC. While this is being conducted it is possible for the operator to inspect the harness to try and replicate any intermittent faults.

T1000 TEN_LBM_M05_098_01P

© Rolls-Royce plc 2018. Use or disclosure is subject to the legend on the Notice to Holder page

Flight Deck Effects

Introduction

Below is an indication of the associated Flight Deck Effect (FDE) massages for this section (EECS) together with the message type (level), an explanation of its meaning, dispatch restrictions (if any) and expected actions taken by flight or ground crew.

Note: This is for your guidance only. Due to the nature of the aircraft and engine continual development these may change and Rolls-Royce cannot guarantee that they are still current and fully accurate. As such, always refer to the appropriate AMM procedure for reference.

© Rolls-Royce plc 2018. Use or disclosure is subject to the legend on the Notice to Holder page

Message	Type	Dispatch	Meaning
ENG CONTROL L (R)	Advisory	Do Not Dispatch	When on the ground and the airspeed is less than 80 knots the EEC is in a 'No Dispatch' configuration. The EEC is operating with a limited set of engine control parameters and may not be able to control all aspects of the engine.
ENG EEC MODE L (R)	Advisory	Time Limited Dispatch	The EEC is in the alternate control mode either by a control system failure or manually selected by the flight crew.
ENG CONTROL L (R)	Status	Do Not Dispatch	The EEC is in a 'No Dispatch' configuration. The EEC is operating with a limited set of engine control parameters and may not be able to control all aspects of the engine.
ENG EEC C1 L (R)	Status	Time Limited Dispatch	The EEC is operating with reduced redundancy or data is not available between one channel of the EEC and EICAS.
ENG EEC MODE L (R)	Status	Time Limited Dispatch	The EEC is in the alternate mode of control due to loss of valid air data inputs or faults to the TPR derivation function.
ENG EEC OVHT L (R)	Status	Do Not Dispatch	The EEC internal temperature has exceeded the operating limit.
ENG OVSPD PROT SYS L (R)	Status	Do Not Dispatch	The EEC has lost its overspeed protection function.
ENG TCMA L (R)	Status	Time Limited Dispatch	The EEC has lost its Thrust Control Malfunction Accommodation function.
ENG TURB OVSPD SYS L (R)		Time Limited Dispatch	The EEC has lost its Turbine Overspeed Protection function either by faulty speed signals, EEC internal faults or engine fuel valve faults.

T1000 TEN_LBM_M05_099_01P

© Rolls-Royce plc 2018. Use or disclosure is subject to the legend on the Notice to Holder page

EEC Reference Wiring Diagrams

Introduction

Below is a wiring schematic of the associated units connected to the EEC. This is only a representation of the actual connectors but all plugs and connectors are indicated with the reference identifiers. This should be used for reference only and not be used as a definitive document. For a more detailed explanation (pins and sockets for troubleshooting purposes etc) and for further details, then always refer to the actual wiring diagrams as given within the AMM or FIM electronic documentation.

© Rolls-Royce plc 2018. Use or disclosure is subject to the legend on the Notice to Holder page

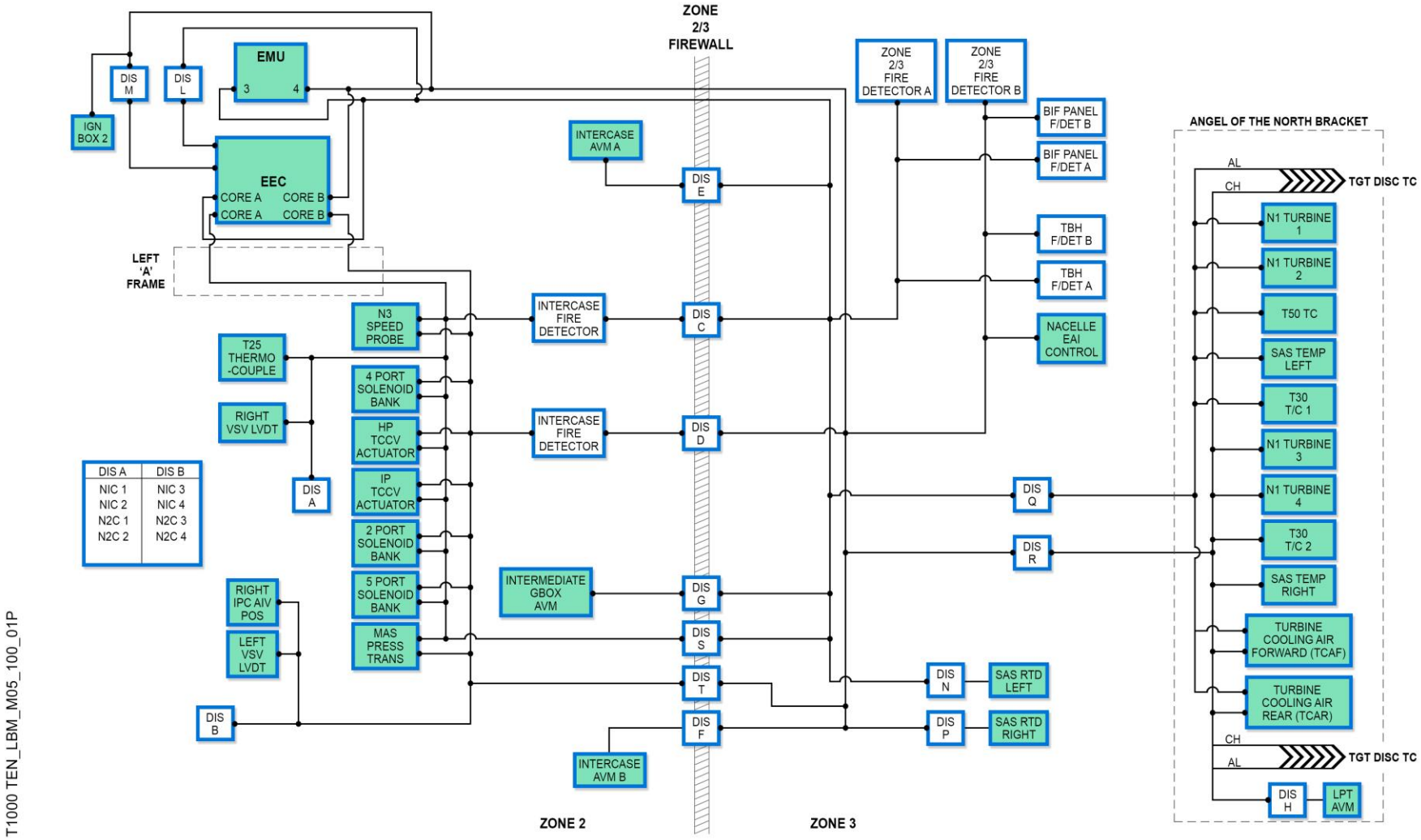

EECS WIRING DIAGRAM

© Rolls-Royce plc 2018. Use or disclosure is subject to the legend on the Notice to Holder page

EEC Reference Wiring Diagrams

Introduction

Below is a wiring schematic of the associated units connected to the EEC. This is only a representation of the actual connectors but all plugs and connectors are indicated with the reference identifiers. This should be used for reference only and not be used as a definitive document. For a more detailed explanation (pins and sockets for troubleshooting purposes etc) and for further details, then always refer to the actual wiring diagrams as given within the AMM or FIM electronic documentation.

© Rolls-Royce plc 2018. Use or disclosure is subject to the legend on the Notice to Holder page

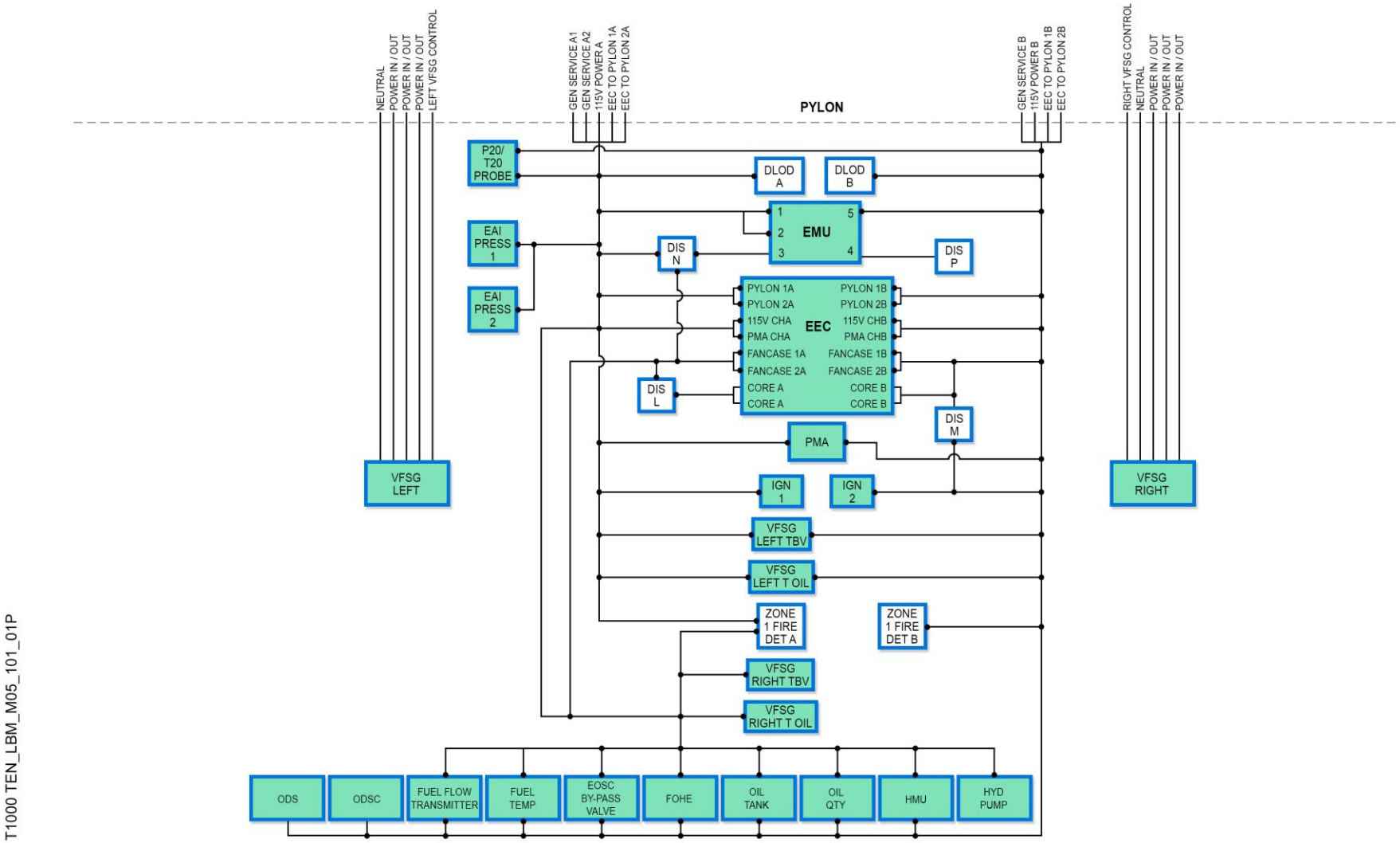

EECS WIRING DIAGRAM

© Rolls-Royce plc 2018. Use or disclosure is subject to the legend on the Notice to Holder page

END OF SECTION

Section 6 – Engine Indicating

ATA Chapter Covered:

77

© Rolls-Royce plc 2018. Use or disclosure is subject to the legend on the Notice to Holder page

Flight Deck Displays

Introduction

There are 5 full colour liquid crystal Display Units (DU) located on the flight deck. They are:

- Left & Right Outboard DU – Primary Flight Display (PFD).
- Left & Right Inboard DU – Combined Navigation Display (ND) and EICAS Display.
- Lower Centre DU – Multi-Functional Display (MFD).

Together they form the Head Down Display. There are also two Head Up Display (HUD) Combiners that project navigation information onto screens in the glareshield.

Left & Right Inboard Display Units

Both Left & Right Inboard DUs show the Engine Indicating & Crew Alerting System (EICAS) display on the inboard half of each screen. Each Inboard DU can also display the Multi-Functional Display (MFD) format if required.

If an inboard DU failure is detected the display will automatically switch to the other DU. The EICAS display shows primary engine parameters and other parameters that require display for flight safety. This information may also be seen on the PFD if both DU's fail.

Multi-Functional Display (MFD)

The lower centre DU is normally configured as the MFD. The flight crew can select one or both Inboard DUs to display the MFD format using either of the two Display Select Panels located on the glare shield. The MFD is only available on the ground as it is used primarily for determining dispatchability and maintenance procedures.

Display Select Panel/Multi-Function Keypad

There are two Display Select Panels (DSP) located on the anti-glare shield and two Multi-Function Keypads (MFK) either side of the MFD. Each have six buttons grouped together, which on their selection take you to the following display on the MFD:

- CHKL – Check lists menu (Flight Crew Procedures)
- COMMS – Communication menu (text and e-mails)
- INFO – Information menu (Airport Databases)
- CDU – Control Display Unit menu
- ND – Navigation Display menu
- SYS – Systems menu

Each MFK also has a cursor control selector and switch to navigate around each screen and select options from each menu (this can also be done using the cursor control device - not shown). The most common selection for maintenance purposes would be the SYS button, as this will direct you to System Synoptic, Status (STAT) and Maintenance (MAINT) pages for system conditions and maintenance activities.

Warning & Caution Indicator Lights

Master warning and caution lights switches are located below the anti-glare shield directly in front of the crew seats.

© Rolls-Royce plc 2018. Use or disclosure is subject to the legend on the Notice to Holder page

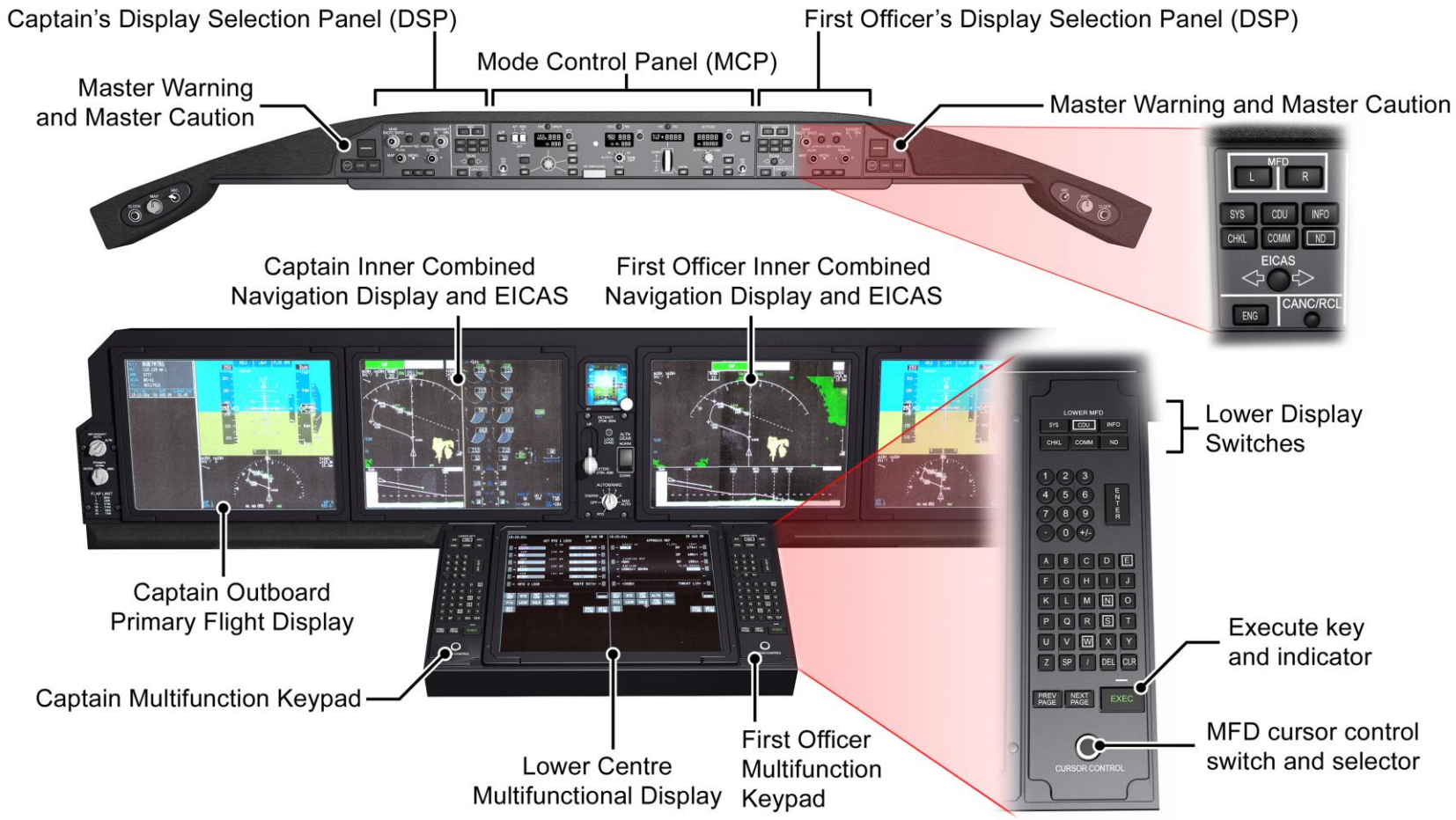

T1000 TEN_LBM_M06_103_01P

FLIGHT DECK DISPLAYS

© Rolls-Royce plc 2018. Use or disclosure is subject to the legend on the Notice to Holder page

Status Pages

Introduction

A STATUS cue shows on the EICAS display below the memo messages to indicate that a status message has occurred when the status page is not being viewed.

The status page shows data that helps the technician make a decision on the dispatch status of the airplane. One status page can be shown on the Captain's side and an independent status page on the First Officer's side. For status page control on the ground, then use the system (SYS) button on the DSP or a Multi-Function Keypad (MFK) to show the Status Page.

Use the Cursor Control Selector on the MFK or the Cursor Control Device (CCD) to move the cursor on the display. When the cursor is in the correct position, make a selection using any of the following:

- MFK Cursor select switch.
- MFK ENTER key.
- One of the cursor select switches on the side of the CCD.

Status Page Indications

These are the following indications and controls that will show on the status page:

- Menu bar.
- Hydraulic data.
- APU data.
- Crew oxygen data.
- Liquid cooling data.
- Status message field.
- Status message field controls and indications.

Status Page Overview

A status message relates to requirements in the Master Minimum Equipment List (MMEL). It is normally required that you clear status messages or defer the fault condition before dispatching the aircraft. There are two types of status messages, Latched and Non-Latched.

While non-latched status messages are shown for some malfunctions, they then disappear when the condition is no longer present or gone away. Latched status messages let the technician look at messages that occur in specific flight phases but must be erased after investigation.

Status Messages Indications

The status message field displays up to 14 messages. If there are more than 14 messages, then a NEXT PAGE key shows at the bottom of the display together with a page number. The NEXT PAGE key lets you look at the following pages in order.

Latched Status Message Control

There are two ways to erase a latched status message. For some messages, you must complete a Ground/Initiator Test after you repair the system. For other messages, you must go to the LATCHED MSG ERASE page to erase and clear the message. This can be found on the Maintenance Menu option via the System Menu.

© Rolls-Royce plc 2018. Use or disclosure is subject to the legend on the Notice to Holder page

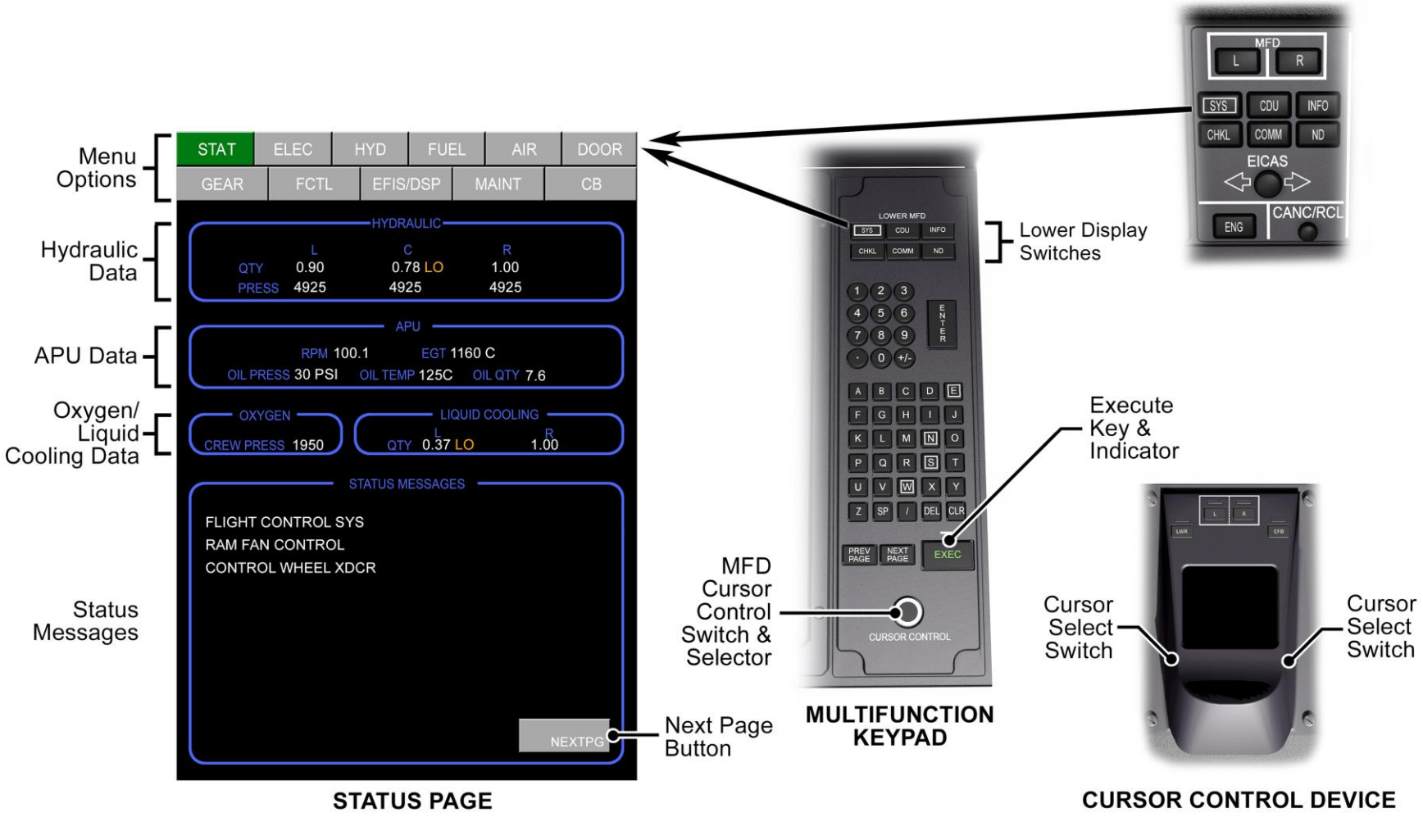

STATUS PAGES

© Rolls-Royce plc 2018. Use or disclosure is subject to the legend on the Notice to Holder page

Maintenance Pages

Introduction

In order to access the maintenance pages, you need to gain access via the Status Page menu bar options. The menu bar on the synoptic gives you access to the other synoptic pages or the status page. Maintenance pages show data that helps you troubleshoot and repair aircraft systems. The data shows in real time or as a snapshot (manual event or auto event). Auto snapshots occur automatically when a system has exceeded established parameters. You can print or downlink the maintenance pages to ground stations.

Status Page Menu Bar

The menu bar lets you select either synoptic pages or the function pages for these systems:

- ELEC - Electrical.
- HYD - Hydraulic.
- FUEL.
- AIR.
- DOORS.
- GEAR - Landing gear.
- FCTL - Flight controls.
- EFIS/DSP - Alternate EFIS/DSP display.
- MAINT - Maintenance functions.
- CB - Electronic circuit breaker (CBIC) access.

Maintenance Page Controls

Using the MFK cursor control selector or a CCD to navigate and select the MAINT key. You then select the MAINT DATA PGS key and this shows the first page of three maintenance page menus in ATA sequence. The Maintenance Page Menu now shows below the MAINT menu and selecting the DISPLAY SELECTION menu gives you access to real time information, manual or auto snapshots of data. Under an auto snapshot, any exceedance(s) data will be recorded and available for viewing.

The following engine related selections are available from page three of the Maintenance Page Menu:

- Performance.
- Electronic Propulsion Control System (ECPS).
- Engine Monitoring Unit (EMU).
- Left Engine Exceedance.
- Right Engine Exceedance.

The options to selections available for each are:

- DISPLAY - shows a single snapshot in memory.
- SHOW LIST - shows if there is more than 1 snapshot in memory.

A blank area adjacent to a selection shows if there are no snapshots available for viewing. The ERASE ALL selection at the bottom erases all the auto and manual snapshots.

© Rolls-Royce plc 2018. Use or disclosure is subject to the legend on the Notice to Holder page

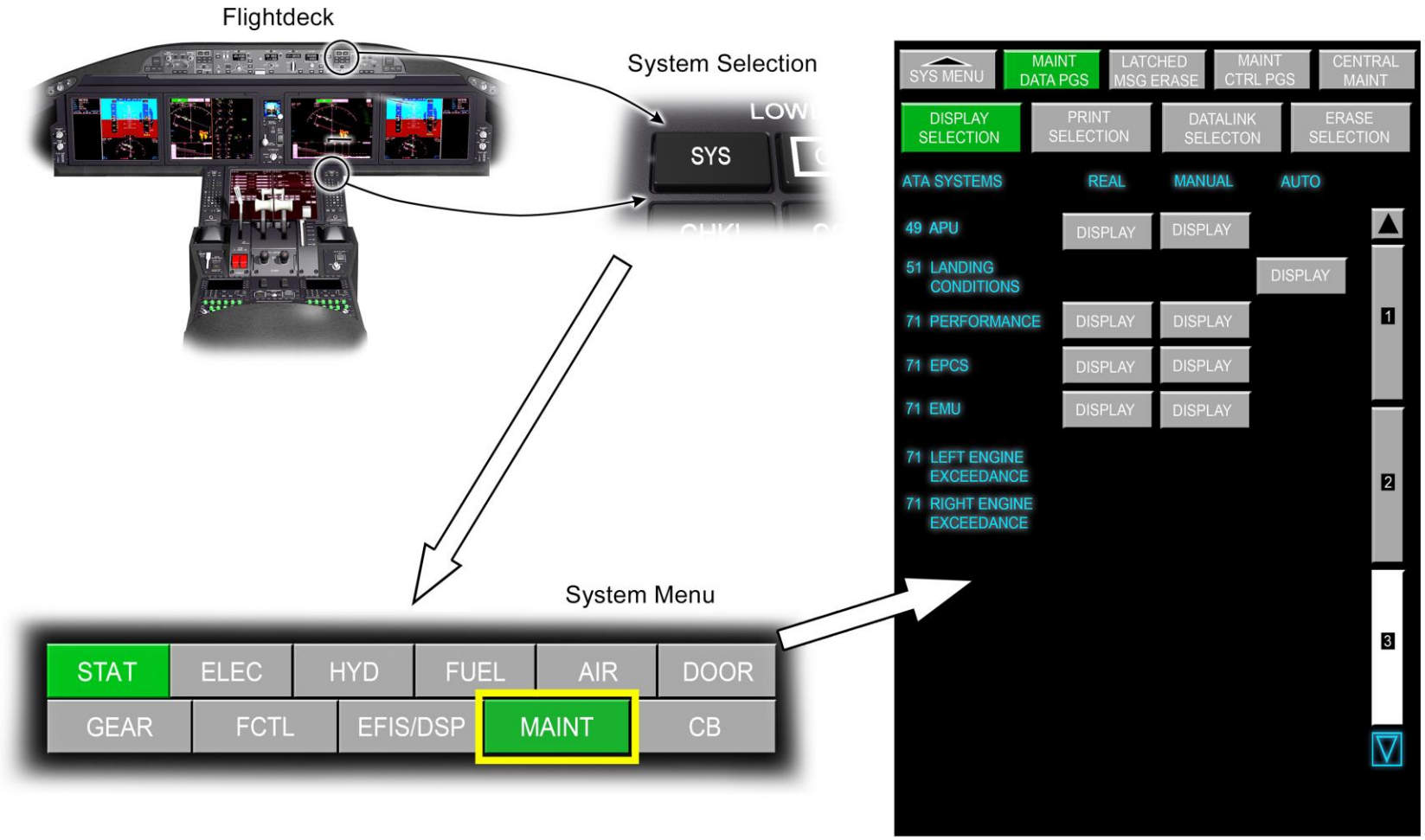

T1000 TEN_LBM_M06_105_01P

MAINTENANCE PAGES

© Rolls-Royce plc 2018. Use or disclosure is subject to the legend on the Notice to Holder page

Maintenance Pages

Engine Exceedance Maintenance Pages

There are two separate ENGINE EXCEEDANCE maintenance pages, one for each engine. They are available in the auto event display mode only. The title shows:

- LEFT ENGINE EXCEEDANCE
- RIGHT ENGINE EXCEEDANCE

Introduction

The exceedance pages automatically records any engine exceedances and provides the engineer with a method of viewing them.

Description

A total of eight exceedances can be seen on one page, the recording of which is inhibited below 1000ft. Each exceedance shows the following information:

- Date of exceedance.
- Time of exceedance event.
- Type of exceedance.
- Parameter Red and Amber limit thresholds.
- Time above the Red and / or Amber limit thresholds.

© Rolls-Royce plc 2018. Use or disclosure is subject to the legend on the Notice to Holder page

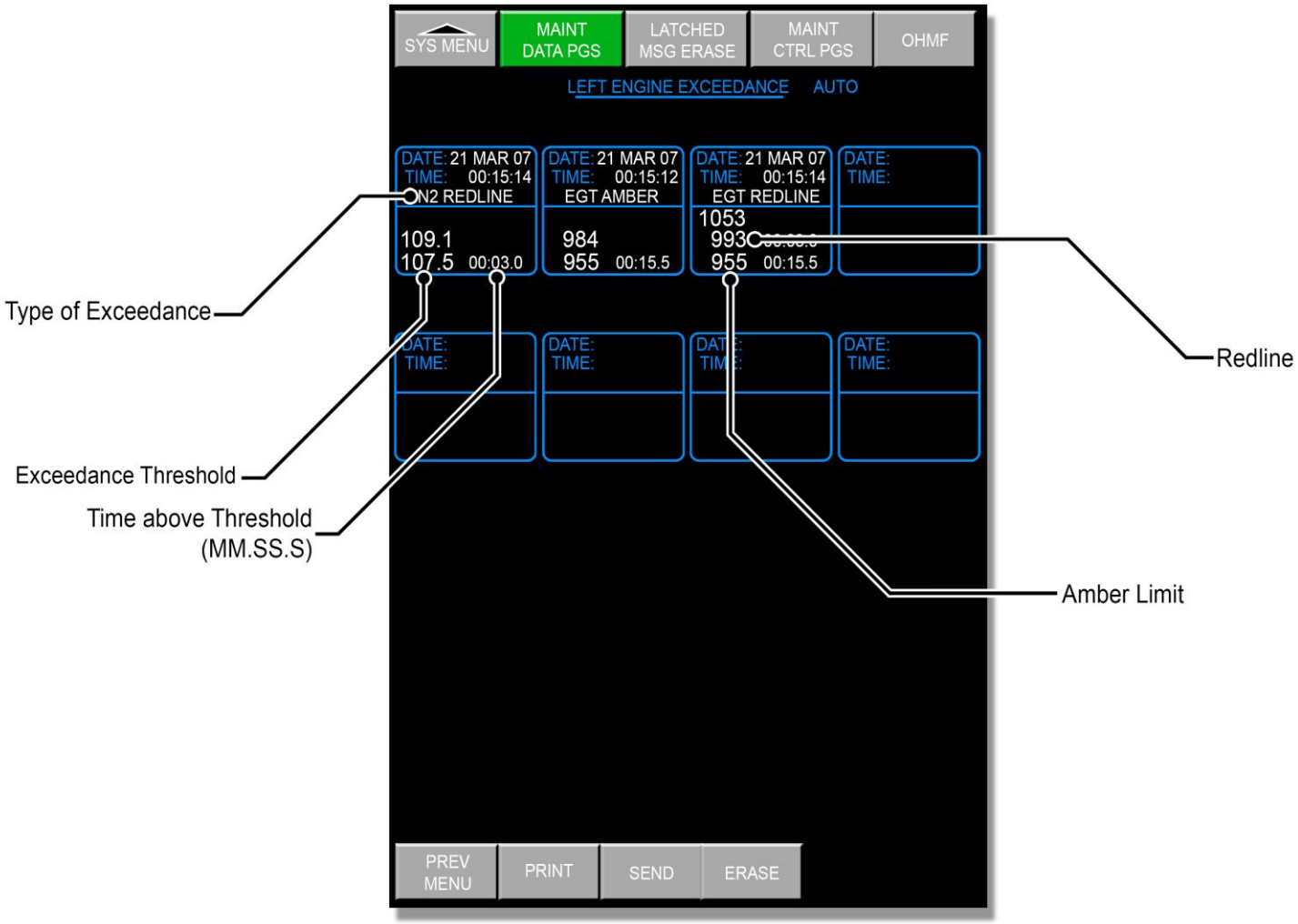

T1000 TEN_LBM_M06_106_01P

ENGINE EXCEEDANCE MAINTENANCE PAGE

© Rolls-Royce plc 2018. Use or disclosure is subject to the legend on the Notice to Holder page

Flight Deck – EICAS Primary Engine Parameters.

The EICAS displays the primary and secondary engine parameters when the input is valid.

Primary Engine Parameters

The primary engine parameters are as follows:

- Turbofan Power Ratio (TPR).
- LP shaft speed (N1) %.
- Engine Gas Temperature (EGT) ºC.

The Primary Engine Parameters are displayed in both analogue and digital format. The flight crew may select a Compact Display when both Engines are operating normally. In this view only the Primary Engine Parameters are visible.

When the Compact Display has been selected, the Normal Display (which includes the secondary parameters) will only appear if the Engines are starting, failed or are shutdown, a secondary parameter goes out of normal operating range or it is selected by the flight crew by toggling between each display using the ENG button on the anti-glare DSP.

Whilst the Primary Engine Parameters are in the normal operating range the gauge fill is shown in grey while the digital indication is displayed in WHITE.

If the parameters enter the Caution range then both the gauge fill and the digital readout change to AMBER and then RED if they exceed the red line limit.

If the parameter subsequently reduces below the exceedance value, the gauge returns to a grey fill, however, the outer box of the digital read out remains in the exceedance level colour to indicate the exceedance has taken place i.e. latched.

EEC Mode

The mode of the EEC is selected by a guarded EEC Mode button on the P5 overhead panel. The button has two positions, NORM (Normal) and ALT (Alternate). The EEC is in the Primary Mode NORM is selected and the Alternate mode when ALT is selected.

In the primary mode, the EEC uses TPR Control for thrust setting information and displays TPR on the EICAS screen.

If the EEC can no longer calculate TPR, the EEC will automatically revert to the SOFT ALTERNATE mode of control and the TPR display will be blanked. The flight crew must then select the EEC Mode button to ALTN position for the engine that has lost TPR and also the other engine.

The HARD ALTERNATE mode of control is entered by manual selection of the EEC Mode button on the P5 overhead panel to the ALTN position. The TPR display remains blanked and the engine uses N1 to control thrust. All the gauge control curser prompts also transfer over to the N1 gauge. The flight crew must then select the EEC Mode button to ALTN position for the other engine.

Note:

Both engines **must** either be in TPR or Alternate Mode.

Thrust Reverse Translating Cowl Position

The position of the translation cowl of the Trust Reverser is indicated above the TPR gauge as an amber or green REV indication. With Reverse Thrust selected and the translating cowl below 90% deployed an amber REV will be seen.

When the translating sleeve moves above 90% deployed the REV letters will change to green.

© Rolls-Royce plc 2018. Use or disclosure is subject to the legend on the Notice to Holder page

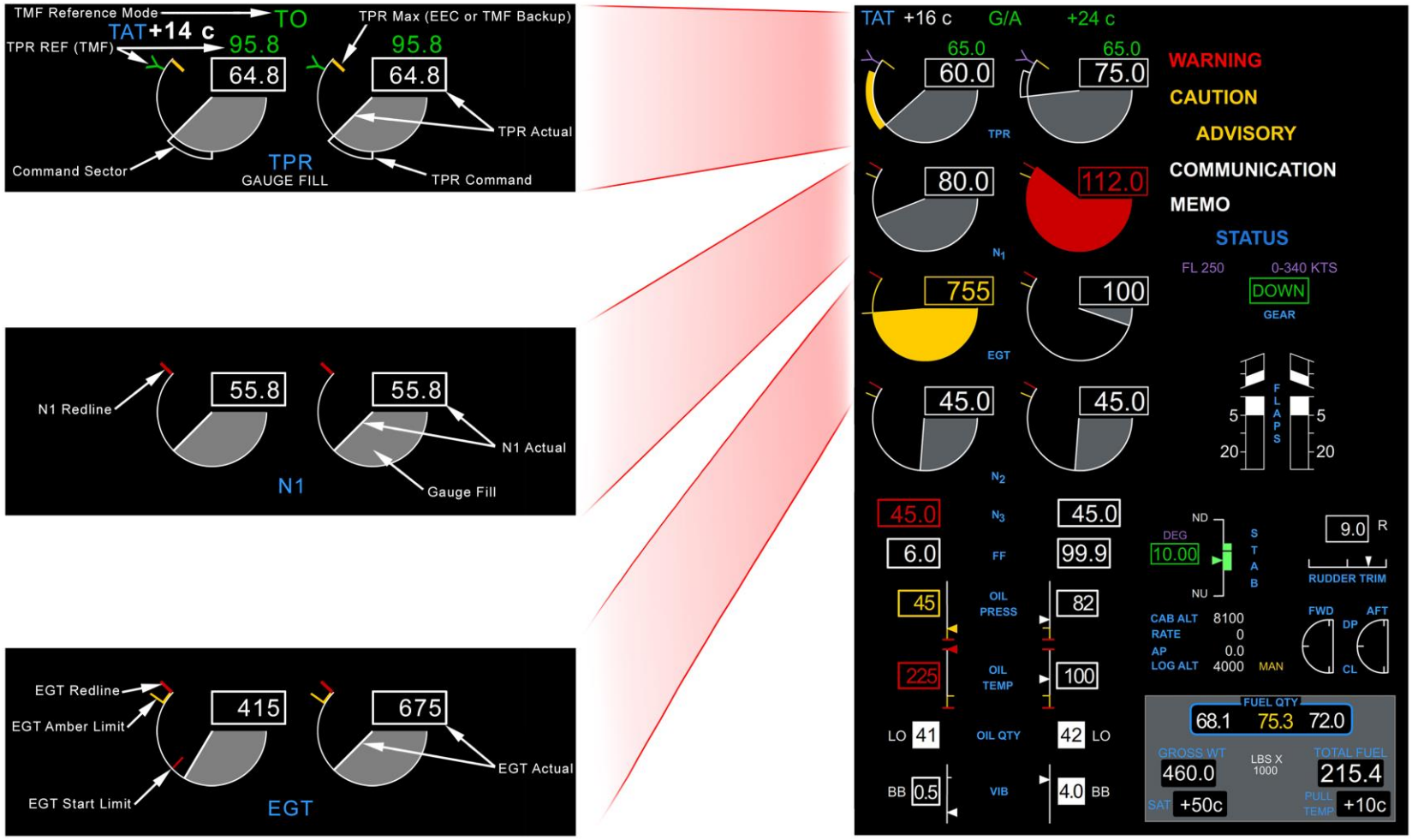

T1000 TEN_LBM_M06_107_01P

FLIGHT DECK DISPLAY – EICAS PRIMARY PARAMETERS

© Rolls-Royce plc 2018. Use or disclosure is subject to the legend on the Notice to Holder page

Flight Deck Display – EICAS Secondary Engine Parameters

The secondary engine parameters are normally blanked but under certain circumstances they are automatically displayed on the EICAS display. The flight crew can display the Secondary Engine parameters on the EICAS display by manually selecting 'ENG' on either DSP. The secondary engine parameters are:

- IP Shaft speed (N2) %.
- HP shaft speed (N3) %.
- Fuel Flow (FF) (lbs/hr).
- Oil Pressure (psi).
- Oil Temperature (ºC).
- Oil Quantity (US quarts or Litres).
- Vibration (A/C Units).

Actual values are displayed in white on black when within the normal operating range. If the parameters exceed the Caution range then the digital readout changes firstly to AMBER, and then to RED if they exceed the red line limit.

If the parameter subsequently reduces below the exceedance value then the gauge will return to normal, however, the outer box of the digital readout remains in the exceedance level colour to indicate the exceedance has taken place i.e. Latched.

The exceptions are the Oil Quantity and Vibration displays which show an inverse video display (black on white) when the values reach their exceedance levels.

Other Parameters shown on EICAS are:

- Total Air Temperature (TAT) ºC
- Assumed Temperature ºC
- Thrust Limit Mode
- Thrust Reverser indication
- Alert Messages
- Engine & Wing Anti-Ice indications
- Communication & Memo Messages
- In-flight start envelope
- Fuel Data
- Pressurisation Indications

© Rolls-Royce plc 2018. Use or disclosure is subject to the legend on the Notice to Holder page

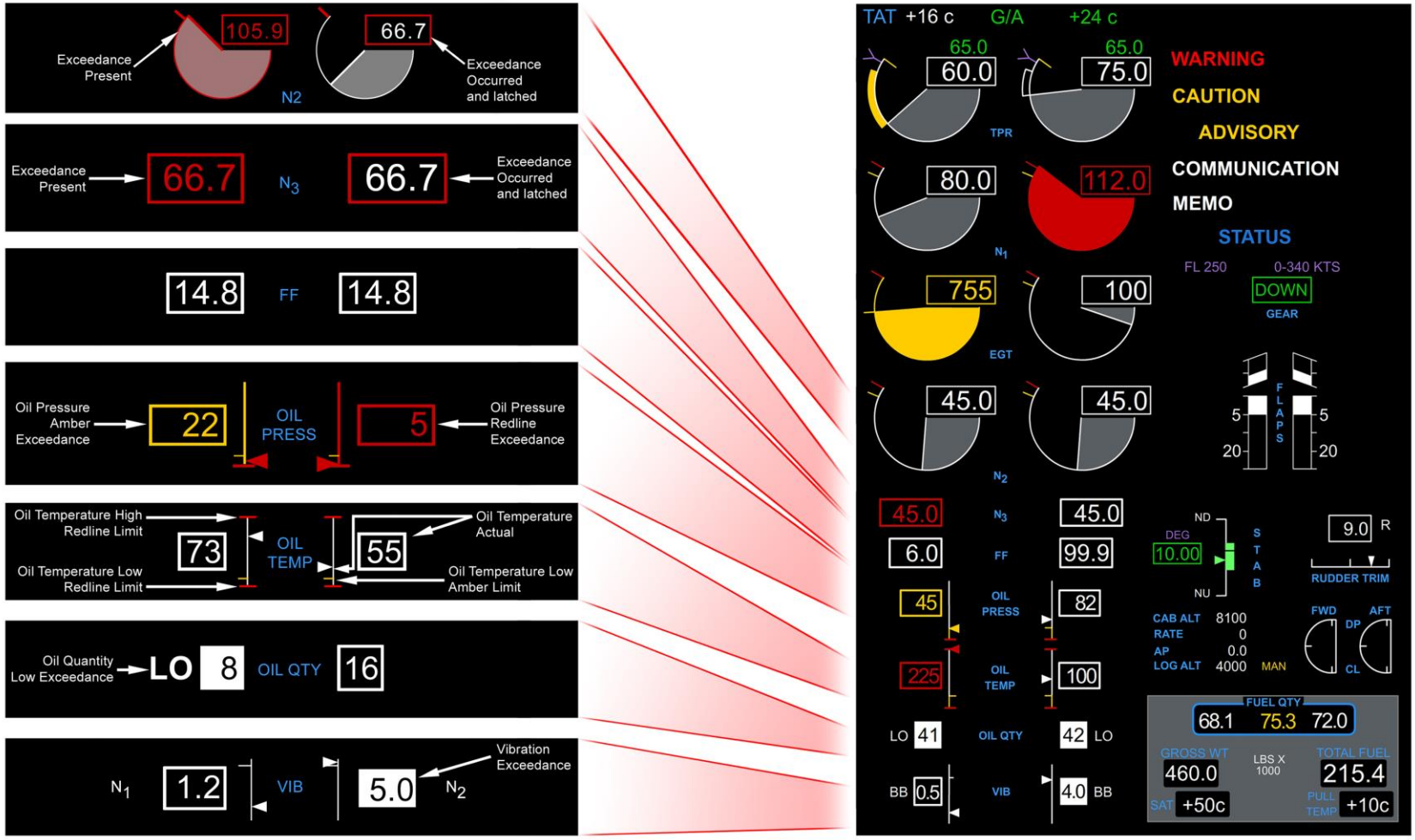

T1000 TEN_LBM_M06_108_01P

FLIGHT DECK – EICAS SECONDARY PARAMETERS

© Rolls-Royce plc 2018. Use or disclosure is subject to the legend on the Notice to Holder page

Engine Instrumentation

Engine parameters are measured at a number of locations, called stations, throughout the engine. The parameters include shaft rotational speed, pressure, temperature and vibration.

Shaft Speeds

Speed probes are used to measure the rotational speed of the three rotating systems

Pressures & Temps

Pressures and temperatures are sensed from a variety of locations inside and outside the engine. Some are used in the engine control functions of the EECS; some are used to provide data to the engine health monitoring system, while others have a role in both systems.

Vibration

The engine vibration system uses three vibration transducers. They provide an indication of the state of balance of the three rotating assemblies to the flight deck and engine health monitoring system. They also provide the data to allow on-wing trim balancing of the LP Compressor and LP Turbine.

Station Identification

Below is a list identifying the stations listed in the graphic below:

- 0 = Ambient air (pressure).
- 20 = Engine Inlet Total Air (pressure and temperature).
- 24 = IP Compressor Inlet (temperature).
- 160 = Fan Outlet Air (pressure).
- 25 = IP Compressor Outlet (static temperature).
- 26 = HP Compressor Inlet (static pressure).
- 30 = HP Compressor Outlet (static pressure and temperature).
- 40 = HP Turbine Inlet (temperature).
- 42 = IP Turbine Inlet (pressure).
- 44 = LP turbine Inlet (pressure and temperature).
- 50 = LP Turbine Outlet (temperature).

© Rolls-Royce plc 2018. Use or disclosure is subject to the legend on the Notice to Holder page

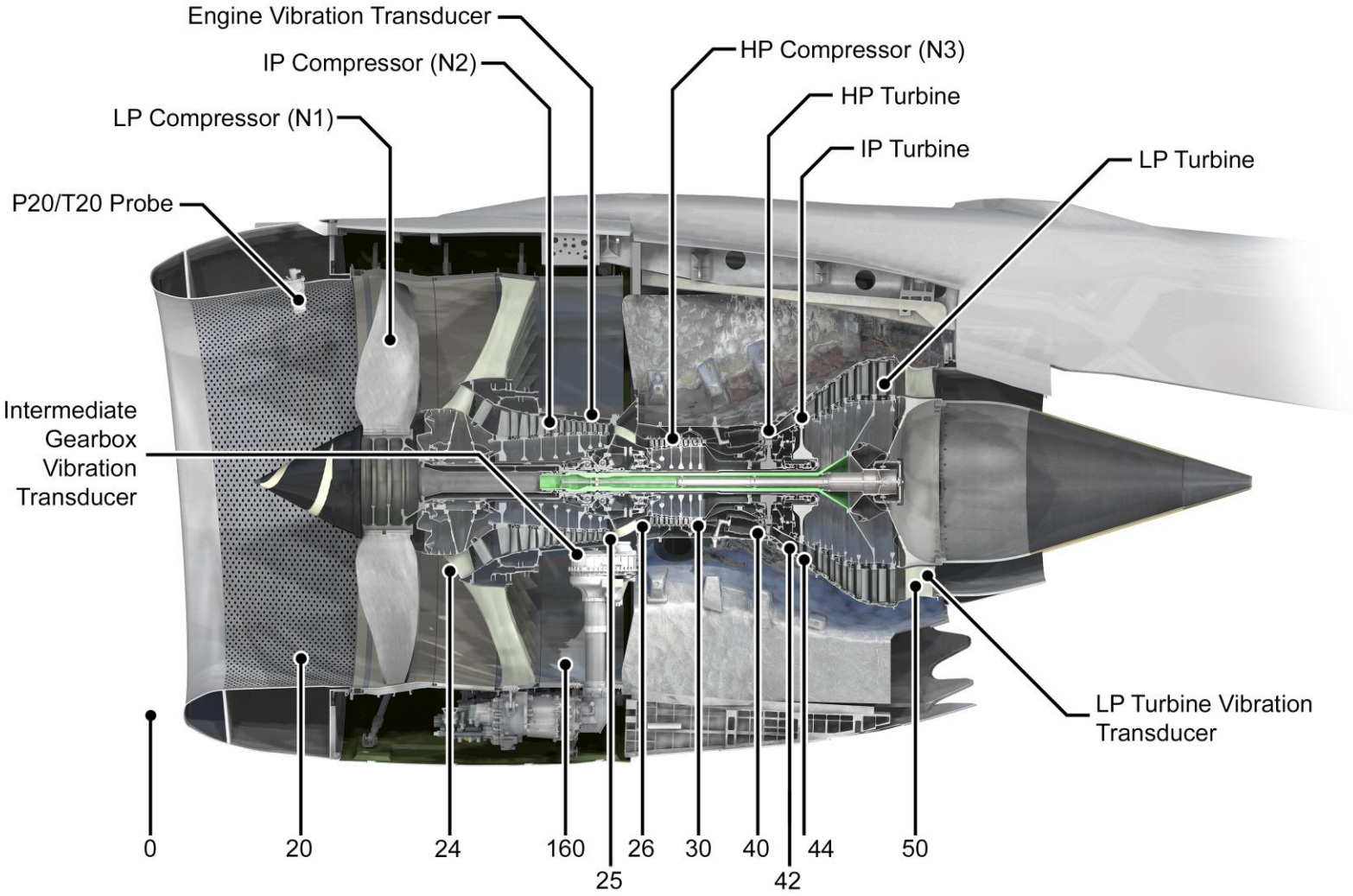

T1000 TEN_LBM_M06_109_01P

ENGINE INSTRUMENTATION

© Rolls-Royce plc 2018. Use or disclosure is subject to the legend on the Notice to Holder page

Shaft Speed Measurement

Introduction

There are three rotating systems in the engine called the Low Pressure (LP), Intermediate Pressure (IP) and High Pressure (HP), all of which are free to rotate independently of each other.

The rotational speed of each system is measured separately and displayed as N1% for the LP, N2% for the IP and N3% for the HP and are displayed on the EICAS displays in the flight deck.

LP Shaft Speed Measurement (N1%)

The engine has four compressor (N1C) speed probes in the Front Bearing Housing (FBH), and four turbine (N1T) speed probes in the Tail Bearing Housing (TBH).

Two compressor and two turbine probes are used to measure LP speed by interacting with two phonic wheels, one at the compressor end, and one on the turbine end. Each phonic wheel has 60 equally spaced teeth on its circumference. The LP Compressor phonic wheel has one tooth shorter than the rest to give a once per revolution signal to the fan trim-balancing function in the EMU.

As each tooth passes through the magnetic fields generated by the speed probes, a change in the magnetic flux produces an electrical pulse, the frequency of which is directly proportional to LP speed.

The outputs from the speed probes are sent to the EEC which converts the analogue frequency to a digital output for display on EICAS.

Channel A of the EEC also provides 3 hardwired analogue N1 speed signals to the Engine Monitoring Unit (EMU).

IP Shaft Speed Measurement (N2%)

The engine uses four compressor (N2C) speed probes in the Front Bearing Housing (FBH) to measure IP shaft speed.

The speed probes interact with a 60-tooth phonic wheel on the IP compressor front stubshaft. As each tooth passes through the magnetic fields generated by the speed probes, a change in the magnetic flux produces an electrical pulse, the frequency of which is directly proportional to IP speed.

The outputs from the speed probes are sent to the EEC, which converts the analogue frequency to a digital output for display on EICAS.

Channel A of the EEC also provides two hardwired analogue N2 speed signals to the EMU.

The External Gearbox mounted Permanent Magnet Alternator (PMA) also provides a back up N2 speed signal for the aircraft.

HP Shaft Speed Measurement (N3%)

To measure HP shaft speed, a speed probe with two coils is located in the Internal Gearbox.

The probe interacts with a 44 tooth phonic wheel located on the outer edge of the HP bevel gear. As each tooth passes through the magnetic field generated by the speed probe, a change in the magnetic flux produces an electrical pulse, the frequency of which is directly proportional to IP speed.

The outputs from the speed probes are sent to the EEC, which convert the analogue frequency to a digital output for display on EICAS.

Channel A of the EEC also provides a single hardwired analogue N3 speed signal to the EMU.

© Rolls-Royce plc 2018. Use or disclosure is subject to the legend on the Notice to Holder page

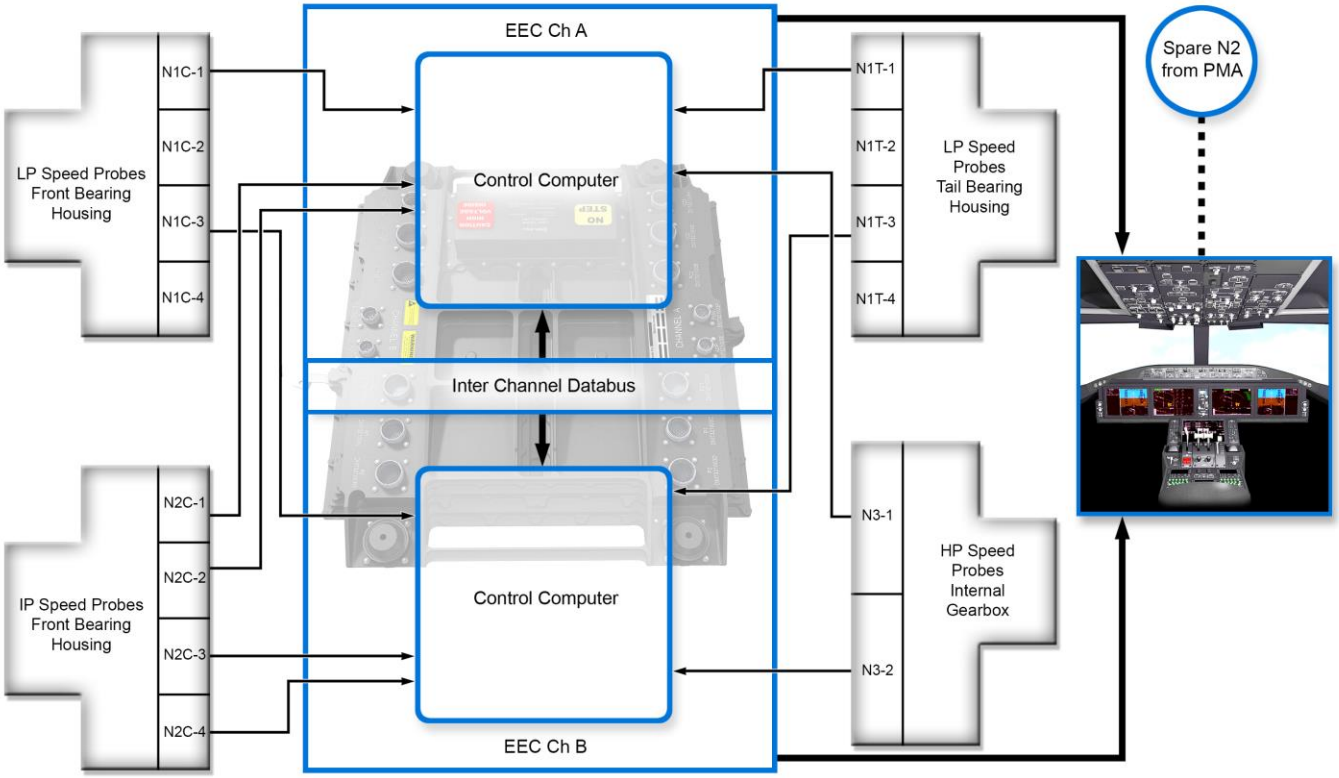

T1000 TEN_LBM_M06_110_01P

SHAFT SPEED MEASUREMENT

© Rolls-Royce plc 2018. Use or disclosure is subject to the legend on the Notice to Holder page

Engine Pressure and Temperature Sensors

Engine P0

Purpose

P0 is part of the suite of Air Data Parameters (P0, and P20/T20) which are used in the calculation of altitude, engine Mach number, thrust, the setting of take-off, climb, cruise ratings and correcting controlling calculations to Sea Level Static Conditions.

Location

There are two P0 sensors inside the EEC, one for Channel A and one for Channel B.

Description

The P0 sensors are located inside the EEC and are exposed to static ambient air pressure through ventilation ports on its body.

The EEC checks engine P0 against the static air pressure sensed by the aircraft (Pambient). In normal operation the EEC will use aircraft P0, only using engine P0 if it cannot validate aircraft static air pressure.

The EEC broadcasts and receives air data to and from the aircraft over the CDN.

P20/T20 Probe

Purpose

P20/T20 is part of the suite of Air Data Parameters (P0, and P20/T20) which are used in the calculation of altitude, engine Mach number, thrust, the setting of take-off, climb, cruise ratings and correcting controlling calculations to Sea Level Static Conditions.

Location

The P20/T20 probe projects into the engine inlet airflow to measure total pressure and total temperature in the intake and is mounted inside the inlet cowl 10 degrees to the left of top dead centre when viewed from the rear.

Description

The temperature sensor within the probe uses a dual element resistive temperature device (RTD) to measure total air temperature (T20). The value of T20 is output to both channels of the EEC.

Just above the T20 inlet port, a forward facing pressure port provides a measure of total air pressure (P20). The output is sent to Channel A of the EEC and passed to Channel B via the interchannel bus.

The EEC validates engine P20 and T20 by comparing it to equivalent aircraft parameters (Ptotal and TAT) via the CDN.

The P20/T20 probe is located in a region where ice can form quickly. To prevent ice forming on the probe a 115V AC powered integral heating element is connected to a dedicated Remote Power Distribution Unit (RPDU) which is mounted in the aircraft.

The EEC will signal the RPDU to provide electrical power to the probe heater above 6%N1 via either Channel A or Channel B of the probe. The EECS then monitors the current flow as a means of confirming that the probe is being heated.

© Rolls-Royce plc 2018. Use or disclosure is subject to the legend on the Notice to Holder page

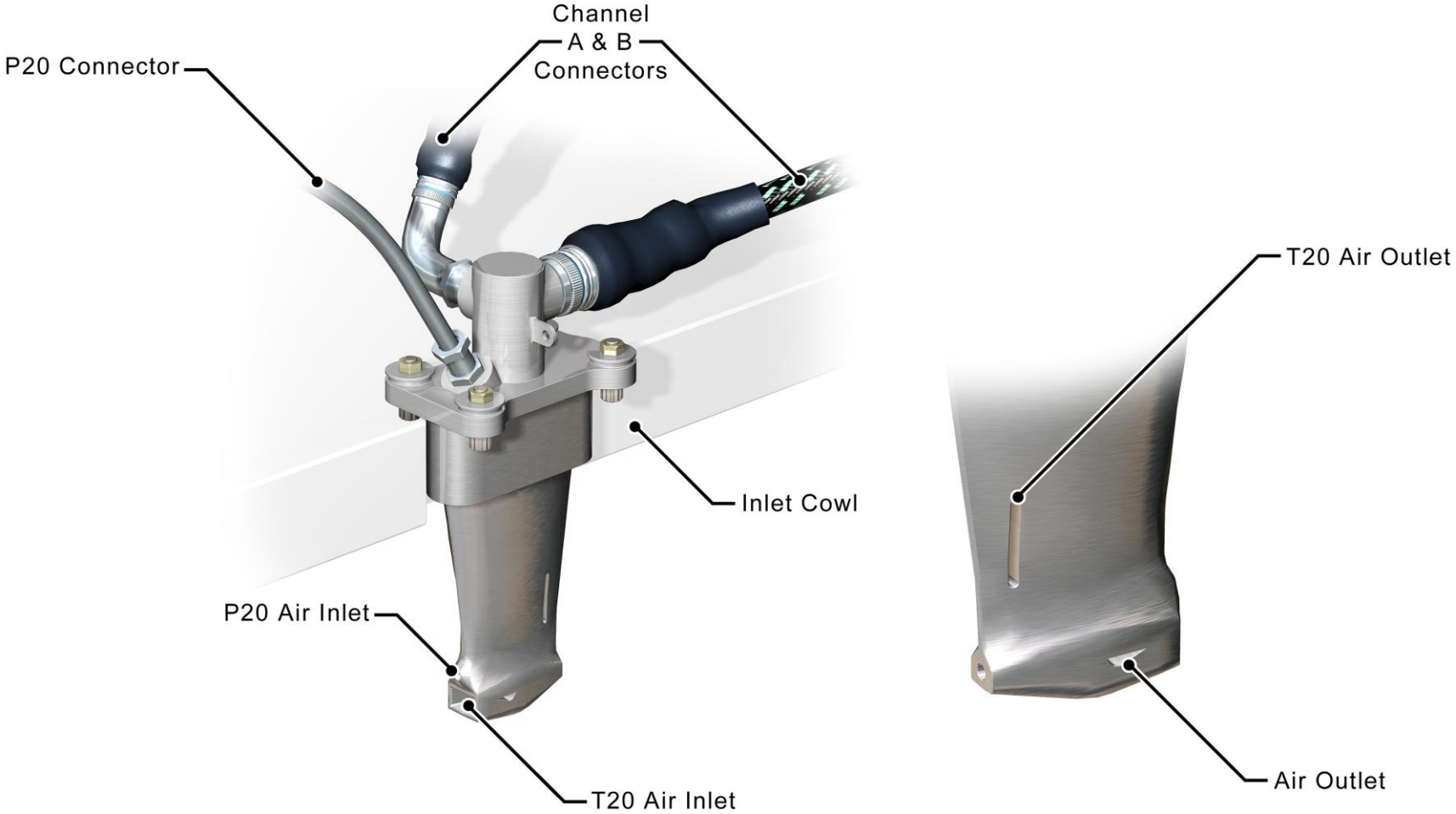

T1000 TEN_LBM_M06_111_01P

P20 / T20 PROBE

© Rolls-Royce plc 2018. Use or disclosure is subject to the legend on the Notice to Holder page

IP Compressor (HPC) Exit Temperature (T25)

Purpose

The T25 thermocouple measures IPC exit air temperature.

Location

The T25 thermocouple is installed on the intermediate casing at the 11o'clock position and protrudes into the duct formed between the IPC exit and the HPC inlet.

Description

The T25 signal is transmitted to Channel A of the EEC where it is used for engine health monitoring.

IP Compressor Exit Pressure Static (PS26)

Purpose

The PS26 probe measures the IP Compressor exit static air pressure.

Location

The PS26 probe is located on the Intermediate Gearbox at the 9 o'clock position. PS26 transducers are located inside both the EEC and EMU.

Description

A static tapping in the intermediate case duct between the IPC exit and HPC inlet senses IPC exit air pressure, where a pipe emerges from the intermediate casing to direct PS26 to the EEC and the EMU.

The PS26 to the EEC is sensed by two transducers, one for each channel and is used for engine control.

The PS26 to the EMU is sensed by a single transducer, which is used by the core engine damage detection function of the engine health monitoring system.

The HP Compressor Exit Temperature (T30)

Purpose

The T30 thermocouples measure HPC exit air temperature.

Location

The two T30 thermocouples are located on the HPC casing at the 11 o'clock and 1 o'clock positions.

Description

Each channel of the EEC receives one T30 signal input. The EEC will use the average value of the two signals in engine starting, rain/hail ingestion detection and engine condition monitoring.

HP Compressor Exit Pressure (P30)

Purpose

The P30 sensors measure HPC exit air pressure.

Location

There are two P30 transducers inside the EEC, one each for Channels A and B.

Description

A pipe, which is connected to a tapping at TDC on the HPC case, takes P30 to the EEC. The P30 pipe is split inside the EEC body before being sent to two P30 transducers, one for each EEC channel. P30 is used in the engine thrust control and surge detection functions of the EEC.

To prevent any moisture formed in the sensing tubes freezing, a flowing P30 system is employed to allow any trapped moisture to drain from the system. The drain point is at the 6 o'clock position on the bifurcation panel.

© Rolls-Royce plc 2018. Use or disclosure is subject to the legend on the Notice to Holder page

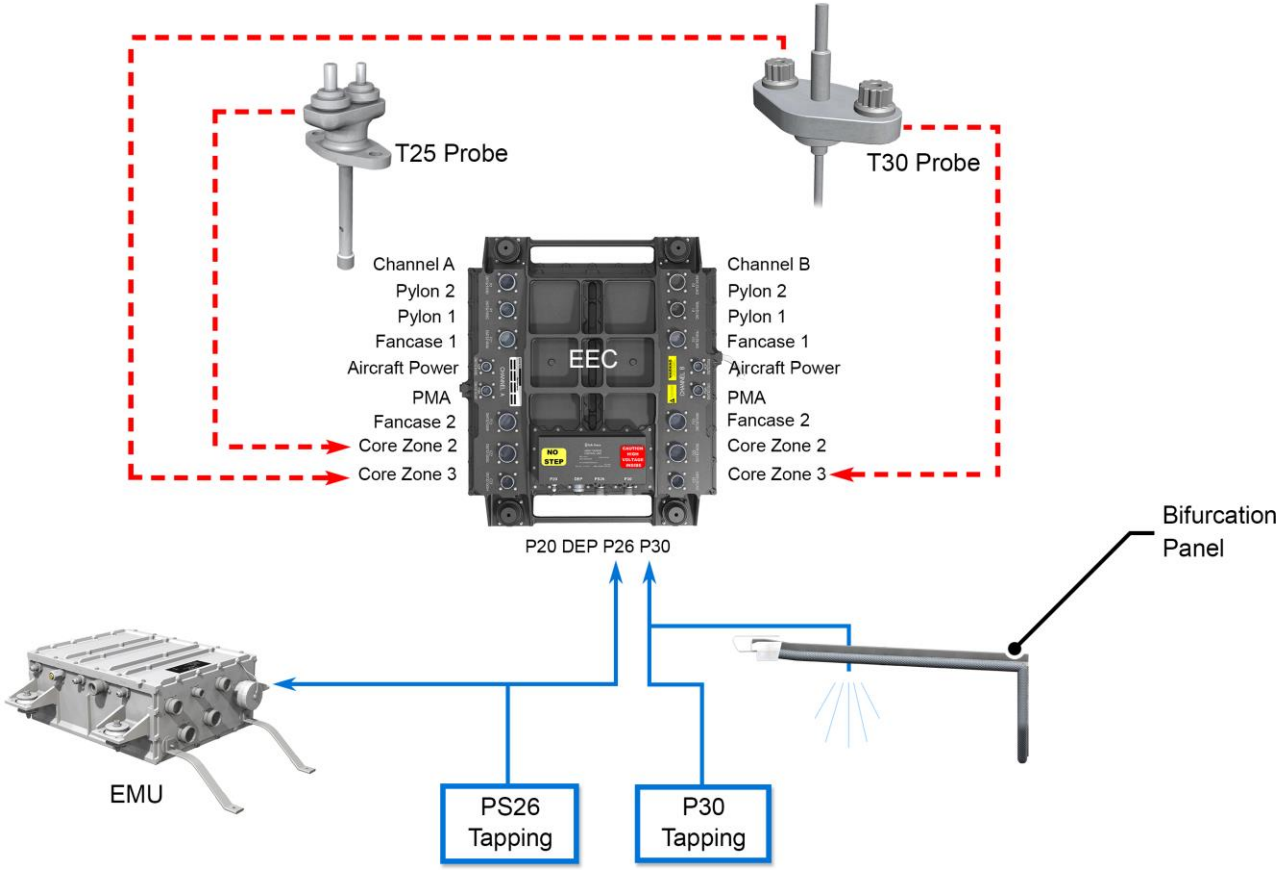

T1000 TEN_LBM_M06_112_01P

ENGINE PRESSURE AND TEMPERATURE SENSORS

© Rolls-Royce plc 2018. Use or disclosure is subject to the legend on the Notice to Holder page

Engine Pressure and Temperature Sensors

There are a further four pressures sensed by the engine. They are only used by the engine health monitoring function of the EMU.

LP Compressor (Fan) Exit Pressure P160

A single point pressure rake on the leading edge of the upper splitter fairing senses P160 total pressure. A pipe connects the pressure rake to the EMU which uses the pressure reading in turbine performance trending and in its fan damage detection functions.

IP Turbine Inlet Static Pressure (PS42)

A static tapping at the 10 o'clock position on the IPT casing, in line with the IP NGVs is used to sense PS42. The tapping is part of the Turbine Cooling Air Forward (TCAF) probe and connects to the EMU, which uses the pressure reading in turbine performance calculations.

LP Turbine Inlet Static Pressure (PS44)

A static tapping at the 11 o'clock position on the IPT casing, in line with the LP NGVs, is used to sense PS44. A pipe connects the tapping to the EMU, which uses the pressure reading in turbine performance calculations.

LP Turbine exit temperature (T50)

A T50 thermocouple measures the temperature of the gas leaving the LP turbine. The T50 thermocouple is located on the inner surface of the Exhaust Case at the 9 o'clock position. The T50 signal is transmitted to the EMU for use in turbine performance trending.

© Rolls-Royce plc 2018. Use or disclosure is subject to the legend on the Notice to Holder page

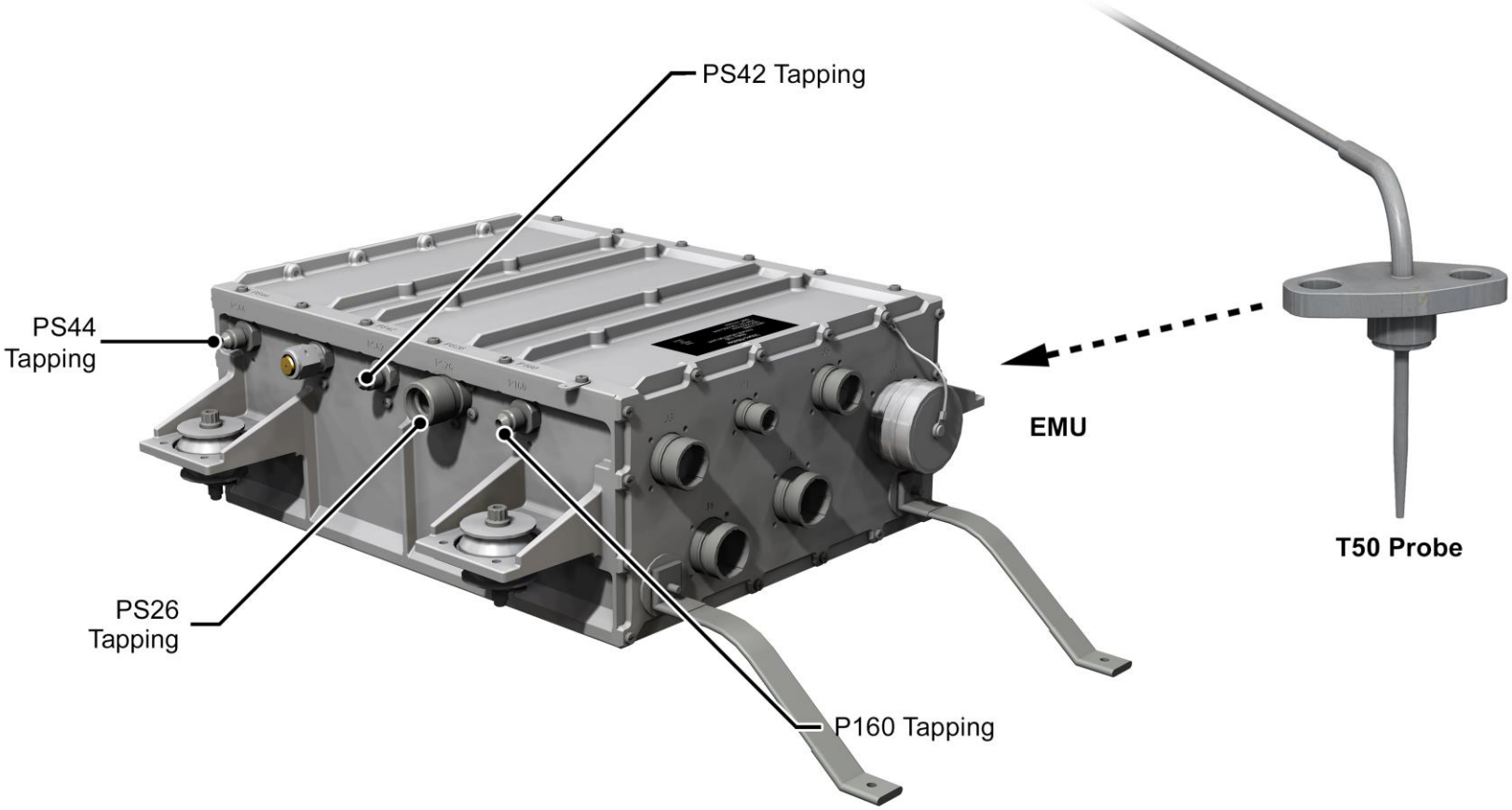

T1000 TEN_LBM_M06_113_01P

ENGINE PRESSURE & TEMPERATURE SENSORS

© Rolls-Royce plc 2018. Use or disclosure is subject to the legend on the Notice to Holder page

Turbine Gas Temperature (TGT) Thermocouple System

Purpose

The purpose of the Turbine Gas Temperature (TGT or T44) system is to measure the temperature of the annulus gas within the turbine casing for use in engine control, starting and to provide a flight deck indication, where it is displayed as Engine Gas Temperature (EGT).

Location

The TGT thermocouples are located in the LPT stage 1 NGV's.

Description

The Trent 1000 measures TGT through two separate, but identical systems. Each system comprises 6 dual element thermocouples connected to a TGT harness. One system is connected to Channel A of the EEC and the other to Channel B.

The 12 TGT thermocouples are bolted to the outside of the IP turbine case and protrude into the LP Turbine Stage 1 Nozzle Guide Vanes (LP1 NGV) to sample the gas temperature. The thermocouples generate an electrical voltage proportional to the temperature felt by the thermocouple.

Each thermocouple is connected in parallel to the TGT harness at the negative and positive terminal posts, which are of different size to prevent incorrect connection to the TGT harness.

Each TGT harness has a positive and negative wire, one Nickel Chromium (NiCr) and one Nickel Aluminium (NiAl). Each harness sends an average value of the raw untrimmed TGT from its six thermocouples to its respective EEC channel.

TGT Trimming

The hottest (and therefore limiting) temperature felt by the rotating parts of an engine is HP **T**urbine **E**ntry **T**emperature, (**TET** or T40). Since TET is too hot to be measured reliably except on a test cell, an alternative method of measuring T40 must be used.

The method used establishes a relationship between T40 and LP Turbine Entry Temperature (T44) on the test bed. Once that relationship is known a value of T40 can be inferred from T44. This is known as the 'TET/TGT relationship'.

By monitoring the EGT on EICAS the flight crew can operate the engine to a TGT (T44), without exceeding the engine's maximum TET (T40) limit.

However, small variations in turbine efficiencies result in the T40/T44 relationship varying between engines. If not addressed then one engine could have a different EGT limit than another engine.

To ensure that all engines operate to the same EGT limit, the TGT is trimmed. The amount of trim to be applied is programmed into the Data Entry Plug (DEP). For the Trent 1000 three separate TGT trims will be input from the DEP, one at Max Continuous, at Max Take-Off and at Max Overtemp.

The EEC then applies the trims from the DEP to the raw TGT values from the thermocouples to become TGT Trimmed. It is this value that is displayed on the flight deck as EGT.

© Rolls-Royce plc 2018. Use or disclosure is subject to the legend on the Notice to Holder page

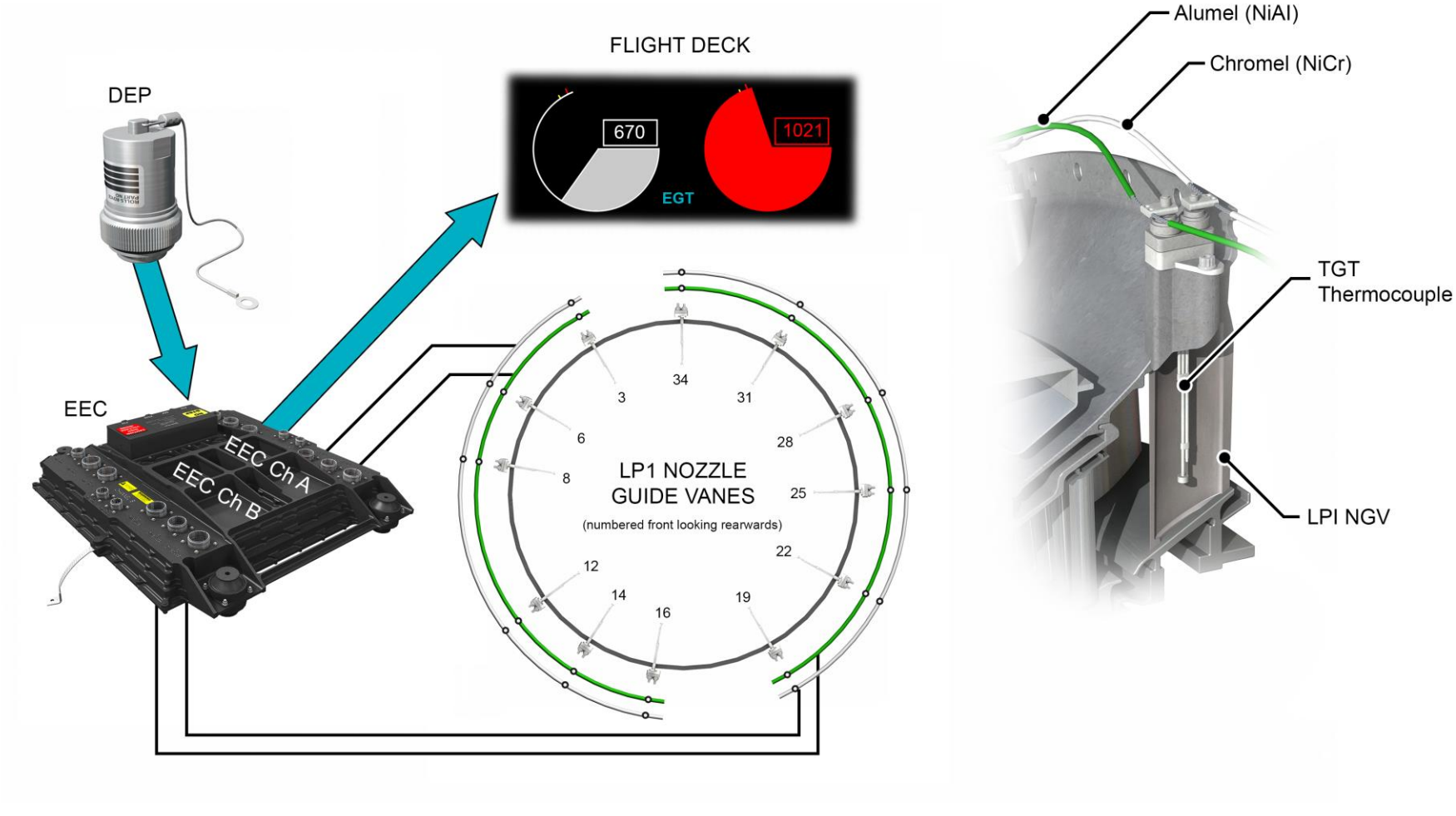

TURBINE GAS TEMPERATURE (TGT) SYSTEM

© Rolls-Royce plc 2018. Use or disclosure is subject to the legend on the Notice to Holder page

Turbofan Power Ratio (TPR) System

Introduction

Due to the Trent 1000 having a high bypass ratio the traditional aircraft thrust parameter (Engine Pressure Ratio (EPR) cannot be used, as the range between Idle and Max Power is very small. For this reason a parameter called Turbofan Power Ratio (TPR) is used.

Location

TPR is indicated on the EICAS screen and is calculated by the EEC using:

- Total air pressure and temperature (P20/T20).
- Turbine Gas Temperature (TGT).
- HP Compressor exit pressure, P30.

Purpose

The purpose of TPR is to provide a representative measurement of thrust when the engine is mounted to the aircraft and thus to the flight crew.

History

It is recommended the reason for moving to this thrust represented parameter be understood before describing the system.

A widely used parameter for thrust indication is LP speed (N1). Whilst simple to measure and accurate in itself it is not, however, the most accurate or consistent measurement of engine thrust. As a result, N1 rated engines need to be over boosted to ensure the certified thrust levels are delivered regardless of conditions. This means an N1 rated engine is generally working harder than it needs to therefore affecting its rate of detioration and time on wing.

For this reason Rolls-Royce has, up until the introduction of the Trent 900 and Trent 1000, used Engine Pressure Ratio (EPR) to represent thrust on the aircraft. Whilst being more complex than N1 speed to calculate, EPR provides a more accurate and consistent indication of thrust that is unaffected by humidity and LP Compressor deterioration.

Turbofan Power Ratio (TPR) is a thrust representing parameter, which has been patented by Rolls-Royce, and is based on the accuracy principles of EPR.

The Trent 900, Trent 1000 and now the Trent XWB engine designs however, have a significantly higher bypass ratio, when compared to the previous Trent designs (Trent 500, Trent 700 and Trent 800), but a lower pressure ratio across the LP Compressor.

If EPR were to be used the calculation would be adversely affected by the low LP Compressor pressure ratio therefore7, as stated earlier, making the range between Idle and Max very small.

As a measure of core engine power, TPR is similarly unaffected by humidity changes and fan condition variations and is better suited than EPR for accurate thrust indication and control on low fan pressure ratio engines, hence the move to this parameter on the latest design of Trent engines.

© Rolls-Royce plc 2018. Use or disclosure is subject to the legend on the Notice to Holder page

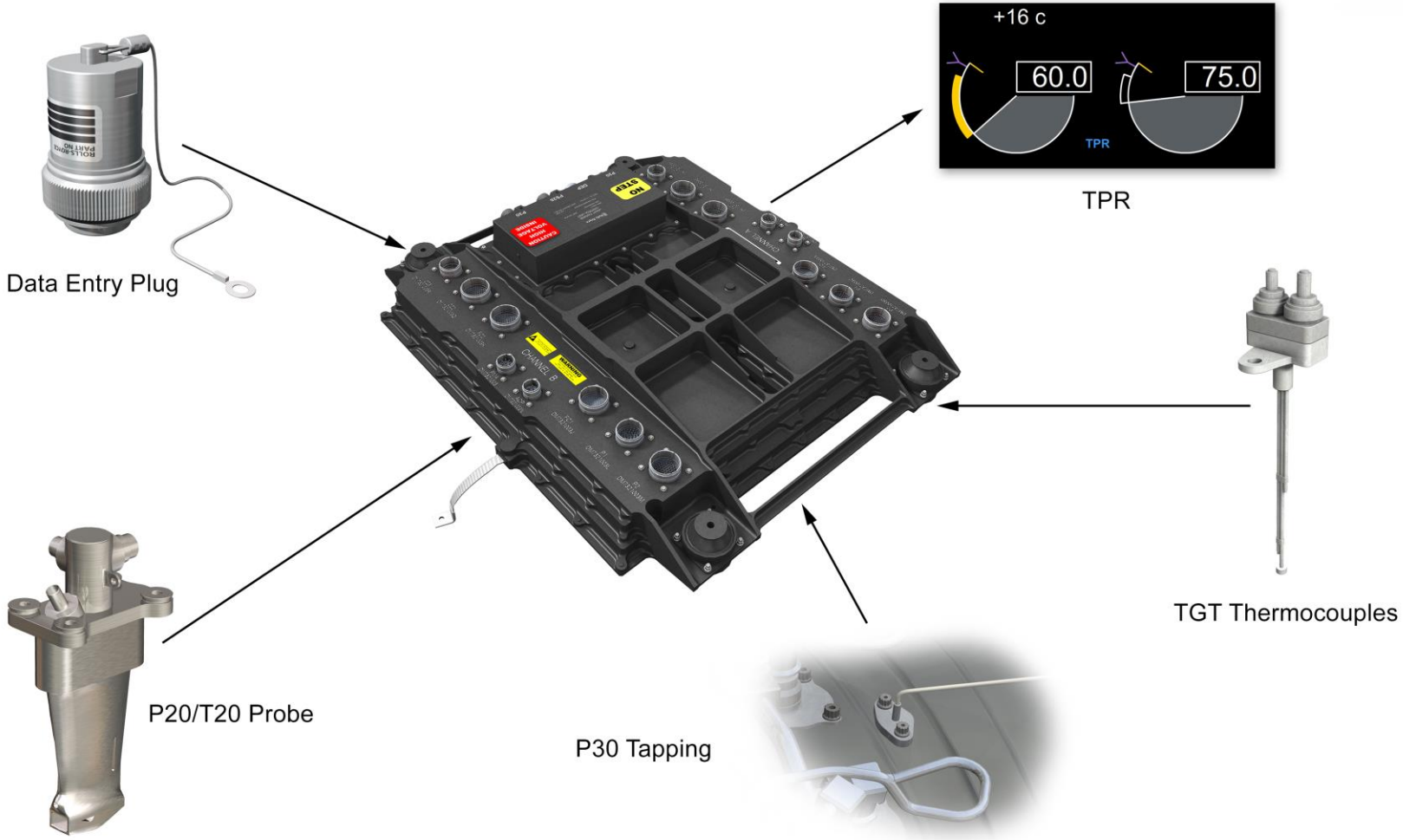

T1000 TEN_LBM_M06_115_01P

TURBOFAN POWER RATIO (TPR) SYSTEM

© Rolls-Royce plc 2018. Use or disclosure is subject to the legend on the Notice to Holder page

Turbofan Power Ratio (TPR) System

Description

The TPR indicating system has four main components:

- The EEC.
- The P30 probe.
- The TGT thermocouples.
- The P20/T20 probe.

Using these parameters, TPR is expressed as:

$$TPR = \left(\frac{P30 \times \sqrt{TGT}}{P20 \times \sqrt{T20}} \right)$$

Operation

TPR provides an accurate indication of core gas generator power that is available to do work at the LP turbine. The overall engine pressure ratio (P30/P20) is an indication of the core gas generator power available to do work at the turbines in particular the LP turbine.

In a similar way the overall temperature ratio is represented by TGT/T20. Using this in combination with the overall pressure ratio, TPR provides an accurate and consistent indication of power to drives the fan that produces the majority of engine thrust.

This power pressure ratio is corrected for temperature at the critical points within the engine, TGT (inlet to LP Turbine) and T20 (inlet to the LP Compressor). This removes the effects of temperature on the performance figures so it remains reliable and repeatable for all conditions.

TPR is calculated using dispatch critical signals so is an inherently reliable parameter for thrust indication. The operating range typically varies from 5 at idle to around 100 at max power and is also linear to thrust. As such the maximum TPR value will change pro-rata when derated take-off and climb thrust selections are made.

© Rolls-Royce plc 2018. Use or disclosure is subject to the legend on the Notice to Holder page

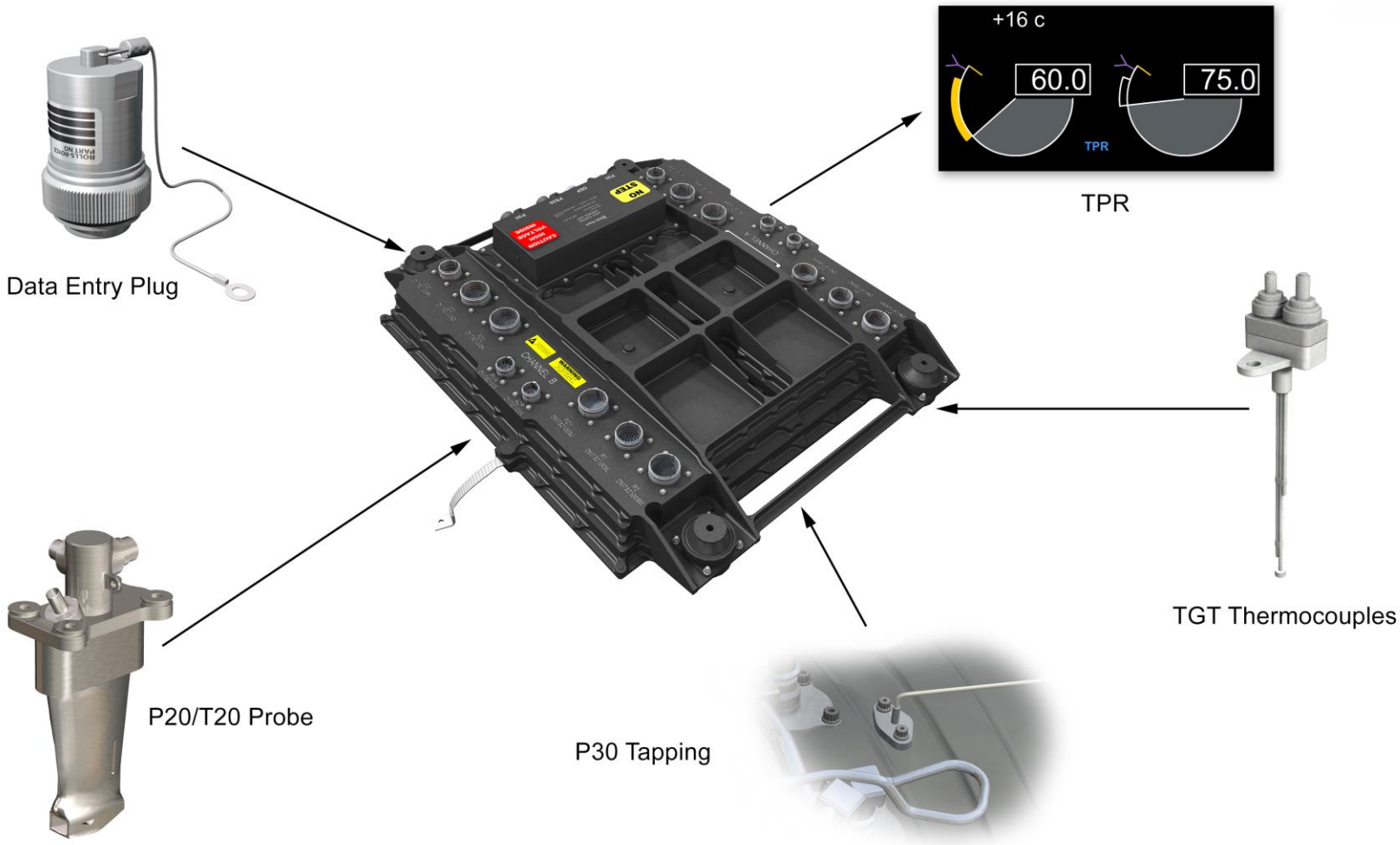

T1000 TEN_LBM_M06_115_01P

TURBOFAN POWER RATIO (TPR) SYSTEM

© Rolls-Royce plc 2018. Use or disclosure is subject to the legend on the Notice to Holder page

TPR Trimming

Description

In order for TPR to provide the flight crew with a valid indication of engine thrust, the relationship between thrust and TPR must be established. The relationship between the two is established on a test cell during engine pass-off testing.

However due to manufacturing tolerances the actual TPR at a measured thrust can vary for each engine. If the engine-to-engine variance in the thrust/TPR relationship is not addressed then one engine may deliver more (or less) thrust at the same value of TPR than another engine.

Therefore, to ensure the thrust/TPR relationship is the same for all engines, TPR trimming is required. The amount of trim to be applied is programmed into the Data Entry Plug (DEP) after engine pass-off testing. For the Trent 1000 three separate engine TPR trim points will be stored in the DEP.

The EEC accesses the values of TPR held in the DEP and applies them to the corrected TPR values to send trimmed TPR to the flight deck display. TPR values will typically range from 5 at idle power to approximately 100 at higher thrust levels.

Alternate (N1) Operation

If the EEC can no longer compute TPR or the CDN is lost, the EEC will automatically revert to N1 control. In this event the TPR analogue and digital indications on the EICAS display go blank. This alternate mode is described as ‘Soft Alternate Mode’.

The flight crew may also manually select the EEC to control the engine to an N1 speed and is described as ‘Hard Alternate Mode.’ This is carried out by depressing a guarded switch on the overhead panel (P5 panel).

If one engine automatically reverts to N1 control, the flight crew must retard the thrust lever to a mid-thrust position and then manually select N1 control by depressing the EEC Mode Switch for that particular engine. The other engine must then also be manually selected to N1 control by depressing the EEC Mode Switch for the engine.

© Rolls-Royce plc 2018. Use or disclosure is subject to the legend on the Notice to Holder page

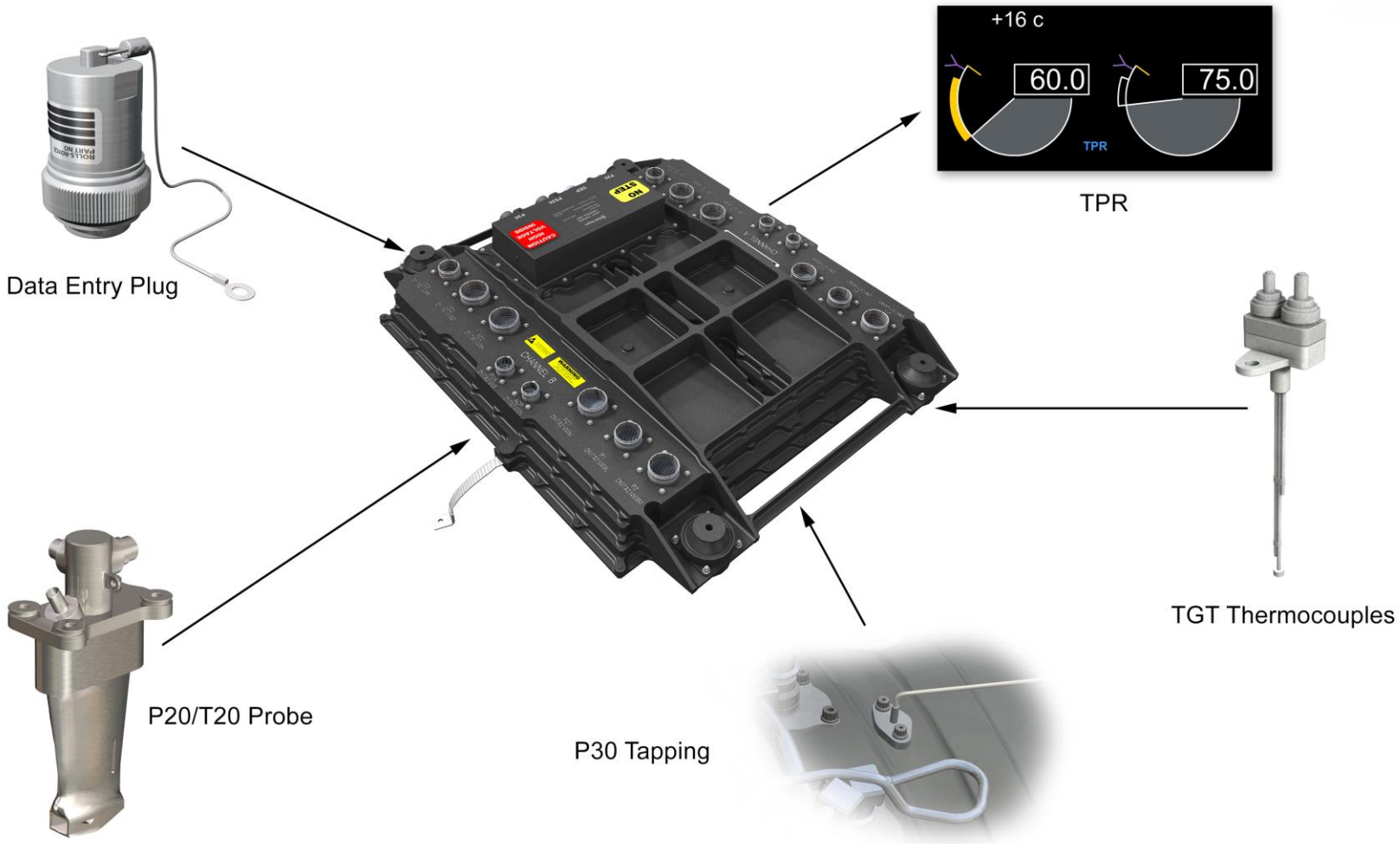

T1000 TEN_LBM_M06_115_01P

TPR TRIMMING

© Rolls-Royce plc 2018. Use or disclosure is subject to the legend on the Notice to Holder page

Vibration System

Purpose

The purpose of the vibration monitoring system is to:

- Provide a flight deck indication of the state of balance of the main rotating assemblies (LP, IP and HP).
- Gather and store vibration data for the engine health monitoring system.
- Provide data for on-wing trim balancing of the LP Compressor and turbine assemblies.

Location

The vibration system consists of the following:

- The Engine Monitoring Unit (EMU), mounted on the left side of the LP Compressor Case at the 9 o'clock position.
- A dual-channel engine vibration transducer located in Zone 2, on the Intermediate Case at the 12 o'clock position.
- A single-channel LPT vibration transducer is located in Zone 3, on the engine Tail Bearing Housing at the 2 o'clock position.
- A single-channel transmission system vibration transducer is located on the Intermediate Gearbox inside the lower splitter fairing.

Description

Each vibration transducer consists of a compression type piezo-electric crystal that gives an electrical signal proportional to vibration to the EMU. A charge converter within the EMU amplifies the signals it receives prior to them being processed and is used for three different functions.

Flight Deck Indication

The dual channel engine vibration transducer records vibration levels in the Internal Gearbox, which is where the LP, IP and HP location bearings are found. The EMU processes the data into broadband vibration, and N1, N2 and N3 vibration levels for each of the three shafts.

The highest vibration levels are shown on the flight deck and will generate an alert if vibration levels exceed a maximum.

Engine Health Monitoring (EHM) System

The EHM system uses vibration data processed by the EMU from all the vibration transducers.

The Intermediate Case transducer senses vibration levels felt by the engine location bearings, the LPT vibration transducer senses vibration levels felt by the LP turbine and the Intermediate Gearbox vibration transducer senses vibration levels felt by the transmission system components.

The data from these sources is gathered by the EHM system for storage by the aircraft for subsequent analysis, or used to create real time events and alerts.

Engine Trim Balancing

Vibration data from the Intermediate Case and the LPT vibration transducers is used by the aircraft trim balancing system to carry out balancing of the LP Compressor and Turbine.

A signal from a single short tooth on the LP compressor phonic wheel helps to determine the phase angle of the out-of-balance.

© Rolls-Royce plc 2018. Use or disclosure is subject to the legend on the Notice to Holder page

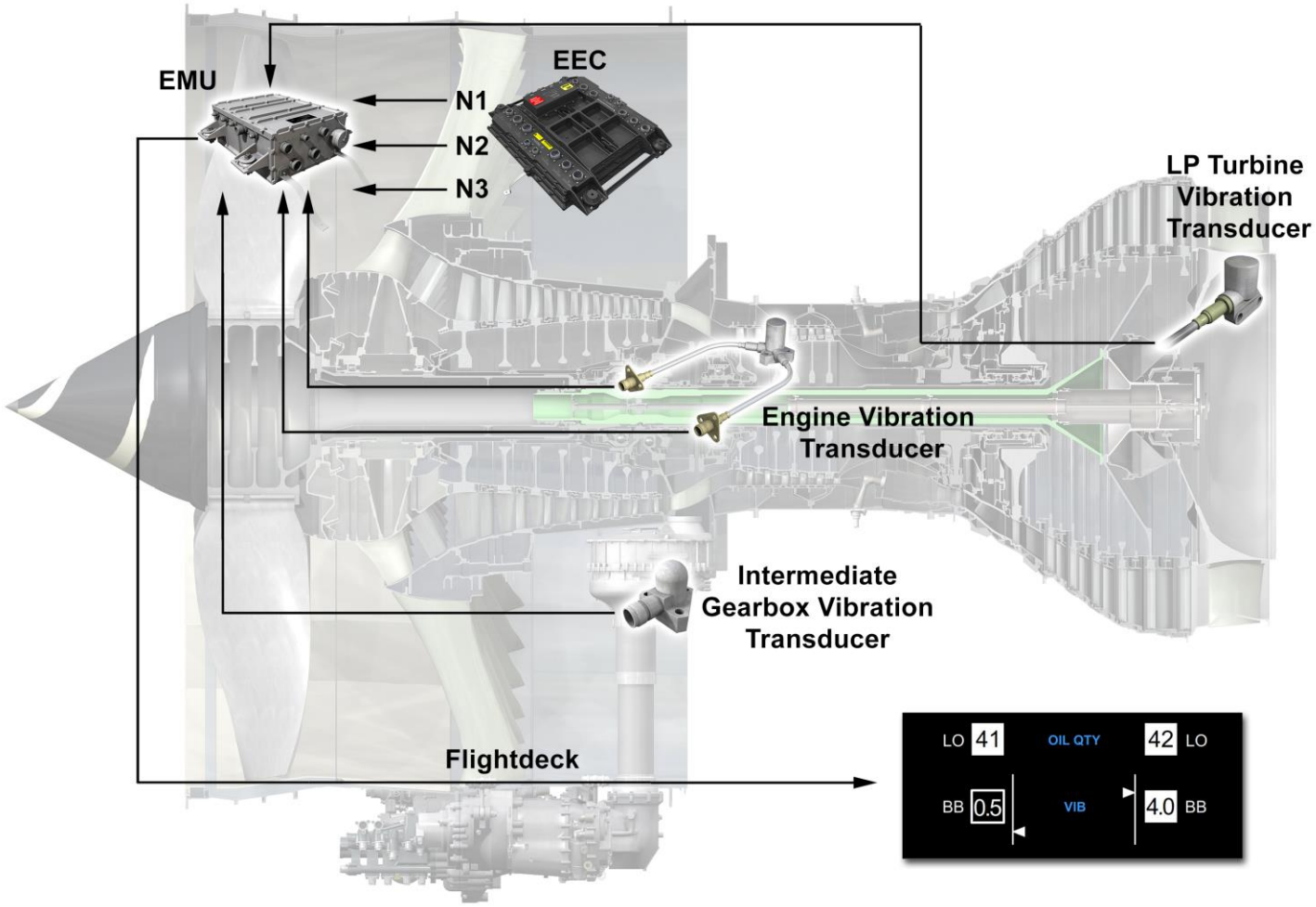

T1000 TEN_LBM_M06_117_01P

VIBRATION SYSTEM

© Rolls-Royce plc 2018. Use or disclosure is subject to the legend on the Notice to Holder page

Flight Deck Effects

Introduction

Below is an indication of the associated Flight Deck Effect (FDE) massages with this section (Engine Indicating) together with the message type (level), an explanation of its meaning, dispatch restrictions (if any) and expected actions taken by flight or ground crew.

Note: This is for your guidance only. Due to the nature of the aircraft and engine continual development these may change and Rolls-Royce cannot guarantee that they are still current and fully accurate. As such, always refer to the appropriate AMM procedure for reference.

© Rolls-Royce plc 2018. Use or disclosure is subject to the legend on the Notice to Holder page

Message	Type	Dispatch	Meaning
ENG LIMIT EXCEED L (R)	Caution	Not Applicable	Left (Right) Engine exceeded an operating limit (EGT Amber or Red Line, N1, N2 and N3).
ENG LIMIT PROT L (R)	Caution	Not Applicable	Left (Right) engine control is in the alternate mode (selected via the EEC Mode Switch) and N1 command is 2% greater than maximum N1.
EEC MODE L (R)	Advisory	Time Limited Dispatch	EEC is in the alternate control mode (either by automatically or manually).
ENG RPM LIMITED L (R)	Advisory	Not Applicable	The EEC has detected a rotor speed (N1, N2 or N3) limit control loop when in either Primary Alternate Mode.
ENG CONTROL L (R)	Status	No Dispatch	This message has a number of reasons to be annunciated and shows the EEC may be operating with a limited set of engine control parameters. Faults with items or parameters covered in this section (section 6) can all be possible causes (DEP, Speed probes, TGT, P20/T20, P0, P30, T30, PS26).
ENG EEC C1 L (R)	Status	Time Limited Dispatch	The engine control system is operating with reduced redundancy or EEC data from one channel is not available to EICAS. Faults with items or parameters covered in this section (section 6) can all be possible causes (Speed probes, TGT, P20/T20, P0, P30, T30, PS26).
ENG EEC MODE L (R)	Status	Time Limited Dispatch	Primary Control Mode (TPR) is invalid and the EEC is operating in Alternate Mode due to loss of valid air data inputs or signal faults that contribute to TPR derivation.

T1000 TEN_LBM_M06_118_01P

© Rolls-Royce plc 2018. Use or disclosure is subject to the legend on the Notice to Holder page

Indicating Reference Wiring Diagrams

Introduction

Below is a wiring schematic of the associated units connected to the EEC. This is only a representation of the actual connectors but all plugs and connectors are indicated with the reference identifiers. This should be used for reference only and not be used as a definitive document. For a more detailed explanation (pins and sockets for troubleshooting purposes etc) and for further details, then always refer to the actual wiring diagrams as given within the AMM or FIM electronic documentation.

© Rolls-Royce plc 2018. Use or disclosure is subject to the legend on the Notice to Holder page

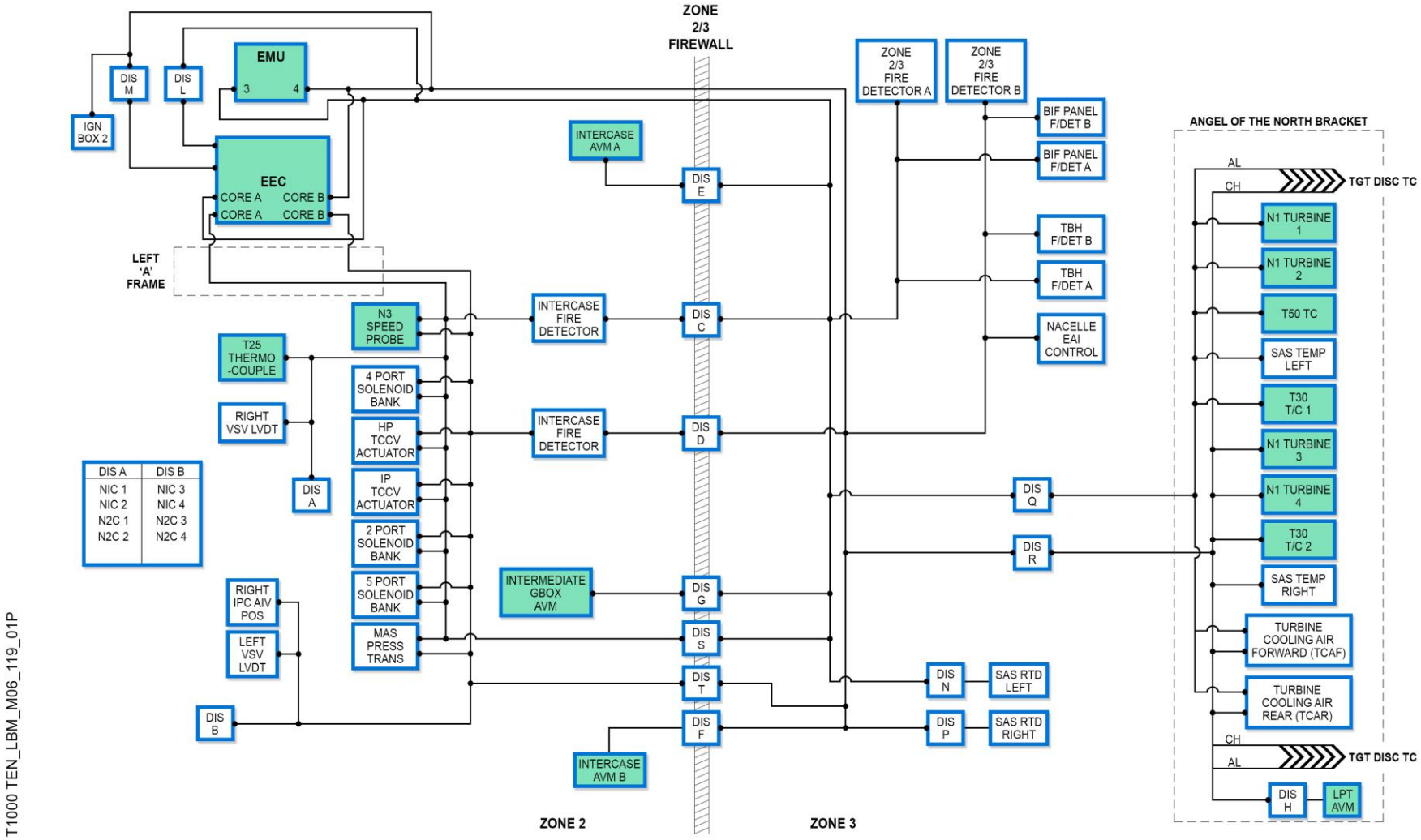

INDICATING WIRING DIAGRAM

© Rolls-Royce plc 2018. Use or disclosure is subject to the legend on the Notice to Holder page

Indicating Reference Wiring Diagrams

Introduction

Below is a wiring schematic of the associated units connected to the EEC. This is only a representation of the actual connectors but all plugs and connectors are indicated with the reference identifiers. This should be used for reference only and not be used as a definitive document. For a more detailed explanation (pins and sockets for troubleshooting purposes etc) and for further details, then always refer to the actual wiring diagrams as given within the AMM or FIM electronic documentation.

© Rolls-Royce plc 2018. Use or disclosure is subject to the legend on the Notice to Holder page

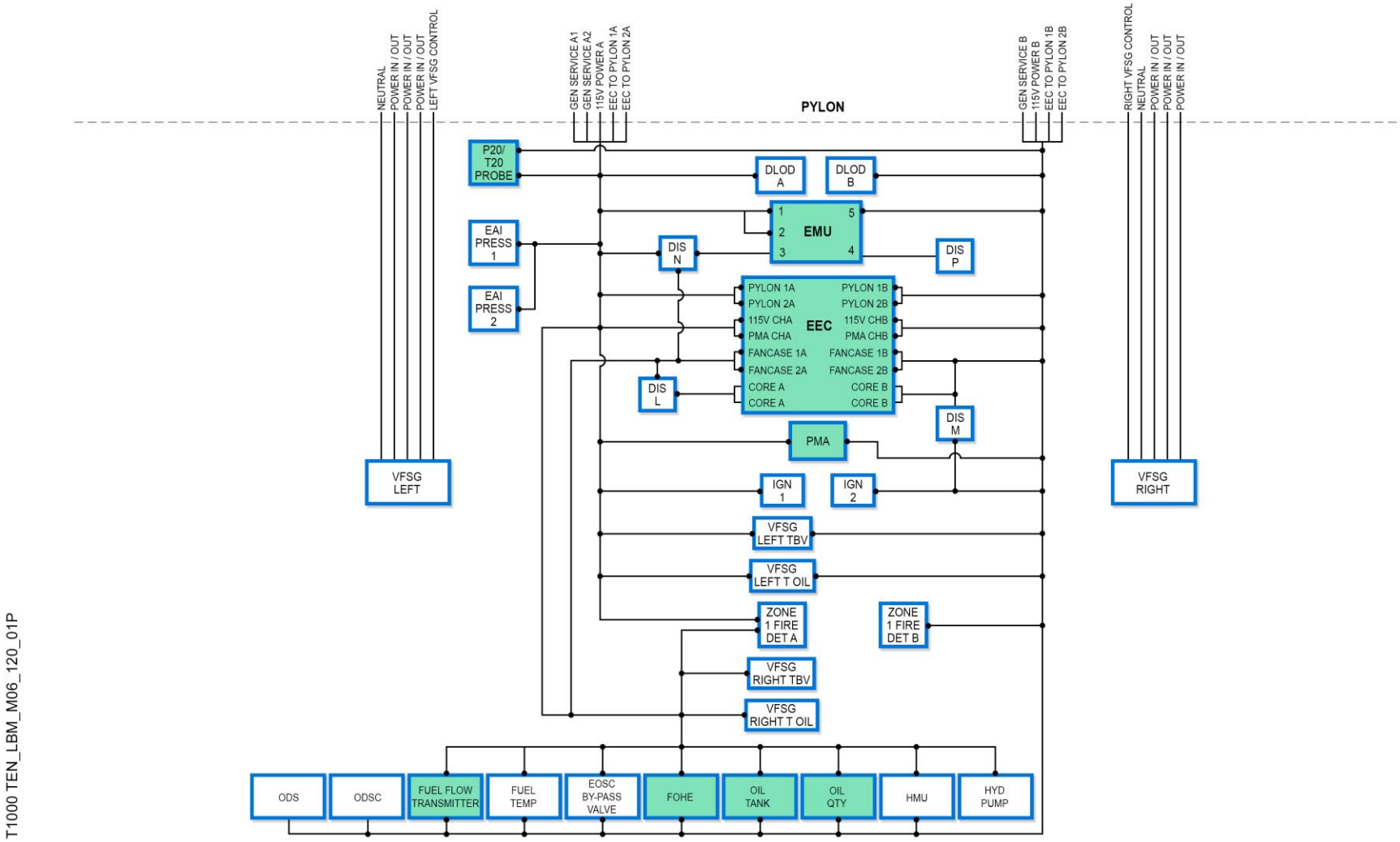

INDICATING WIRING DIAGRAM

© Rolls-Royce plc 2018. Use or disclosure is subject to the legend on the Notice to Holder page

END OF SECTION

Section 7 - Oil System

ATA Chapter Covered:

79

© Rolls-Royce plc 2018. Use or disclosure is subject to the legend on the Notice to Holder page

Oil System Simplified Description

The engine oil system is a full flow re-circulatory system. It supplies oil to lubricate and cool the engine bearings and gears during all operating conditions.

The complete system is divided into four main areas:

- Feed Oil and Cooling.
- Return Oil (Scavenge side).
- Cooling
- Vent, de-aeration and the Breather System.

The oil supply is contained within a tank installed on the right side of the fan case. It incorporates a quantity transmitter, a visual sight glass and provision for gravity oil filling.

The system is vented through a centrifugal breather located in a housing on the front of the external gearbox.

Oil Cooling

Two Engine Oil Surface Coolers (EOSC) and a Fuel Oil Heat Exchanger (FOHE) are used to cool the feed oil.

Oil Filtration & Inspection

Pressure, scavenge and line (last chance) filters provide the necessary filtration. Location for Magnetic Chip Detectors (MCD) are provided in each of the scavenge lines returning to the scavenge pumps.

Pump Assembly

The pump assembly consists of a single pressure pump to move the oil around the system and ten scavenge pumps to return the oil back to the tank from the following areas:

- Front Bearing Housing (FBH).
- Internal Gearbox Front (IGBF).
- Internal Gearbox Rear (IGBR).
- HP Turbine Bearing Chamber (HPT).
- IP Turbine Bearing Chamber (IPT).
- Tail Bearing Housing (TBH).
- Intermediate Gearbox (SAGB).
- External Gearbox (EGB).
- Lower Bevel Box (LBB).
- Breather Scavenge Element (BSE).

Indications

The following indications are provided to the flight deck:

- Oil Tank Quantity - Secondary Engine Display.
- Oil Temperature - Secondary Engine Display.
- Oil Pressure - Secondary Engine Display.
- Oil Scavenge Filter Blockage - Status Display.

© Rolls-Royce plc 2018. Use or disclosure is subject to the legend on the Notice to Holder page

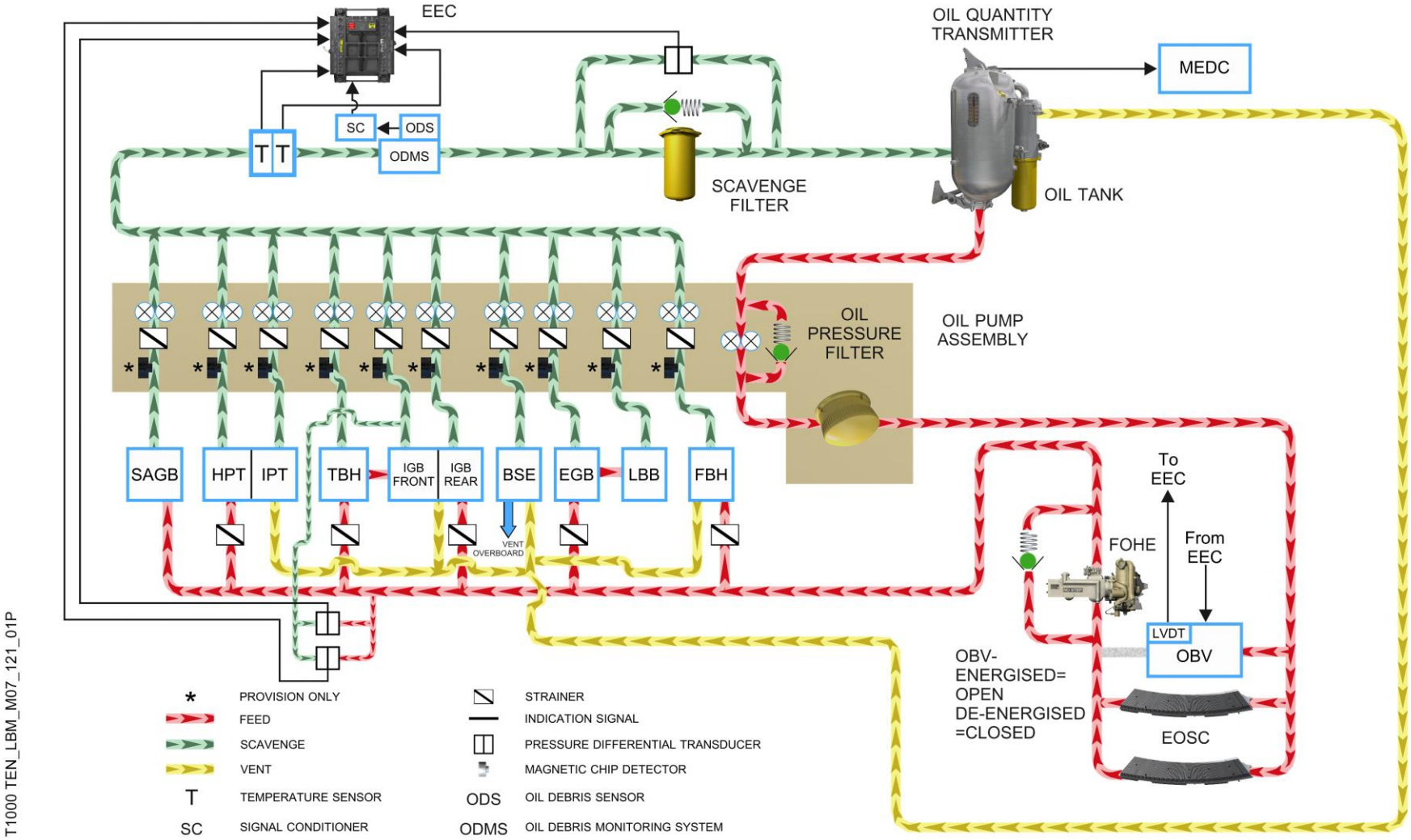

OIL SYSTEM SCHEMATIC

© Rolls-Royce plc 2018. Use or disclosure is subject to the legend on the Notice to Holder page

Feed Oil, Lubrication & Cooling – Description

Feed oil is drawn from the oil tank by a single pressure pump to be circulated through the oil system. A pressure relief valve, set to 600psi, protects the system from excessive pressures and acts as a bypass valve if the oil is cold or during system blockage.

A 125-micron filter cleans the feed oil prior to entering the Fuel Oil Heat Exchanger (FOHE) and two Engine Oil Surface Coolers (EOSCs) which keep the oil temperature within limits.

The main function of the FOHE is to transfer heat from the oil to the fuel to maintain oil and fuel temperature within operating limits. A de-congealing valve protects the FOHE matrix when the engine oil is very cold or if the core is blocked.

From the FOHE the feed oil is supplied through external tubes to the main engine bearings, gears and drives.

Two EOSCs provide additional cooling. When the EEC senses the oil temperature is too high the EEC will close a valve to allow all the oil to flow through the coolers. When the EEC senses the fuel temperature is too low the EEC will open the valve to allow the majority of oil to flow directly to the FOHE with the remainder flowing through the coolers. Each cooler also has a bypass valve in cases of cold oil or matrix blockage.

A Static Anti-Leak Valve in the oil pump prevents oil draining from the system back into the EGB when the engine is not running.

RETURN OIL (SCAVENGE)

The return oil/air is scavenged back to the oil tank by ten pump elements in the pump assembly from each of the eight lubricated areas of the engine and centrifugal breather.

Within the oil pump assembly are positions for ten screw-in type Magnetic Chip Detectors (MCDs) to sample return oil from the engine main bearings, gearboxes and centrifugal breather for debris.

The oil outlet from each of the scavenge pumps join to form a combined scavenge return flow which is sampled by the Oil Debris Sensor (ODS) (part of the Oil Debris Monitoring System, ODMS) before being passed through the 15 micron Scavenge Filter.

The condition of the scavenge filter is monitored by a differential pressure transducer, which provides a flight deck indication of impending filter blockage at 13psid. If the blockage worsens a by-pass valve inside the scavenge filter will open at 20psid allowing oil to flow around the oil system without it being filtered by the scavenge filter.

A dual channel Resistance Temperature Device (RTD) in the scavenge return line to the ODMS provides flight deck indication of oil temperature.

All scavenge oil is de-aerated by a Cyclone Type Separator located within the oil tank.

DE-AERATION, BREATHER AND VENT SYSTEM

IP8 and HP3 air provides the air pressures required to seal the bearing chambers. The oversized scavenge pumps and vent tubes remove the sealing air that continuously flow through the bearing chambers.

The resulting air/oil mist is transferred to the centrifugal breather where the air and oil is separated. The air is discarded overboard and the oil is scavenged back into the combined scavenge line to the oil tank by a dedicated scavenge pump.

© Rolls-Royce plc 2018. Use or disclosure is subject to the legend on the Notice to Holder page

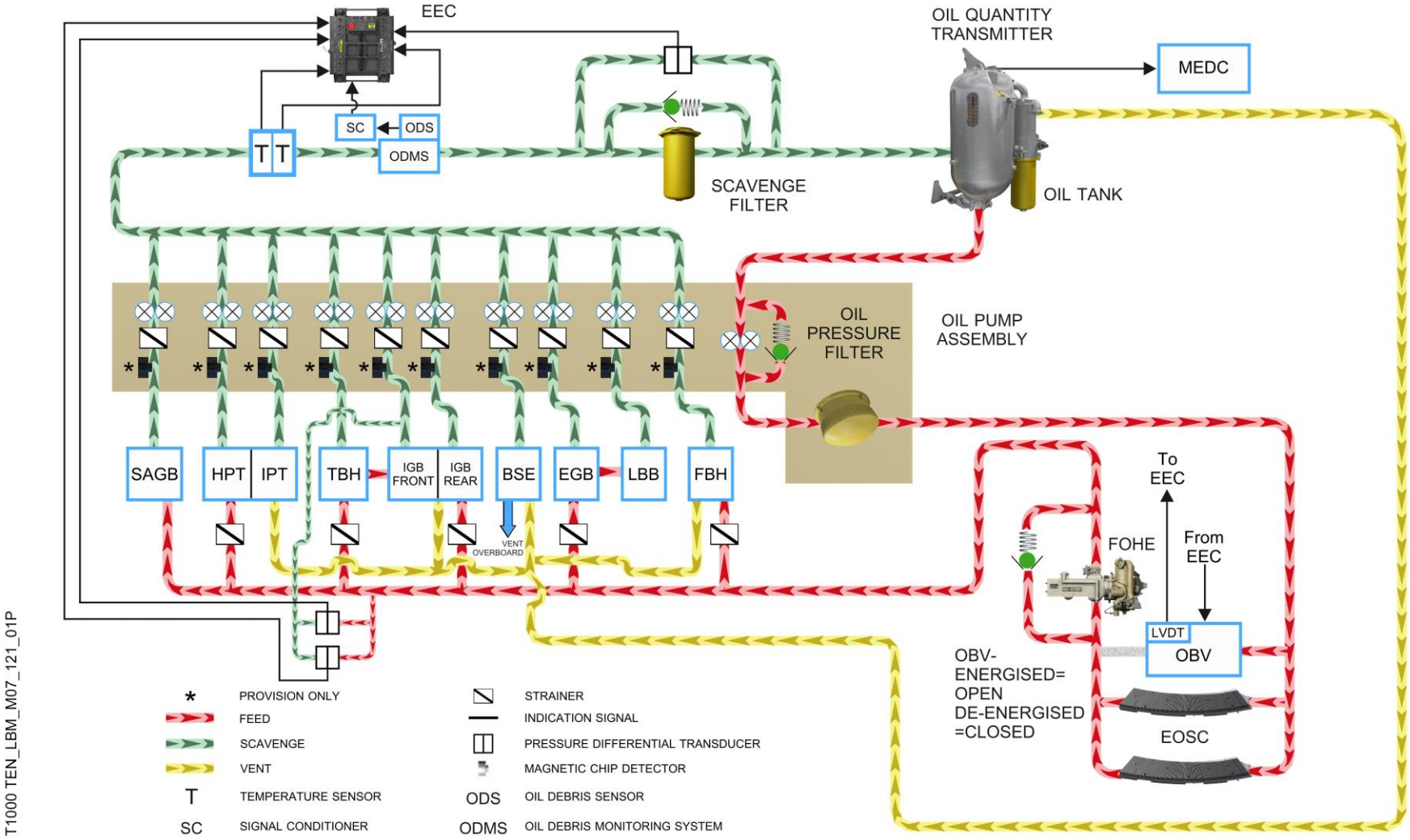

OIL SYSTEM SCHEMATIC

© Rolls-Royce plc 2018. Use or disclosure is subject to the legend on the Notice to Holder page

Oil tank

Purpose

Provide a reservoir for the engine oil system.

Location

The oil tank is attached to the flanges of the LP compressor case on the right side.

Features

The stainless steel main body of the tank is welded to a cast upper dome and a formed sheet metal lower dome. Attached to the oil tank are a number of components as follows:

- Oil Quantity Transmitter.
- Sight glass.
- Oil Filler Assembly.
- Oil Debris Monitoring System (ODMS).
    - Oil Debris Sensor (ODS).
    - Scavenge Filter.
    - Scavenge Filter Differential Pressure Transducer.
- Oil Tank Pressurisation Valve
- Outlet Tube.
- Vent Tube.

Description

The oil tank provides the reservoir for the engine oil system. A tube at the tank base allows oil to be supplied to the pressure pump to feed the oil system. A coarse strainer at the outlet of the tank prevents debris from damaging the oil pump. Air is released from the scavenge oil returning to the oil tank by a de-aerator fitted inside the tank. A vent tube passes the air, which still contains some oil, from the oil tank to the centrifugal breather.

The oil filler assembly has a quick release cap and a flap valve that closes under normal engine oil pressure to minimise oil loss in case the filler cap is not fitted.

Pressure Regulating Valve

To ensure the pressure inside the oil tank is a relief valve is installed in the top of the tank.

Oil Tank Capacities

Total Oil Tank Capacity:	33.5 US Quarts (including air space)
Oil Tank to FULL line:	28.3 US Quarts
Gulp:	5.9 US Quarts
Left to right engine difference:	2.3 US Quarts

© Rolls-Royce plc 2018. Use or disclosure is subject to the legend on the Notice to Holder page

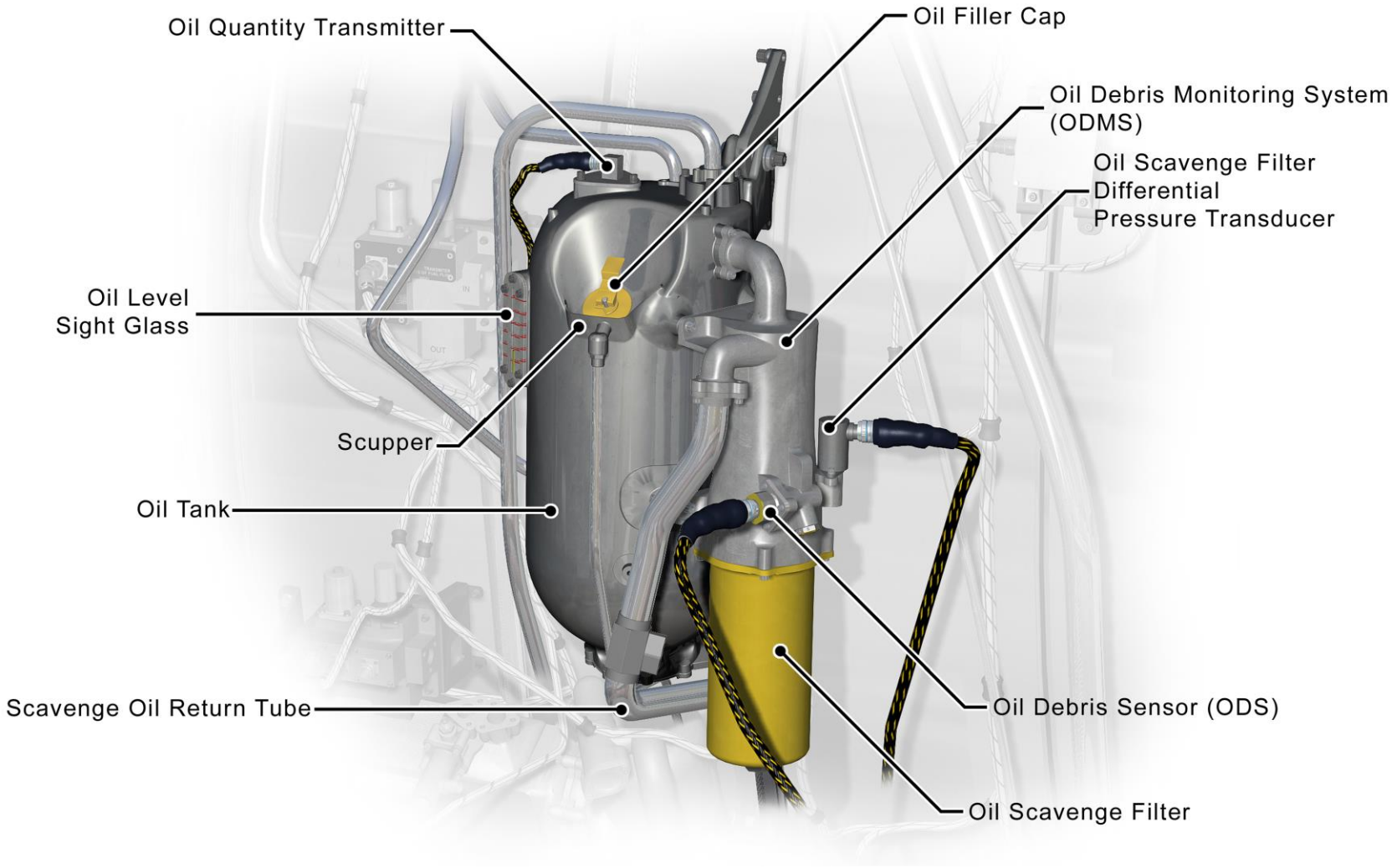

T1000 TEN_LBM_M07_122_01P

OIL TANK

© Rolls-Royce plc 2018. Use or disclosure is subject to the legend on the Notice to Holder page

Oil Pump and Pressure Filter

Purpose

Oil Pump – Supply pressurised oil to lubricate the engine bearings and gearboxes.

Pressure Filter - Remove contaminants from the feed oil.

Location

The oil pump and pressure filter assembly are located on the front face of the external gearbox.

Description

The oil pump assembly consists of a single pressure, ten vane type positive displacement pumps and a pressure filter and housing. There is also provision for 10 Magnetic Chip Detectors (MCDs).

A pressure relief valve, set to 600psi, protects the system from excessive pressures and acts as a bypass valve if the oil is cold or during severe system blockage.

If the system pressure exceeds 600psi the force of the pressure relief spring is overcome and the valve opens. This causes outlet oil to be fed back into the inlet thereby relieving the system pressure.

The pressure filter is installed on the oil pump assembly inside the filter housing. Access can be gained by removal of the filter cover. The filter is a 125-micron cleanable filter that can be cleaned a maximum of two times.

Integral to the filter housing is a Service Shut-Off Valve (SSOV) that prevents the loss of oil from the oil tank when the filter bowl is removed. The housing also contains a Static Anti-Leak Valve to prevent oil draining back to the EGB when the engine is not running.

If an oil pressure filter was not installed or not installed correctly during re-installation, then a filter bypass valve will be opened by oil pressure supplied from the pump allowing oil to flow to the engine oil system.

MCD Provision

The ten MCD positions are blanked during usual operation via plates bolted in position on the oil pump assembly. Removal of the blanking plates is required to enable the MCD housings to be installed prior to installation of the MCDs for troubleshooting purposes.

Adjacent to the MCD location the body of the oil pump is embossed with the source of the scavenge oil that the diagnostic MCD is monitoring.

© Rolls-Royce plc 2018. Use or disclosure is subject to the legend on the Notice to Holder page

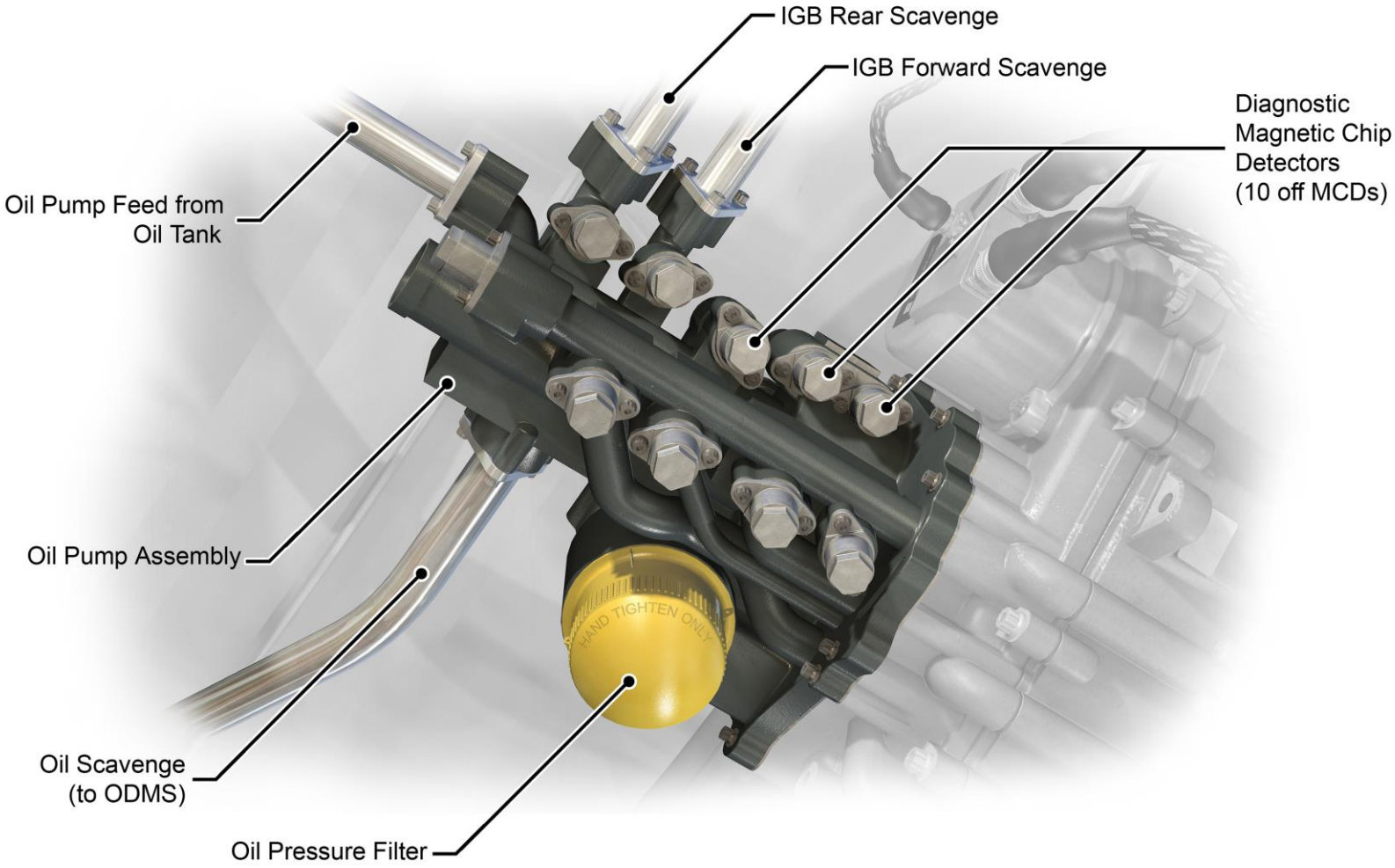

T1000 TEN_LBM_M07_123_01P

OIL PUMP AND PRESSURE FILTER

© Rolls-Royce plc 2018. Use or disclosure is subject to the legend on the Notice to Holder page

Engine Oil Heat Management System

Description

The function of the engine heat management system is to ensure the engine oil and fuel temperature are within specified limits for engine performance.

The main source of oil cooling is the Fuel Oil Heat Exchanger (FOHE). Two Engine Oil Surface Coolers (EOSCs) also provide additional cooling when needed.

Engine Oil Surface Coolers (EOSC)

Purpose

Provide additional cooling to the engine oil when required by dissipating heat from the oil to the fan air stream.

Location

Inner surface upper right side of the LP Compressor Case.

Description

The EOSCs are fabricated aluminium units with internal pressed fins. The coolers also have external fins to aid heat exchange between the oil and the fan air stream.

The coolers are arranged in parallel and provide a flow path to the oil between the oil pressure pump and the FOHE. The oil is allowed to flow through the EOSCs by an Oil Bypass Valve (OBV) in response to oil and fuel temperatures.

Oil Bypass Valve (OBV)

Purpose

Maintain the engine oil and fuel temperatures within defined limits by switching the EOSCs in and out of the oil system circuit.

Location

Right side of the LP Compressor Case, at the 3 o'clock position.

Description

The OBV is controlled by the EEC via a dual channel solenoid in response to oil and fuel temperatures. The OBV has two functions:

1. To maximise fuel temperature at the FOHE to prevent the fuel filter icing.
2. To minimise fuel heat loss during cruise to aid engine performance.

An LVDT is used by the EEC to monitor the position of the valve and will set a maintenance message, if the valve position is different to that commanded by the EEC.

Operation

The EEC receives oil temperature from a dual element Resistance Temperature Device (RTD) located upstream of the oil scavenge filter and fuel temperature RTD located downstream of the Hydromechanical Unit (HMU).

OBV Open

When the fuel temperature is less than 120°C or the oil temperature is less than 170°C the OBV solenoid will be energised, the valve will open and oil will flow through the OBV to bypass the EOSCs. At this point 90% of the oil will flow through the OBV.

OBV Closed

When the fuel temperature is more than 120°C or the oil temperature is more than 170°C the OBV solenoid is de-energised, the valve will close under spring pressure and oil will flow through the EOSCs to provide additional cooling. This is also the fail-safe position.

© Rolls-Royce plc 2018. Use or disclosure is subject to the legend on the Notice to Holder page

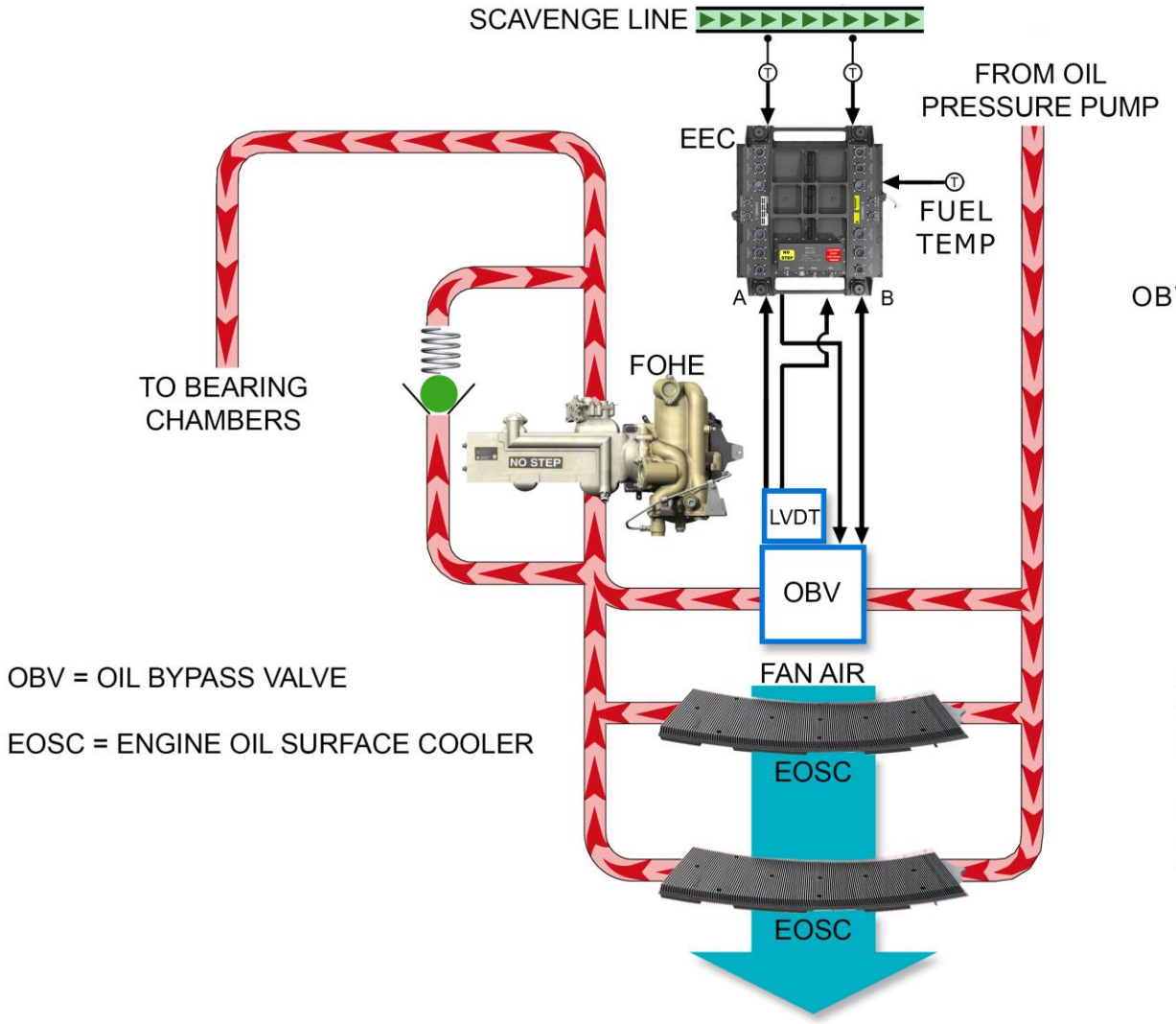

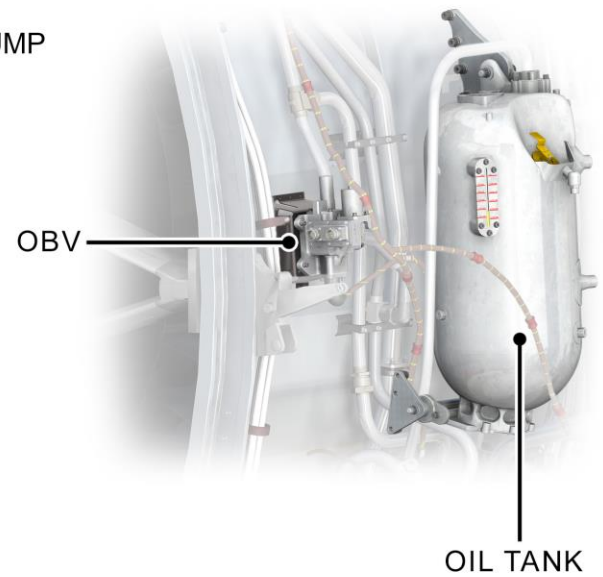

OBV = OIL BYPASS VALVE

EOSC = ENGINE OIL SURFACE COOLER

OBV - ENERGISED = OPEN = OIL BYPASSES EOSCs

OBV - DE-ENERGISED = CLOSED = OIL PASSES THROUGH EOSCs

T1000 TEN_LBM_M07_124_01P

ENGINE OIL HEAT MANAGEMENT SYSTEM

© Rolls-Royce plc 2018. Use or disclosure is subject to the legend on the Notice to Holder page

Engine Fuel / Oil Heat Management System

Fuel Oil Heat Exchanger (FOHE)

Purpose

The FOHE has two functions:

1. To reduce the temperature of the engine oil.
2. To prevent ice forming in the fuel.

Location

The FOHE is mounted horizontally below the oil tank on the right side of the LP Compressor Case.

Description

The FOHE is the main method of cooling the oil and heating the fuel and also provides a housing for the LP Fuel Filter. The FOHE consists of the following units:

- FOHE matrix
- Oil Matrix Bypass Valve.
- Fuel Matrix Bypass Valve
- Oil Differential Pressure Transducer
- LP Fuel Filter
- LP Fuel Filter Bypass Valve
- Fuel Filter Differential Pressure Transducer.

FOHE Matrix

The matrix is designed using a number of plates with fins attached. The space between the plates forms cavities through which fuel and oil flows in opposing directions. The fins form a supporting structure for the plates and also aid the transfer of heat between the oil and fuel. Once cooled the oil will flow to lubricate the required bearings and gears.

Bypass Valves

There are three bypass valves located on the FOHE as follows:

Oil Matrix Bypass Valve - During normal operation of the FOHE the oil is of a higher pressure than the fuel. If the oil pressure becomes more than the specified limit, a bypass valve will open allowing the oil to bypass two thirds of the matrix. This normally occurs when the engine oil is cold but may also occur if the matrix oil passages become blocked.

Fuel Matrix Bypass Valve – Should the fuel matrix passages become blocked a by-pass valve will open to maintain fuel flow to the Fuel Pump Assembly.

LP Fuel Filter Bypass Valve – If the differential pressure across the LP Fuel Filter becomes too high due to blockage or impending blockage a bypass valve will open to maintain fuel flow to the Fuel Pump Assembly.

Oil Differential Pressure Transducer

The oil pressure transducer will be discussed later in the section.

Combined LP Fuel Filter and Matrix Differential Pressure Transducer

The Combined LP Fuel Filter and Matrix Differential Pressure Transducer will be discussed in the Section 8 Fuel System and Control.

© Rolls-Royce plc 2018. Use or disclosure is subject to the legend on the Notice to Holder page

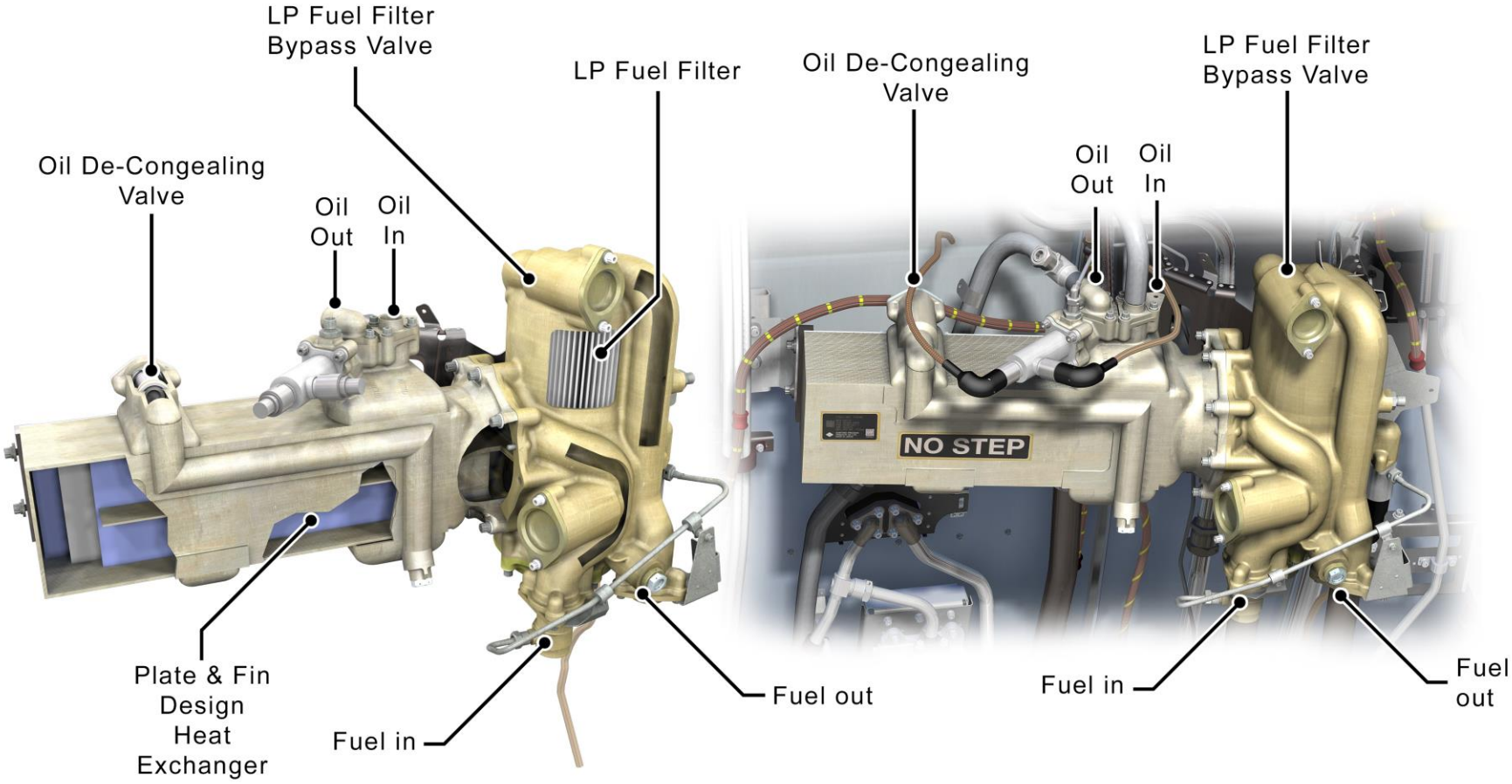

T1000 TEN_LBM_M07_125_01P

FUEL OIL HEAT EXCHANGER (FOHE)

© Rolls-Royce plc 2018. Use or disclosure is subject to the legend on the Notice to Holder page

Return Oil – The Oil Scavenge System

Introduction

The oil scavenge system enables the oil to be pumped out of the individual bearing housings and gearboxes, filtered and returned to the oil tank.

Scavenge System Units

The scavenge system consists of the following units:

- Ten Scavenge Pumps
- An Oil Debris Monitoring System
- Magnetic Chip Detectors

Scavenge Pumps

There are ten vane type scavenge pumps located in the oil pump assembly on the front face of the external gearbox. The scavenge pumps remove oil from the bearing housings and gearboxes passing it to the combined scavenge line before returning to the oil tank.

Oil Debris Monitoring System (ODMS)

The ODMS allows real time monitoring of oil system debris in the combined scavenge line before the oil returns to the oil tank the ODMS consists of:

- Oil Debris Sensor (ODS)
- Scavenge Filter and housing
- Scavenge Filter bypass valve
- Scavenge Filter Differential Pressure Transducer

Scavenge Filter

The disposable 15-micron scavenge filter is located in a housing attached to the base of the ODMS separator housing.

Scavenge Filter Bypass Valve

A scavenge filter bypass valve is mounted in the ODMS to ensure continuity of oil flow should the filter become totally blocked (See next page).

Scavenge Filter Differential Pressure Transducer

The Scavenge Filter Differential Pressure Transducer is located on the ODMS separator housing and measures the pressure drop across the scavenge filter. Channel B of the EEC reads the output signal from the transducer before indication to the flight deck of an impending filter blockage.

© Rolls-Royce plc 2018. Use or disclosure is subject to the legend on the Notice to Holder page

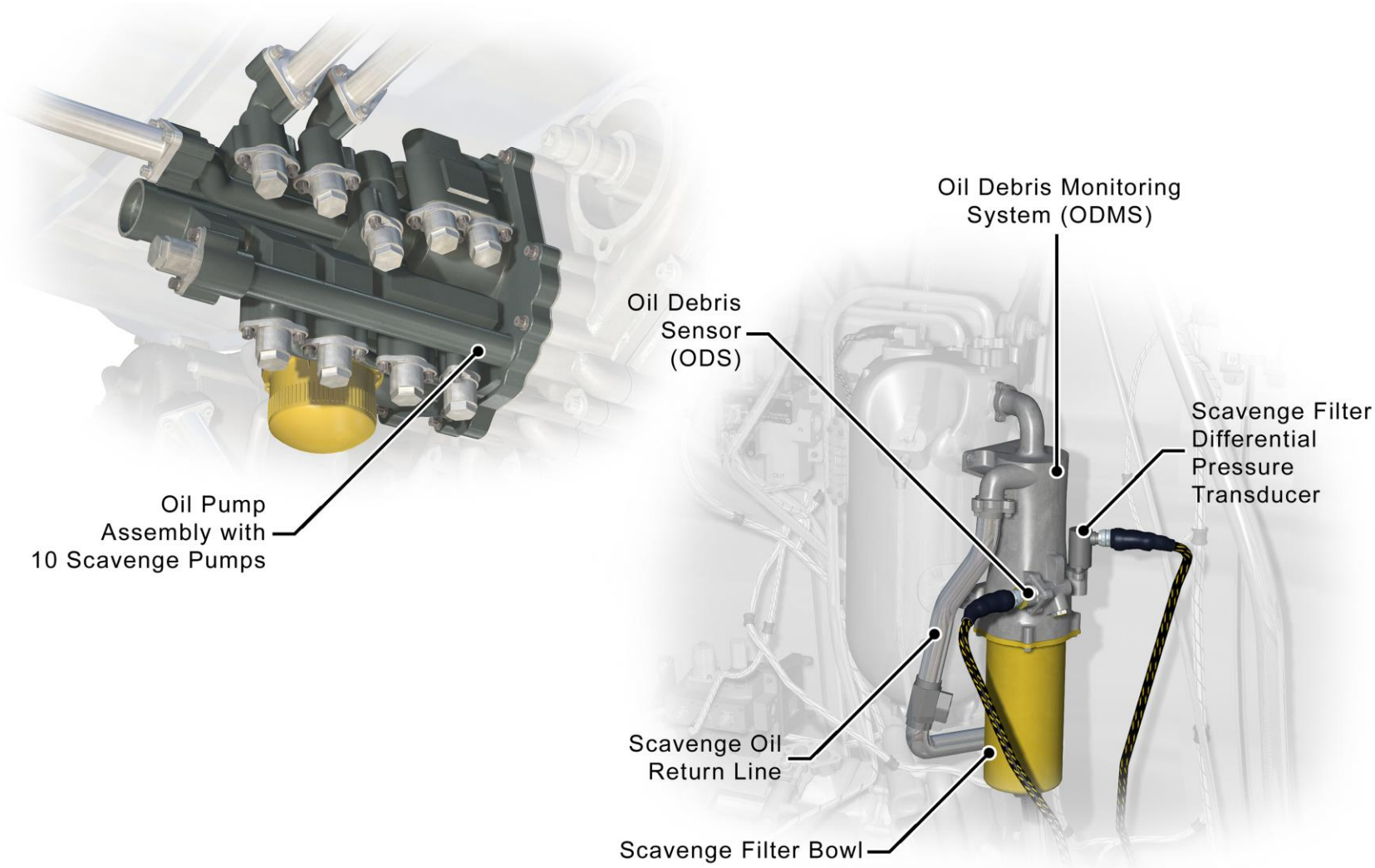

T1000 TEN_LBM_M07_126_01P

OIL SCAVENGE SYSTEM

© Rolls-Royce plc 2018. Use or disclosure is subject to the legend on the Notice to Holder page

Return Oil – The Oil Scavenge System

Oil Scavenge Filter Bypass Valve

Purpose.

To ensure continuity of oil flow in the event that the Scavenge Filter becomes blocked.

Location.

The Scavenge Filter Bypass Valve is located in the ODMS at the base of the Separator Housing.

Description

The valve consists of a diaphragm that, during usual operation, is held closed by the design of the diaphragm. Should the Oil Scavenge Filter become totally blocked with debris the pressure on the top of the diaphragm will become higher than the Scavenge Filter outlet pressure.

When the differential between the inlet and outlet pressure of the filter is greater than 20psid, the diaphragm will move down and allow the oil to flow to the oil tank.

© Rolls-Royce plc 2018. Use or disclosure is subject to the legend on the Notice to Holder page

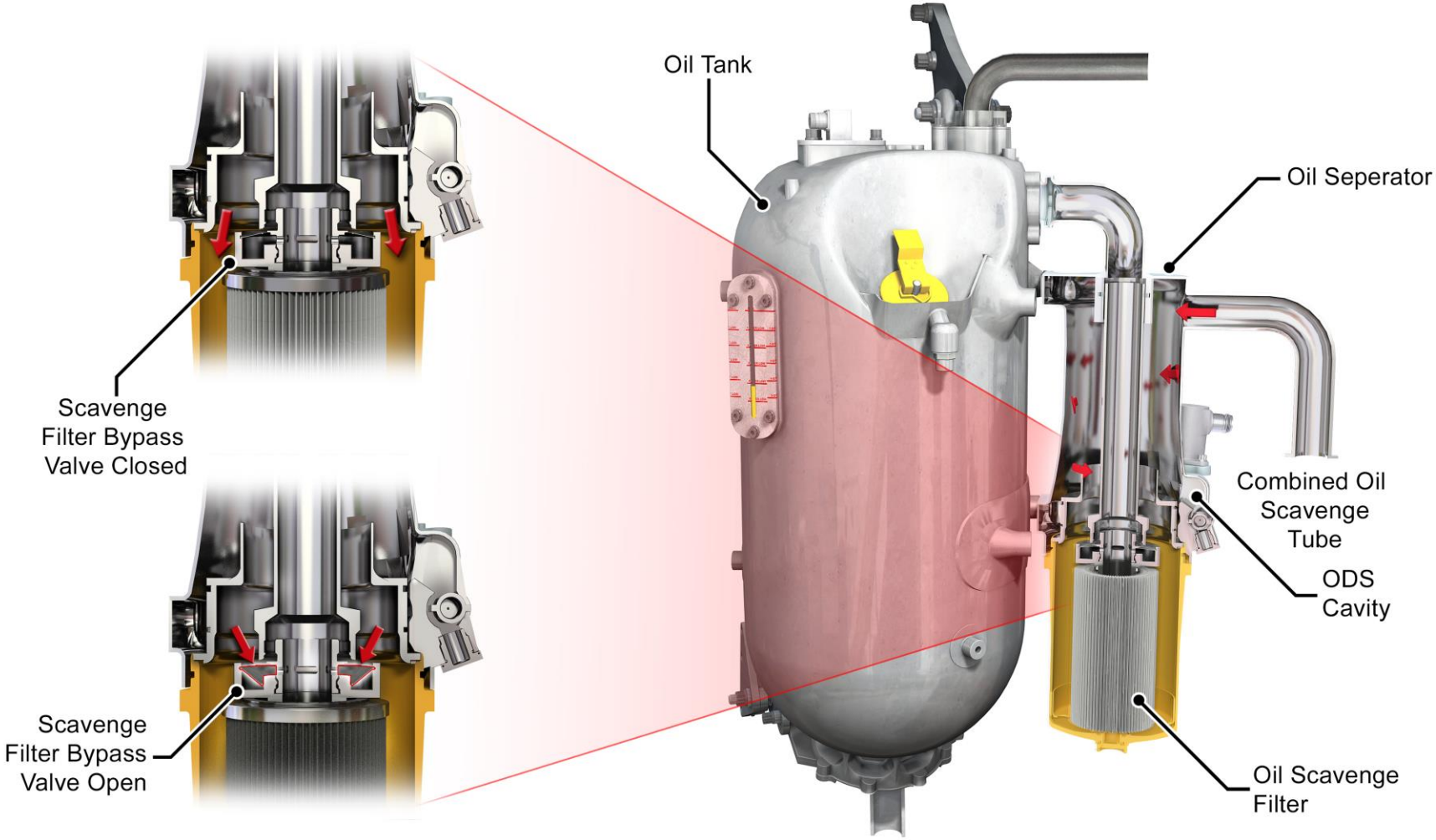

T1000 TEN_LBM_M07_127_01P

OIL SCAVENGE FILTER BYPASS VALVE

© Rolls-Royce plc 2018. Use or disclosure is subject to the legend on the Notice to Holder page

Oil Debris Monitoring System (ODMS)

Introduction

Monitoring of the debris within the oil system allows for early detection of impending failures of bearings, gears, splines and other oil lubricated components.

Location

The Oil Debris Monitoring System (ODMS) is located and attached to the right side of the oil tank. The system also includes other units that are part of this system and attached to the right side of the fancase.

Description

The ODMS consists of the following units:

- Separator Housing.
- Oil debris sensor (ODS).
- Oil debris Signal Conditioner (ODSC).
- Engine Electronic Controller (EEC).
- Engine Monitoring Unit (EMU).

Operation

Oil enters the ODMS from the Scavenge Pumps via a Combined Oil Scavenge Line on the right side of the unit and travels through the Separator Housing. The Separator Housing induces a swirl into the oil flow allowing debris within the oil to be centrifuged into a cavity where it will be analysed by the Oil Debris Sensor (ODS).

Having passed through the Separator Housing the oil flows over the bypass valve, through the scavenge filter and into the oil tank.

Oil Debris Sensor (ODS)

The ODS is a passive, magnetic, inductive sensor that provides the EEC with a signal that is proportional to the size of the debris.

Oil Debris Signal Conditioner (ODSC)

A signal from the ODS is received by the Oil Debris Signal Conditioner. The signal is then amplified, filtered and compared to pre-determined threshold levels before being passed to the EEC.

- A 10-millisecond signal is output to the EEC if a small' particle is detected.
- A 20-millisecond signal is output to the EEC if a 'large' particle is detected.

Engine Electronic Controller

Channel A provides the 15V DC required to power the ODSC and also counts the number of small and large particles detected depending on size, quantity and rate of occurrence. Depending on the amount of debris detected the EEC will set an EICAS status message as required.

Engine Monitoring Unit (EMU)

The EMU will receive ODS information from the EEC and will use the information as part of the Engine Health Monitoring suite of software to aid detection and minimize customer disruption.

© Rolls-Royce plc 2018. Use or disclosure is subject to the legend on the Notice to Holder page

OIL DEBRIS MONITORING SYSTEM (ODMS)

© Rolls-Royce plc 2018. Use or disclosure is subject to the legend on the Notice to Holder page

Magnetic Chip Detectors (MCDs) and Oil Debris Sensor (ODS)

There are ten screw-in Magnetic Chip Detectors (MCD) and one Oil Debris Sensor (ODS) installed in the oil scavenge system to allow monitoring of the oil for debris The ten MCDs collect debris from the bearing housings and gearboxes. They are only installed for diagnostic purposes and are identified as follows:

- The Front Bearing Housing (FBH).
- Internal Gearbox Front (IGBF).
- Internal Gearbox Rear (IGBR).
- HP Turbine (HPT).
- IP Turbine (IPT).
- Tail bearing Housing (TBH).
- Breather Scavenge Element (BSE).
- Intermediate Gearbox – This is also known as the Step-a-side-Gearbox (SAGB).
- Lower Bevel Box (LBB).
- External Gearbox (EGB).

Location

The Oil Debris Sensor (ODS) is installed in a self-closing valve within the separator housing that is part of the ODMS.

There are ten MCD positions on the oil pump assembly.

Note: During usual engine running only the ODS will be installed. If debris is found on the ODS then the diagnostic MCDs may be installed on the oil pump to isolate the source of the debris.

Oil Debris Sensor (ODS)

Before entering the scavenge filter the return oil passes over the ODS. The ODS is located in the separator housing where any ferromagnetic particles are directed onto the ODS for indication to the flightdeck and capture in readiness for further analysis.

Debris particles collected by the ODS disturb the magnetic flux which generates a voltage that is sensed by the signal conditioner.

The output signal from the signal conditioner to the EEC is proportional to the size of the debris which is then used to provide the relevant EICAS message to the flightdeck.

Diagnostic Magnetic Chip Detectors (MCDs)

Each screw-in MCD assembly consists of a housing and Magnetic Chip Detector, which has a magnet at its end. When the MCD assembly is installed the magnetic end is located into the scavenge oil flow so that any ferrous debris attaches itself to the magnet.

To prevent oil leakage when an MCD is removed the MCD housing has a self-closing valve.

Any non-ferromagnetic material is directed to a separate pocket within the separator housing where it can be accessed by removal of a threaded blanking plug.

© Rolls-Royce plc 2018. Use or disclosure is subject to the legend on the Notice to Holder page

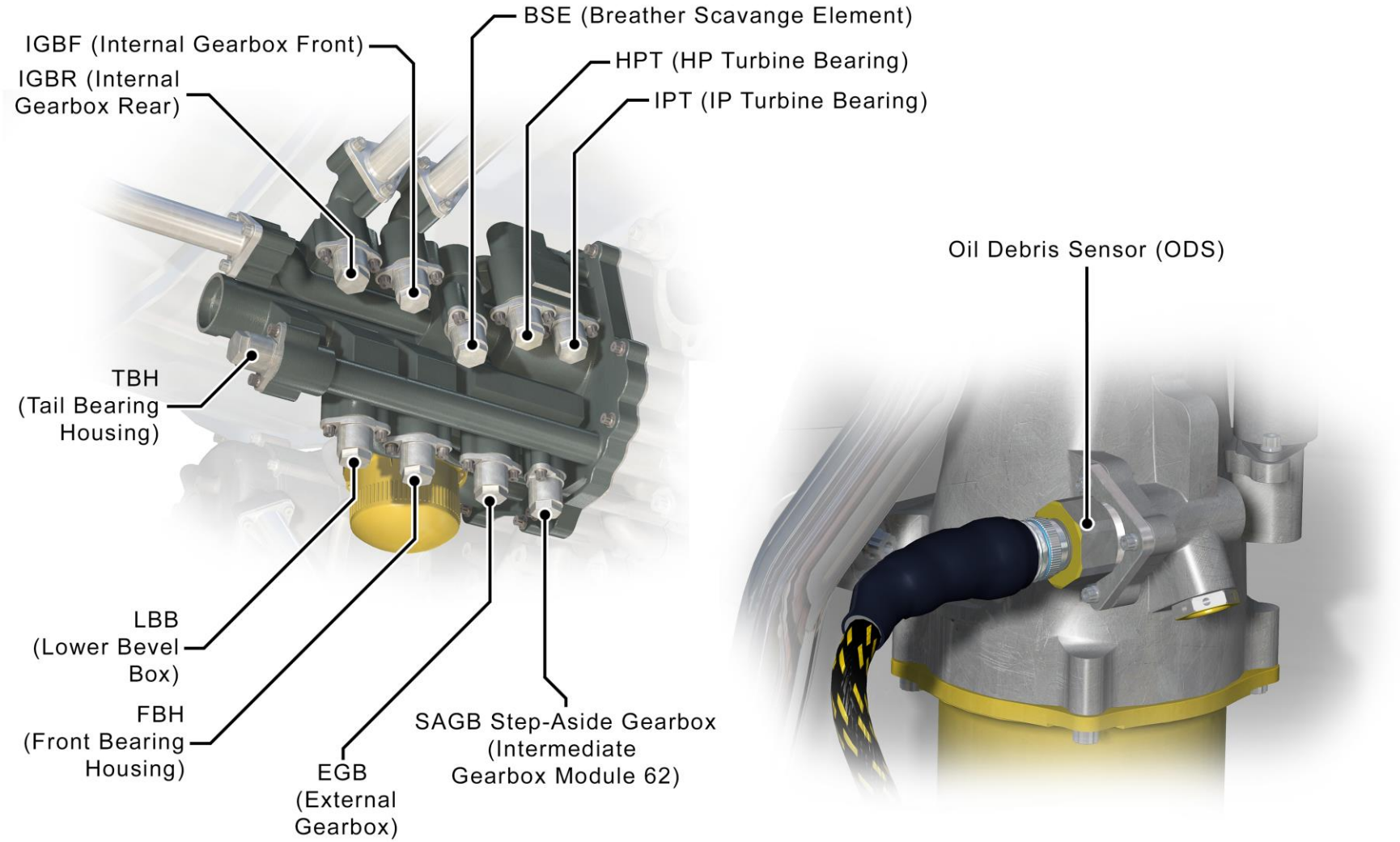

DIAGNOSTIC MCD AND OIL DEBRIS SENSOR

© Rolls-Royce plc 2018. Use or disclosure is subject to the legend on the Notice to Holder page

Oil Ventilation System

Purpose

To separate the oil from the bearing chamber sealing air.

Location

The ventilation system consists of two main units:

1. A de-aerator inside the oil tank.
2. A Centrifugal Breather mounted to the front face of the external gearbox.

Description

A controlled amount of air from the compressors (HP3 at low speed and IP8 at high speed) is allowed to continuously flow through the bearing chambers to seal the chamber and prevent oil loss.

The air entering the chamber must then be removed and generally the scavenge pumps have the capacity to remove the air from most of the chambers. To provide a greater airflow through the bearing chambers a vent system is used.

As the airflows through the bearing chambers large quantities of oil is passed into the air.

Oil Tank De-aerator

The function of the oil tank de-aerator is to remove the air from the oil entering the oil tank. The de-aerator is a cyclone type separator that causes the sides of the tank to become wet so acting as a heat sink. As the oil strikes the tank walls the air from the top of the tank passes to the centrifugal breather and the oil drops into the tank.

Centrifugal Breather

The centrifugal breather has a rotor that contains retimet segments and is driven by the external gearbox.

Aerated oil from the bearing chamber vent system and the oil tank is delivered to the centrifugal breather. The aerated oil tries to pass through the retimet segments but is centrifuged out and scavenged back to the oil tank by a dedicated scavenge pump element.

The air can pass through the retimet segments into the hollow rotor and is vented overboard.

© Rolls-Royce plc 2018. Use or disclosure is subject to the legend on the Notice to Holder page

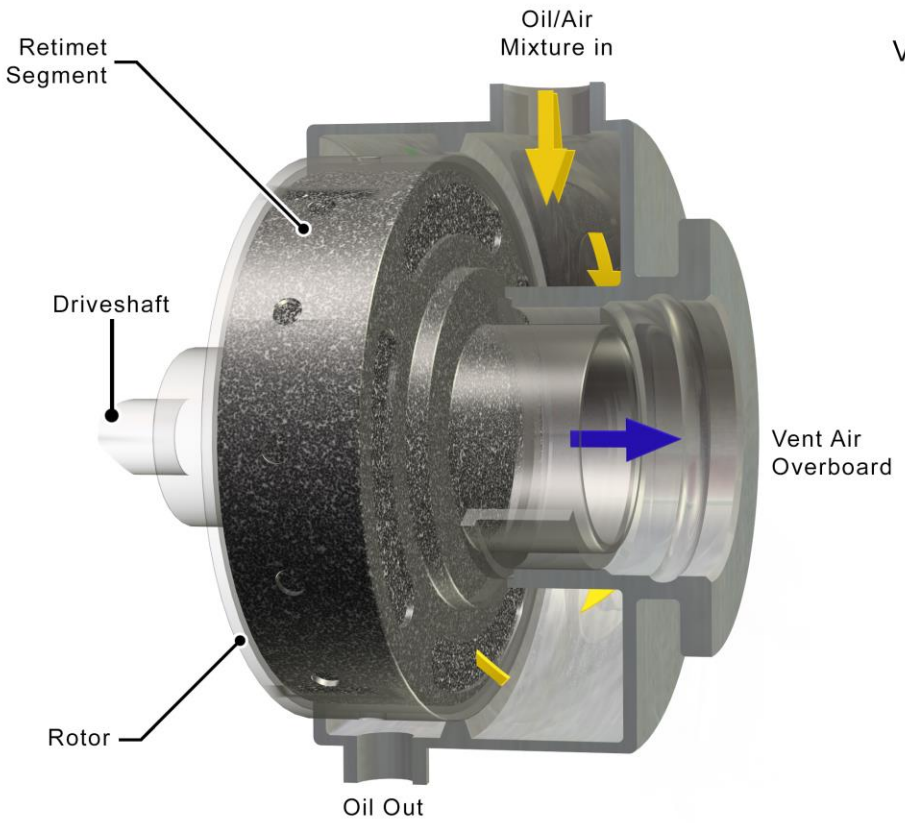

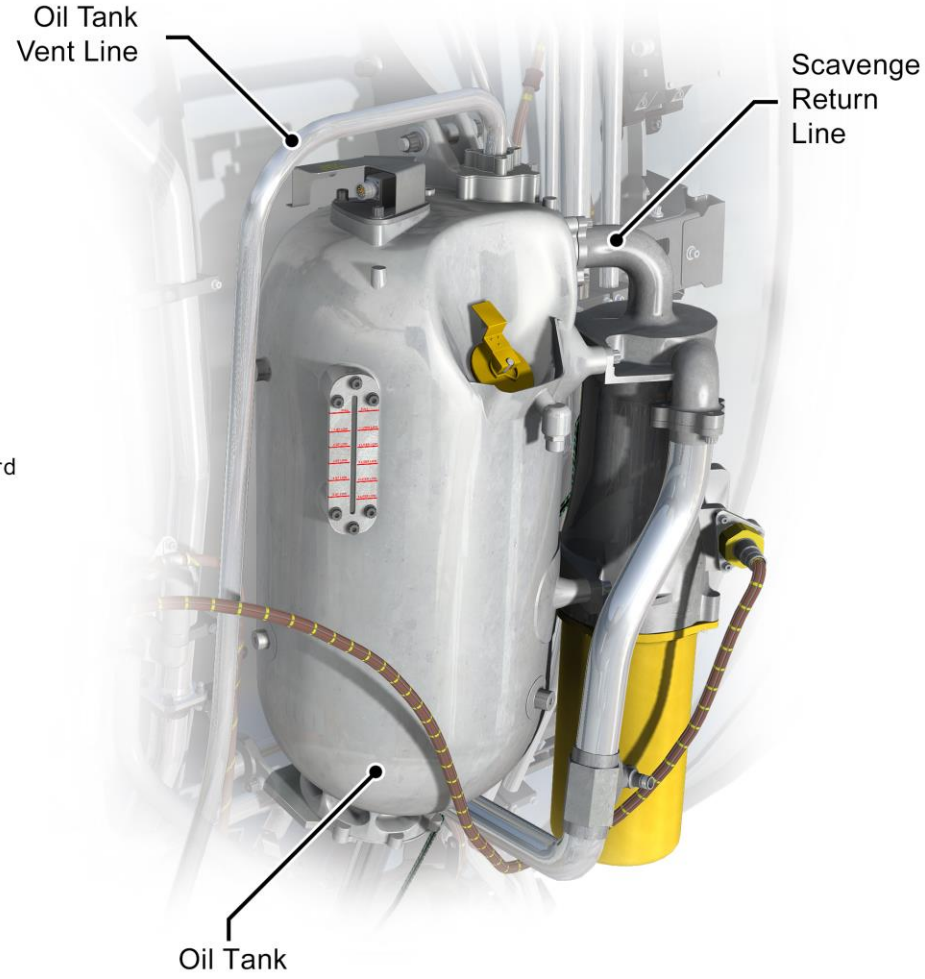

T1000 TEN_LBM_M07_130_01P

OIL VENTILATION SYSTEM

© Rolls-Royce plc 2018. Use or disclosure is subject to the legend on the Notice to Holder page

Oil Indications

Oil Quantity Transmitter

Purpose

To provide a flight deck indication of oil quantity within the engine oil tank.

Location

The Oil Quantity Transmitter is located within the oil tank

Description

The Quantity Transmitter is a potentiometer device with changes in electrical resistance indicating different oil levels. The transmitter consists of a permanent magnetic float and a number of reed switches in a ladder configuration forming a series-parallel loop.

As the float moves up and down with the oil level in the tank the switches are magnetically closed thereby changing the resistance.

The Main Engine Data Concentrator unit (MEDC) provides a constant current to the transmitter such that a change in resistance results in a change in the output voltage across the resistance stack. The output voltage is measured by the MEDC that conditions the signal and transmits the oil quantity indication onto the Common Data Network (CDN) in US Quarts for use by the Aircraft Systems.

The MEDC also monitors the Quantity Transmitter signal to ensure the signal is within range. Any faults detected results in the oil quantity display going blank and a status message being generated on the EICAS display.

© Rolls-Royce plc 2018. Use or disclosure is subject to the legend on the Notice to Holder page

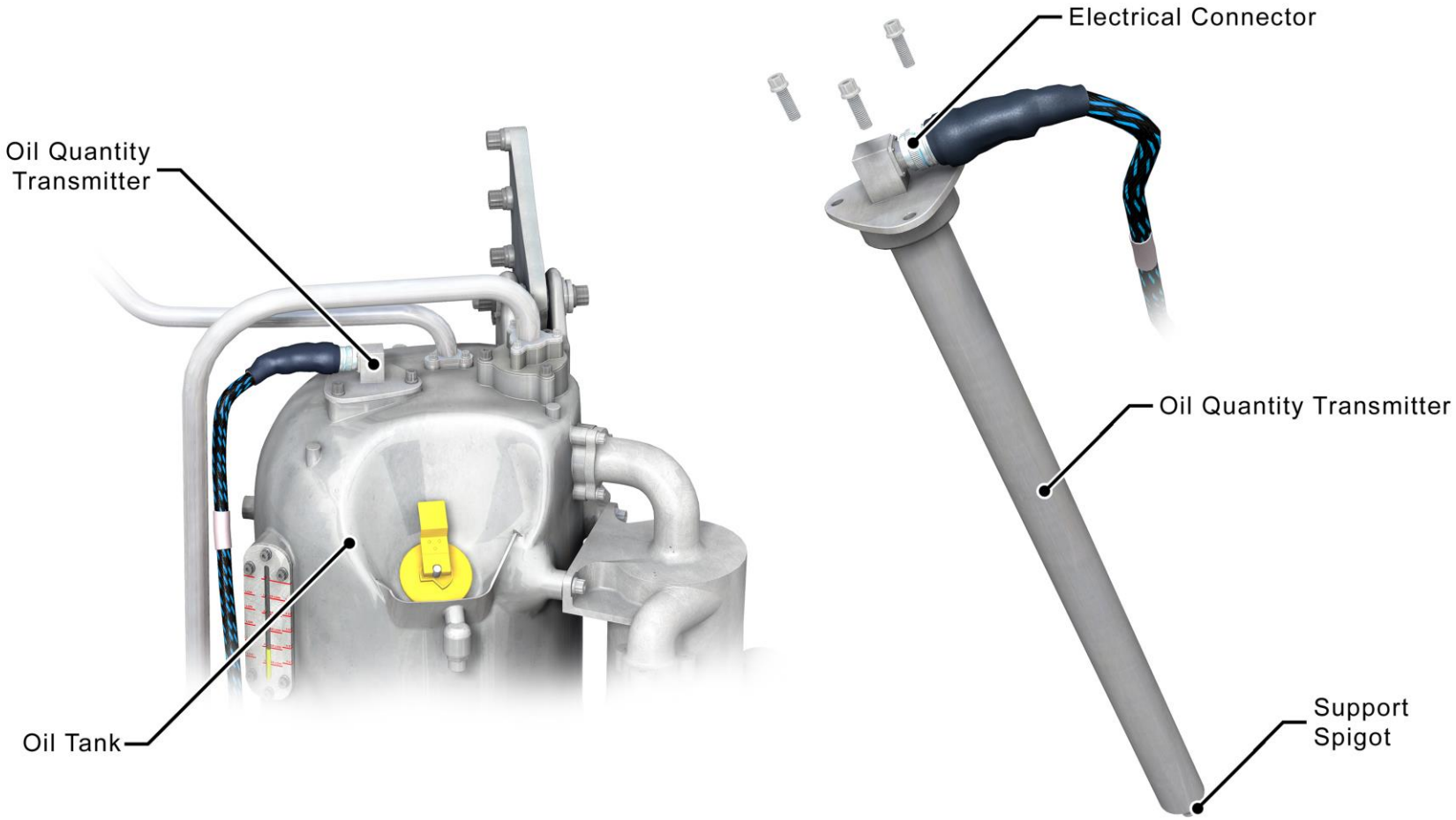

T1000 TEN_LBM_M07_131_01P

OIL QUANTITY TRANSMITTER

© Rolls-Royce plc 2018. Use or disclosure is subject to the legend on the Notice to Holder page

Oil Indications

Oil Pressure Transducer

Purpose

Provide an indication of oil flow in the engine, to the EEC and Flight deck.

Location

The Oil Pressure Transducer is located on the FOHE.

Description

The oil pressure transducer assembly consists of two ratiometric sensing elements supplied by the same oil pressures. One element is connected to channel A and the other to channel B of the EEC. The transducer measures a differential pressure between the main oil pressure feed line and the internal gearbox scavenge pressure.

Measuring a pressure differential in this way ensures oil is flowing to the location bearings inside the internal gearbox.

The EEC conditions and filters the signal to remove pump ripple effects and sends a smooth oil pressure signal to the flight deck via the CDN.

Oil Temperature Sensor

Purpose

Provide an indication of engine oil temperature to the EEC and Flight deck.

Location

A single dual element assembly is located in the scavenge return line prior to the ODMS.

Description

The temperature sensor is a dual channel Resistance Temperature Device (RTD) giving oil temperature indication to both channels of the EEC before processing the signal for the flight deck display via the CDN.

As the temperature of the oil increases so does the resistance value within the sensor. The indication to the EEC is in degrees Kelvin and the EEC converts this to degrees Celsius for the flight deck.

Oil temperature is also used for starting and fuel scheduling during acceleration.

The EEC continuously monitors the outputs of the RTDs and in the event of a sensor failure the EEC selects the remaining channel.

© Rolls-Royce plc 2018. Use or disclosure is subject to the legend on the Notice to Holder page

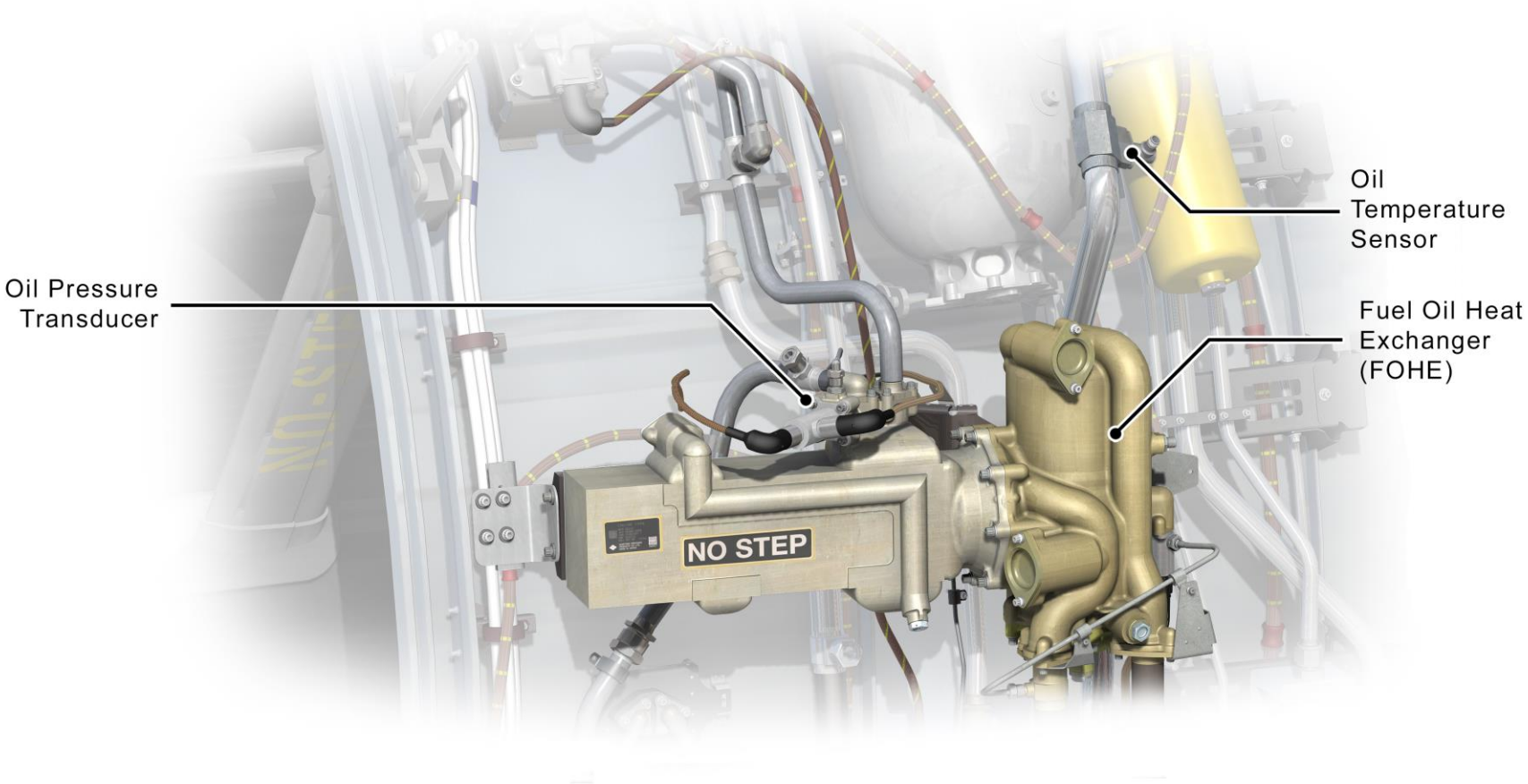

T1000 TEN_LBM_M07_132_01P

OIL PRESSURE TRANSDUCER AND OIL TEMPERATURE SENSOR

© Rolls-Royce plc 2018. Use or disclosure is subject to the legend on the Notice to Holder page

Oil Indications

Scavenge Oil Filter Differential Pressure Transducer

Purpose

To provide a flight deck indication of impending blockage of the scavenge filter.

Location

The scavenge filter differential pressure transducer is mounted on the Oil Debris Monitoring System (ODMS).

Description

The filter differential pressure transducer is a single ratiometric device designed to measure the pressure drop across the filter inlet and outlet.

As the filter becomes partially clogged with debris the pressure drop increases until it reaches a pre-determined threshold of 13psid. At this point the change in resistance of the sensing element is sensed by channel B of the EEC and a status message will be sent to the flight deck.

© Rolls-Royce plc 2018. Use or disclosure is subject to the legend on the Notice to Holder page

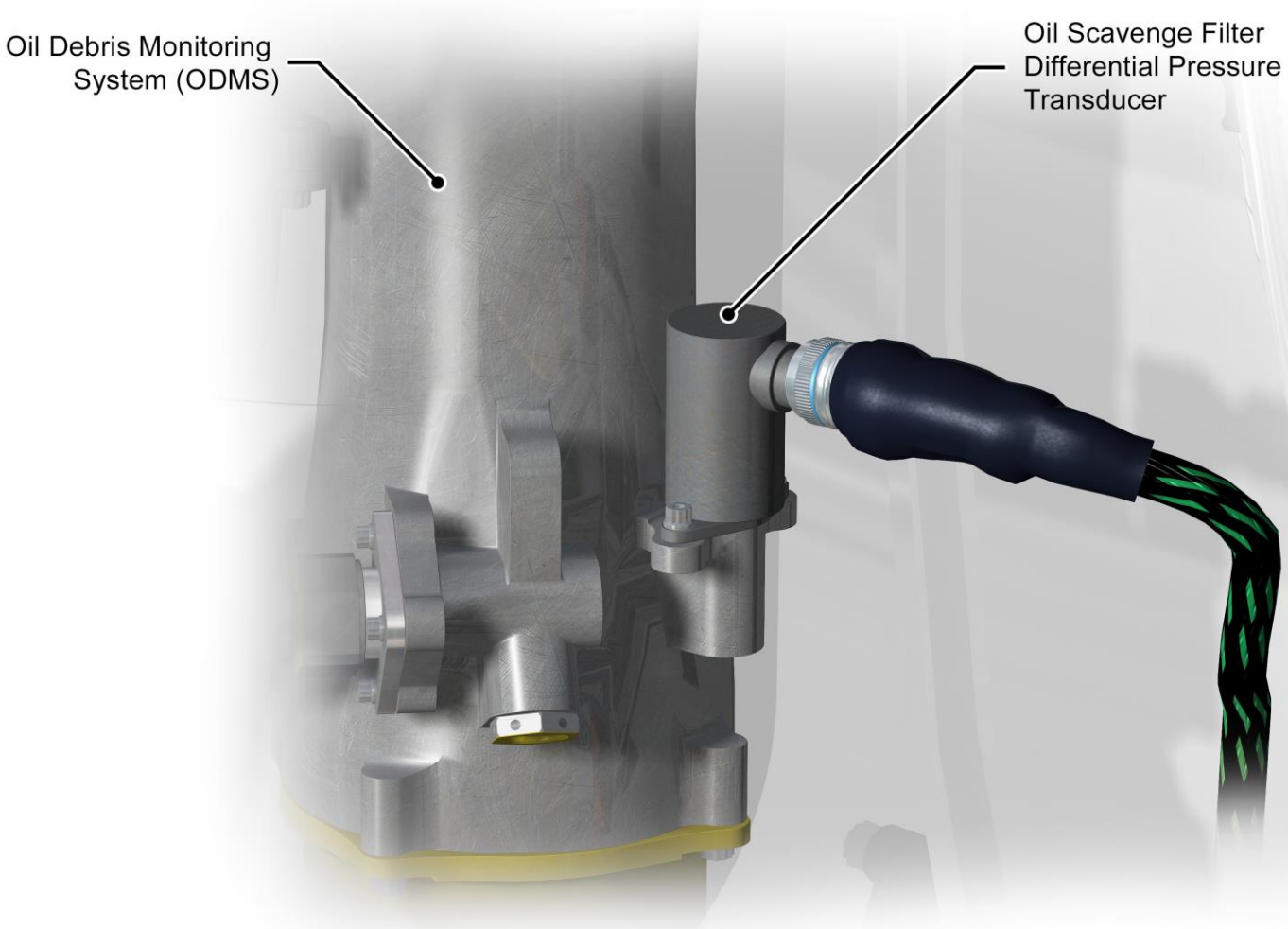

T1000 TEN_LBM_M07_133_01P

SCAVENGE OIL FILTER DIFFERENTIAL PRESSURE TRANSDUCER

© Rolls-Royce plc 2018. Use or disclosure is subject to the legend on the Notice to Holder page

Maintenance Practices

Oil System Operating Limits

The oil system operating limits can be found in the relevant Crew Operating Manuals and Chapter 2 of the Trent 1000 Engine Operating Instructions (EOIs). When carrying out any engine running the official documents should be used at all times.

Oil Pressure Limits

The oil pressure limits apply to all engine speeds between Ground Idle and Take-off and are set against an N2 speed.

The EICAS indication will change to AMBER with an amber box around it when the oil pressure is between 30 and 90psid when the engine speed is between 74 and 100%N2. As shown in the diagram opposite.

The EICAS indication will change to RED with a red box around it when the oil pressure is 30psid or below when the engine speed is between 50 and 100%N2.

Oil Temperature Limits

The maximum oil temperature is +196 deg C.

The minimum oil temperature for starting is -40 deg C.

The minimum oil temperature before accelerating to high power is +40 deg C.

Oil Specifications

The approved oils for the Trent 1000 TEN are:

- Aeroshell Ascender
- Eastman Turbo Oil 2197.
- BP Turbo Oil 2197
- Mobil Jet 387

Note: Mixing of approved oils is permissible if operationally essential.

© Rolls-Royce plc 2018. Use or disclosure is subject to the legend on the Notice to Holder page

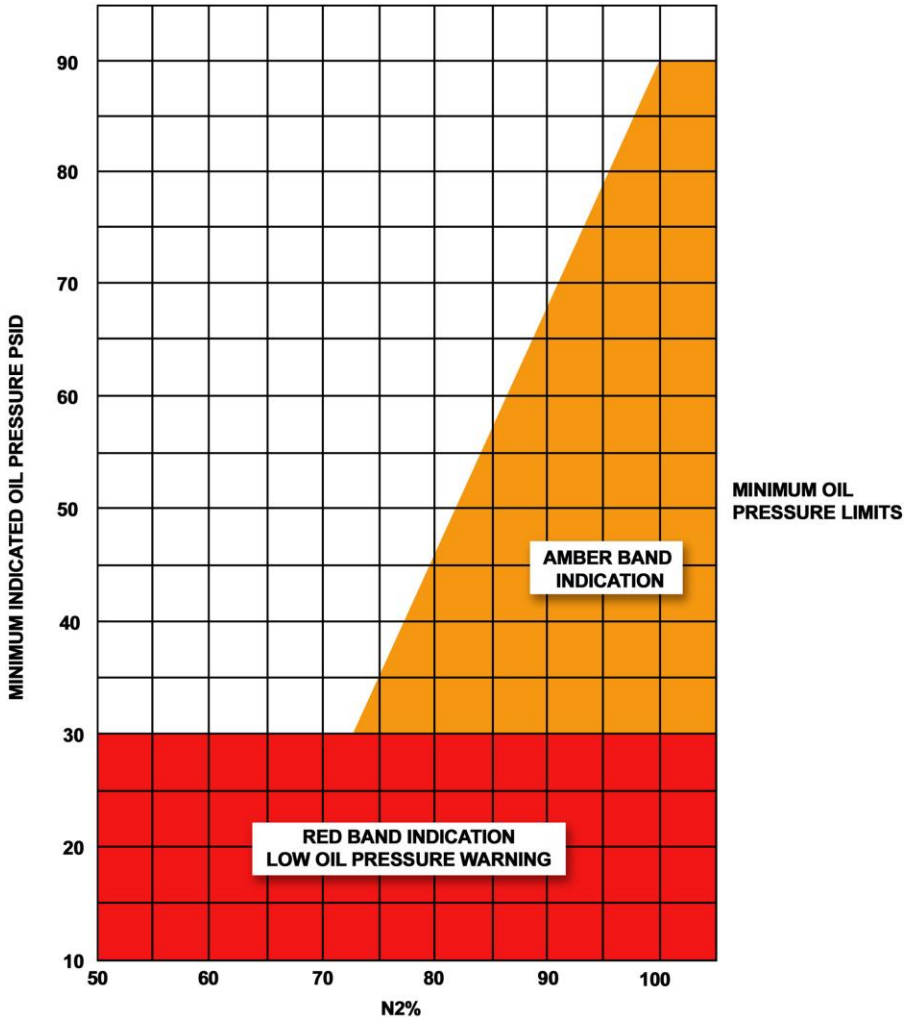

T1000 TEN_LBM_M07_134_01P

OIL SYSTEM OPERATING LIMITS

© Rolls-Royce plc 2018. Use or disclosure is subject to the legend on the Notice to Holder page

Maintenance Practices

Oil System Servicing

The following is a brief description of these tasks. Refer to the AMM for the full description and the relevant OMSD for the correct use of any specialised tooling.

AMM Task B787-A-12-13-01-00C-200A-A

WARNING: DO NOT LET HOT OIL GET ON YOU. PUT ON CLOTHES, GOGGLES, AND OTHER EQUIPMENT FOR PROTECTION, OR LET THE ENGINE BECOME COOL, HOT OIL CAN BURN YOU.

WARNING: AFTER ENGINE SHUTDOWN, MAKE SURE THE ENGINE COOLS FOR FIVE MINUTES BEFORE YOU REMOVE THE OIL CAP. THIS WILL LET TANK PRESSURE BLEED OFF. HOT OIL FROM THE TANK CAN CAUSE BURNS AND OTHER INJURIES TO PERSONS.

1. Wait a minimum of 10 minutes after engine shutdown to allow the oil level to become stable.
2. Open the oil tank access door.
3. Do a check of the oil tank sight glass to find the oil level.
4. If the oil level is below the FULL mark do one of the following:
   - If the engine has been stopped for LESS THAN 6 hours use the gravity fill procedure to fill the oil tank to the FULL mark.
   - If the engine has been stopped for MORE THAN 6 hours and the oil level is below the FULL mark but above the 5 quarts level then:
     - DO NOT fill the oil tank with oil.
     - Start the engine and operate at Idle for 5 minutes.
     - Shutdown the engine.
     - Wait 10 minutes before carrying out a check of the oil level to allow the oil level to become stable.
     - If the oil level is below the FULL mark use the gravity fill procedure to fill the oil tank to the FULL mark.
   - If the engine has been stopped for MORE THAN 6 hours and the oil level is below the 5 Quarts level then:
     - DO NOT fill the oil tank with oil.
     - Drain the External Gearbox (AMM Task B787-A-12-22-01-07C-228A-A).
     - Use the gravity fill procedure to fill the oil tank to the FULL mark.
     - Start the engine and operate at Idle for 5 minutes.
     - Shutdown the engine.
     - Wait 10 minutes before carrying out a check of the oil level to allow the oil level to become stable.
     - If the oil level is below the FULL mark use the gravity fill procedure to fill the oil tank to the FULL mark.

Note: It is recommended that the same oil be used every time that the engine oil system is filled. If there is no oil of the same type available, use one of the other oils from the approved list found in Section 70 of the AMM or the EOIs.

© Rolls-Royce plc 2018. Use or disclosure is subject to the legend on the Notice to Holder page

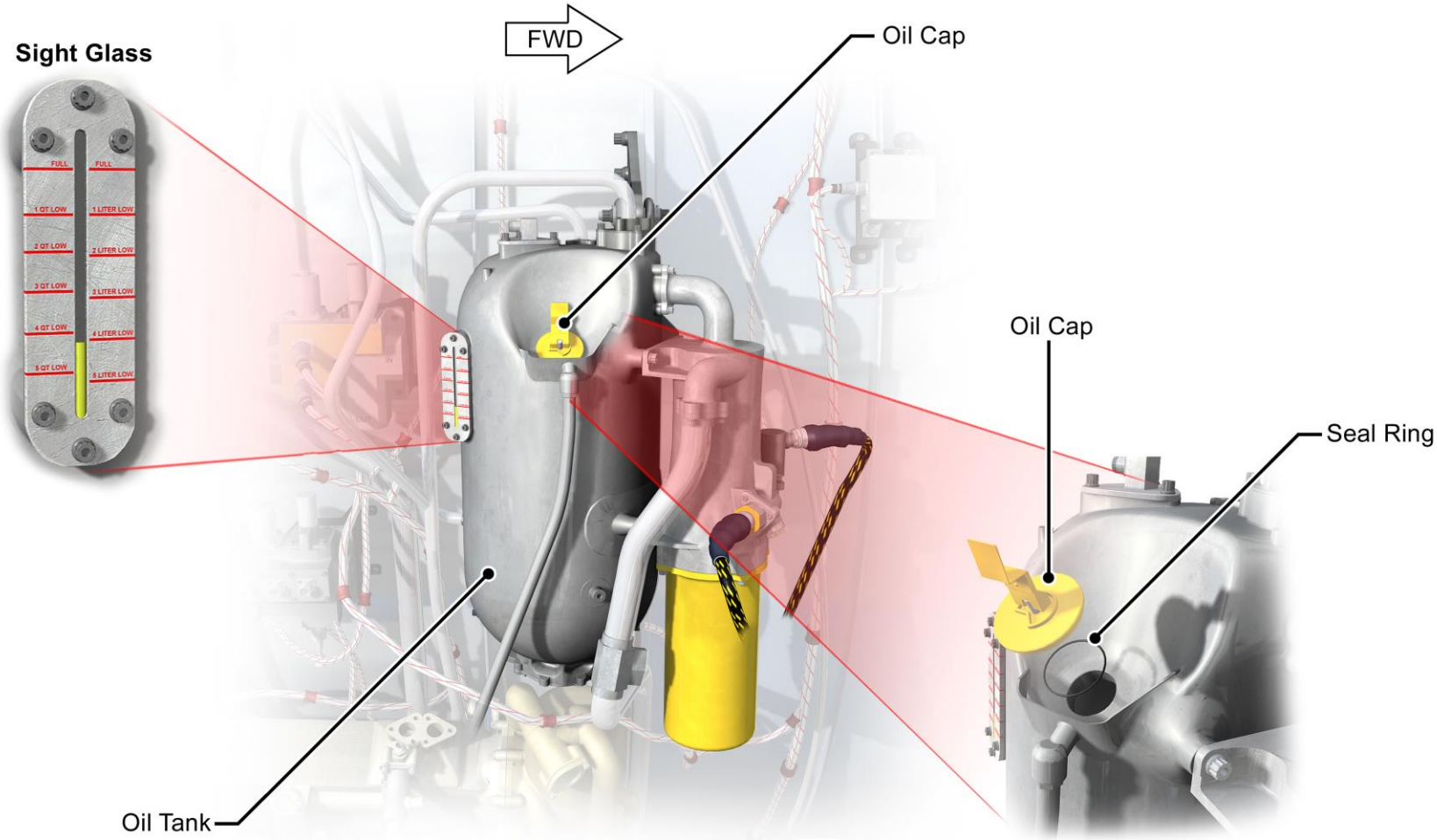

T1000 TEN_LBM_M07_135_01P

OIL SYSTEM SERVICING

© Rolls-Royce plc 2018. Use or disclosure is subject to the legend on the Notice to Holder page

Maintenance Practices

MCD and ODS Inspection

The following is a brief description of these tasks. Refer to the AMM for the full description and the relevant OMSD for the correct use of any specialised tooling.

MCD Inspection

AMM Task B787-A-R79-00-00-16A-280B-A

ODS Inspection

AMM Task B787-A-R79-00 00-05A-280B-A

1. Remove the ODS / MCD and remove the oil by cleaning using a clean container and kerosene.
2. Inspect the ODS / MCD using an inspection lamp and 10x magnifying lens. If debris is found on the ODS which is above the permitted limits install the MCDs to the oil pump assembly to identify the source of contamination and to help with fault isolation.

Note: MCDs are not installed for normal service as the debris catch on the ODS may be reduced. If the MCDs require fitment, install their housing and run the engine at idle power for 5 minutes and then carry out two 1.5 minute dry motor runs.

3. Keep a record of any ODS or MCD inspections made recording the Engine Serial Number, where the material was found and the date the material was collected.

Types of Debris

There are four (4) main types of debris that may be found. They are:

Swarf

Swarf is unwanted material that can stay in the engine when it is assembled. The swarf comes from machine operations when components are made. When this material is broken it can look the same as gear or steel seal material. Examine carefully to ensure it is different from other contamination.

Magnetic Fines

Magnetic fines are very small steel particles, which show as a black sludge on the ODS or MCD. Fines can be from gears, bearings or engine wear.

Note: Fines from gears are rougher than other types of fines.

Metallic Flakes

Metallic flakes usually come from ball bearings, roller bearings and gear teeth. They are irregular in shape and must be examined to find their origin.

Ball bearing and their track flakes are usually circular with radial cracks, if clean, will have one side brighter than other flakes and may have scratches that go across each other.

Roller bearing and their track flakes are usually rectangular. When clean will have one side brighter than other flakes and may have scratches that go across each other.

Gear teeth flakes are shiny, irregular in shape, thicker and not as bright as ball or roller bearing flakes.

Chips and Gear Tooth Fragments

Chips are very thick flakes or pieces of metal that usually have one smooth machined surface.

Fragments are corner pieces of gear teeth and may show that the gears are mis-aligned.

© Rolls-Royce plc 2018. Use or disclosure is subject to the legend on the Notice to Holder page

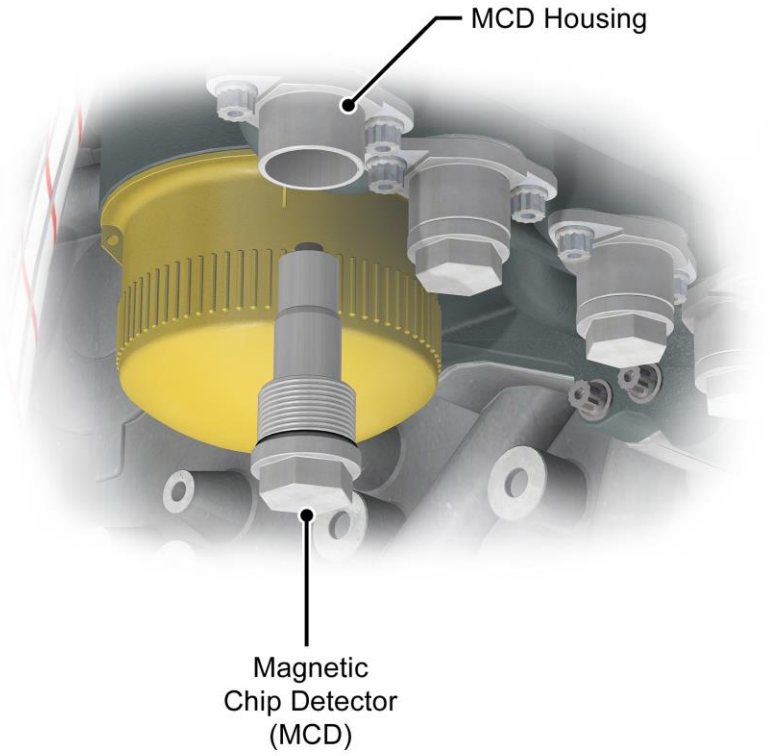

Swarf

Chip

Magnetic Fines

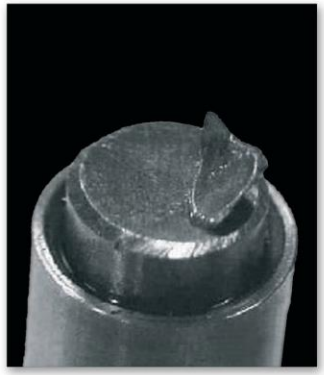
Gear Teeth

T1000 TEN_LBM_M07_136_01P

MCD AND ODS INSPECTION

© Rolls-Royce plc 2018. Use or disclosure is subject to the legend on the Notice to Holder page

Maintenance Practices.

Oil Scavenge Filter Removal and Replacement

The following is a brief description of these tasks. Refer to the AMM for the full description and the relevant OMSD for the correct use of any specialised tooling.

WARNING: BE CAREFUL WHEN YOU DO WORK ON THE ENGINE PARTS AFTER THE ENGINE IS STOPPED. THE ENGINE PARTS CAN STAY HOT FOR ALMOST ONE HOUR. DO NOT TOUCH HOT PARTS WITHOUT APPLICABLE GLOVES. HOT PARTS CAN CAUSE INJURY TO PERSONNEL.

CAUTION: DO NOT PUT THE USED OIL BACK INTO THE ENGINE OIL SYSTEM. USED OIL CAN CAUSE CONTAMINATION, AND DAMAGE TO THE OIL SYSTEM.

Drain the Oil Scavenge Filter Housing (AMM TASK B787-A-12-22-01-03C-228A-A).

1. Place a clean 1 US Gal (3.81l) oil resistant container below the scavenge filter housing drain plug.
2. Remove the drain plug and let the oil drain into the container. Keep the oil as it may be necessary to do a check for contamination.
3. Discard the seal from the drain plug.
4. Install a new seal ring to the drain plug (AMM TASK B787-A-R70-02-01-00A-030A-A).
5. Lubricate the drain plug (AMM TASK B787-A-R70-51-00-00A-950A-A).
6. Install the drain plug to the oil scavenge filter housing, torque tighten to the values in the AMM and safety with safety cable.

Oil Scavenge Filter Removal
AMM Task B787-A-R79-22-16-00B-520A-A

7. Hold the scavenge filter housing and remove the bolts.
8. Remove the filter housing and scavenge filter element from the oil debris separator.
9. If necessary inspect the scavenge filter. (AMM TASK B787-A-R79-00-00-04A-280B-A).
10. Discard the scavenge filter.
11. Discard the Filter Housing Seal Ring.

Oil Scavenge Filter Replacement
AMM Task B787-A-R79-22-16-00B-720A-A

1. Ensure the filter housing has been cleaned and examined and is free from unwanted debris.
2. Install a new oil scavenge filter in the filter housing.
3. Install a new seal ring to the filter housing (AMM TASK B787-A-R70-02-01-00A-030A-A).
4. Lubricate the four (4) filter housing bolts (AMM TASK B787-A-R70-51-00-00A-950A-A).
5. Install the filter housing to the oil separator and loosely attach with the four (4) lubricated bolts.
6. Tighten the bolts using a torque wrench to the values stated in the AMM.
7. Replenish the engine oil as required (AMM TASK B787-A-12-13-01-00C-200A-A).

© Rolls-Royce plc 2018. Use or disclosure is subject to the legend on the Notice to Holder page

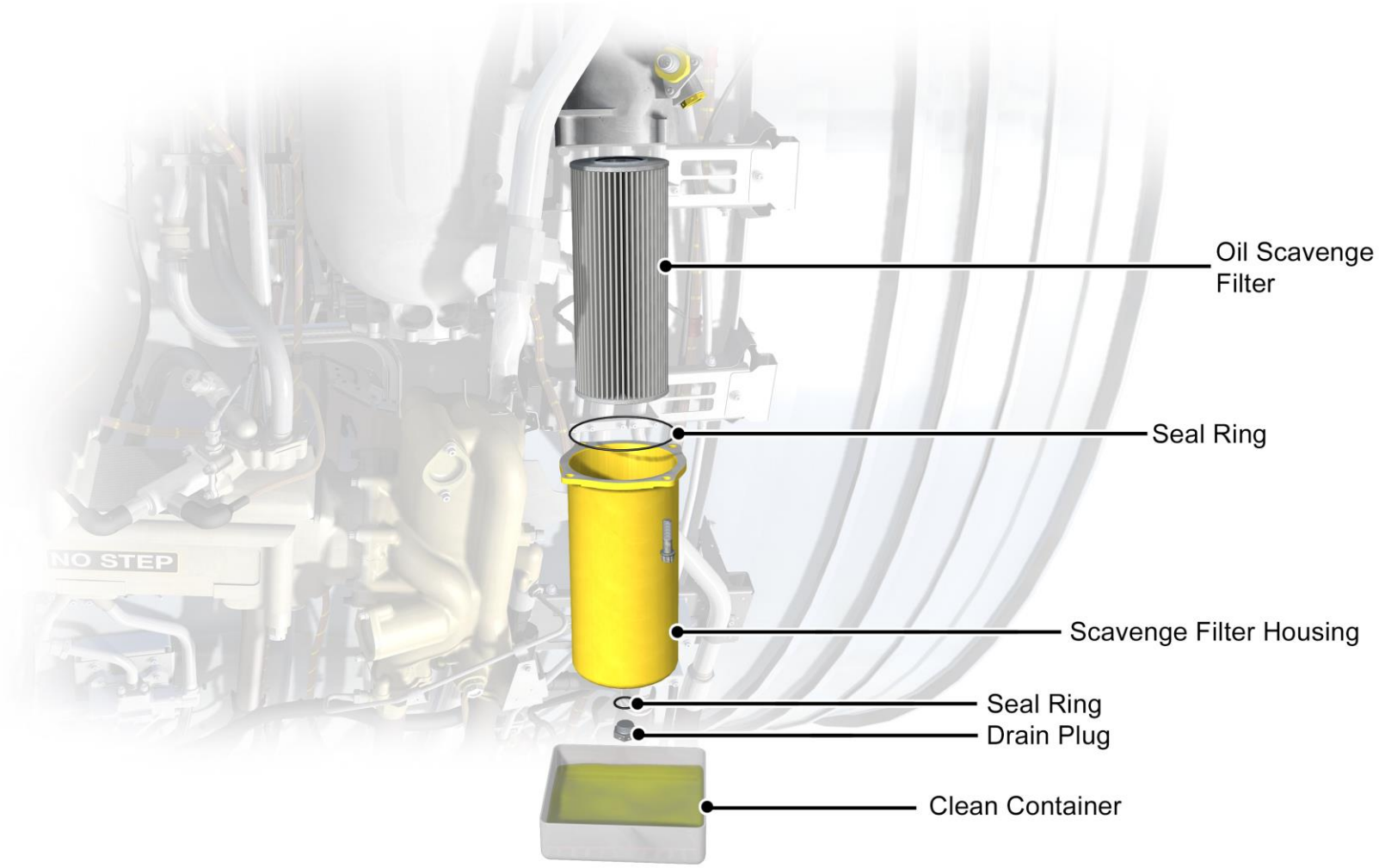

T1000 TEN_LBM_M07_137_01P

OIL SCAVENGE FILTER REMOVAL & REPLACEMENT

© Rolls-Royce plc 2018. Use or disclosure is subject to the legend on the Notice to Holder page

Maintenance Practices.

Oil Scavenge Filter Inspection

The following is a brief description of these tasks. Refer to the AMM for the full description and the relevant OMSD for the correct use of any specialised tooling.

AMM TASK B787-A-R79-00-00-04A-280B-A

Warning: BE CAREFUL WHEN YOU DO WORK ON THE ENGINE PARTS AFTER THE ENGINE IS STOPPED. THE ENGINE PARTS CAN STAY HOT FOR ALMOST ONE HOUR. DO NOT TOUCH HOT PARTS WITHOUT APPLICABLE GLOVES. HOT PARTS CAN CAUSE INJURY TO PERSONNEL.

1. Remove the contamination from the filter element.
2. Clean the filter and oil scavenge filter housing in a fuel/oil resistant, non-metallic beaker containing clean kerosene.
3. Lightly hit the filter element to remove any contamination.
4. Keep the used kerosene and contamination in the beaker for examination.
5. Remove the contamination from the filter membrane.
6. Cut the end caps off the element and make a cut longitudinally from one end to the other.
7. Discard the end caps.
8. Place the filter element on a flat surface and fully extend the element to make a flat sheet.
9. Remove a piece of the element approx 51mm by 203mm (2 inches x 8 inches) to make a sample.
10. Remove the inner and outer gauze from the filter membrane. Do not contaminate the centre area with metal from the wire mesh.
11. Place the sample into the beaker with kerosene in and place into the ultrasonic bath.
12. Operate the ultrasonic bath for 5 minutes.
13. Remove the sample from the beaker. Do not discard the kerosene as it may contain debris that will help with your diagnosis.
14. Put the drained oil from the filter housing through a clean filter paper.
15. Place a tissue around a magnet and pass the magnet over the filter paper.
16. Put the kerosene from the beaker through a clean filter paper.
17. Place a tissue around a magnet and pass the magnet over the filter paper.
18. Examine both tissue papers using a 10x-magnifying lens.
19. Refer to the AMM for the acceptance and reject standards. Laboratory analysis is also recommended to help with material identification.

© Rolls-Royce plc 2018. Use or disclosure is subject to the legend on the Notice to Holder page

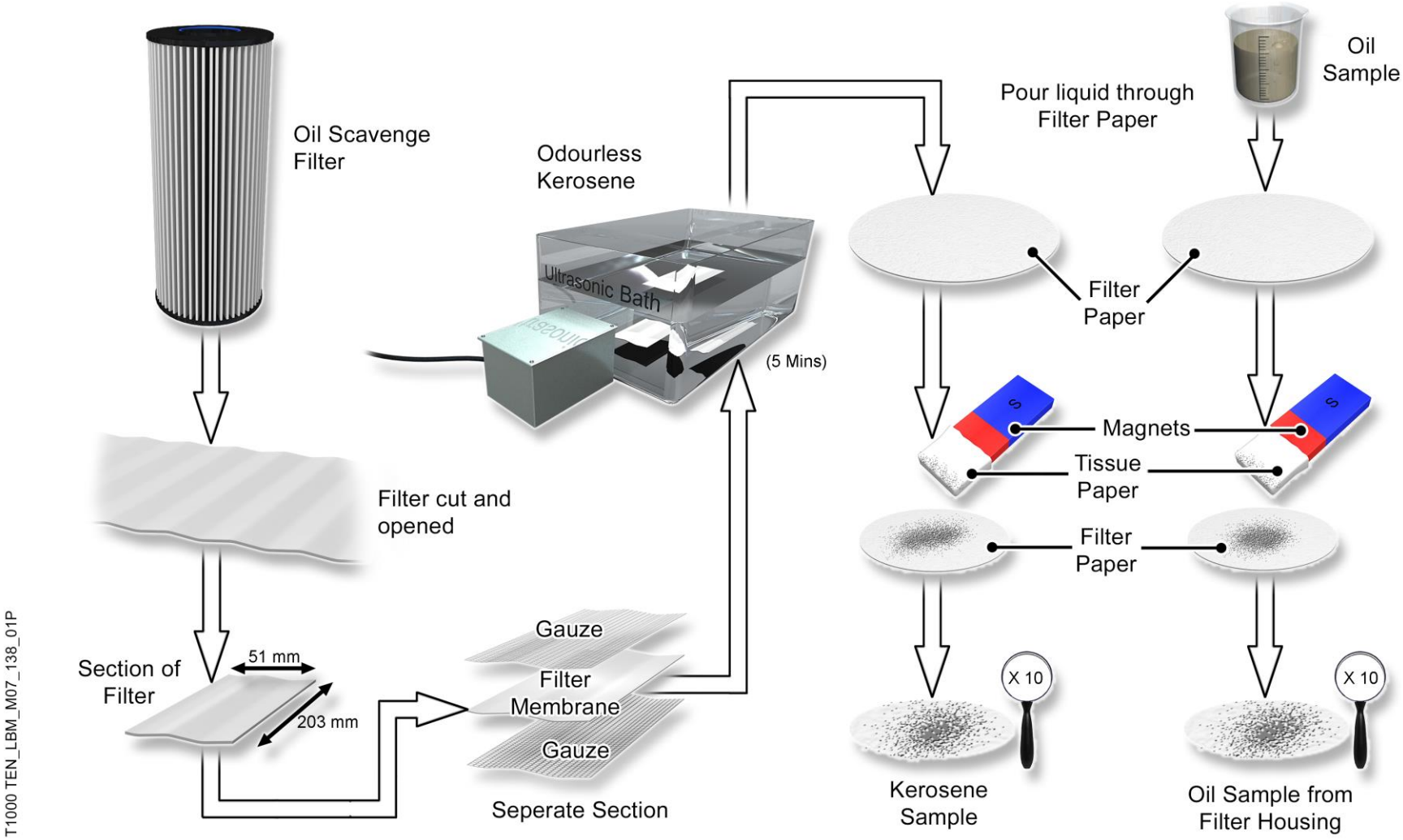

OIL SCAVENGE FILTER INSPECTION

© Rolls-Royce plc 2018. Use or disclosure is subject to the legend on the Notice to Holder page

Maintenance Practices.

Pressure Oil Filter Removal and Installation

The following is a brief description of these tasks. Refer to the AMM for the full description and the relevant OMSD for the correct use of any specialised tooling.

Oil Pressure Filter Removal

AMM Task B787-A-R79-22-14-00B-520A-A

The Warnings and Cautions are the same as the Scavenge Oil Filter Removal and Installation.

1. Ensure the EEC MAINT switch is in the NORM position by accessing the maintenance Control Panel Systems Menu and selecting MAINT, MAINT CTRL PGS, and MISC SYSTEM CTRLS (MSC).
2. Place a 19 litre (5 gal) oil resistant container below the oil pressure filter housing.
3. Remove and disgard the safety cable from the oil pressure filter housing.
4. Loosen the pressure filter housing by turning the housing counter clockwise. A strap wrench may be required for this task.
5. Continue to turn the oil pressure filter housing counter clockwise and remove the oil pressure filter and housing from the oil pump assembly.
6. Let the oil drain from the oil pressure filter housing into the 5-gallon container.
7. Pour the oil from the pressure filter housing into the clean container.
8. Remove the filter from the housing and discard the seal rings from the filter element and the housing.
9. Keep the oil pressure filter element and the oil from the container if a contamination check is required.
10. Inspect the filter (AMM TASK B787-A-79-00-00-03A-280B-A).
11. If the filter is satisfactory then it can be cleaned a maximum of two times (AMM TASK B787-A-R79-22-14-00B-253A-A).
12. After cleaning the filter should be engraved with a triangle and with a number one (1) inside the triangle.

© Rolls-Royce plc 2018. Use or disclosure is subject to the legend on the Notice to Holder page

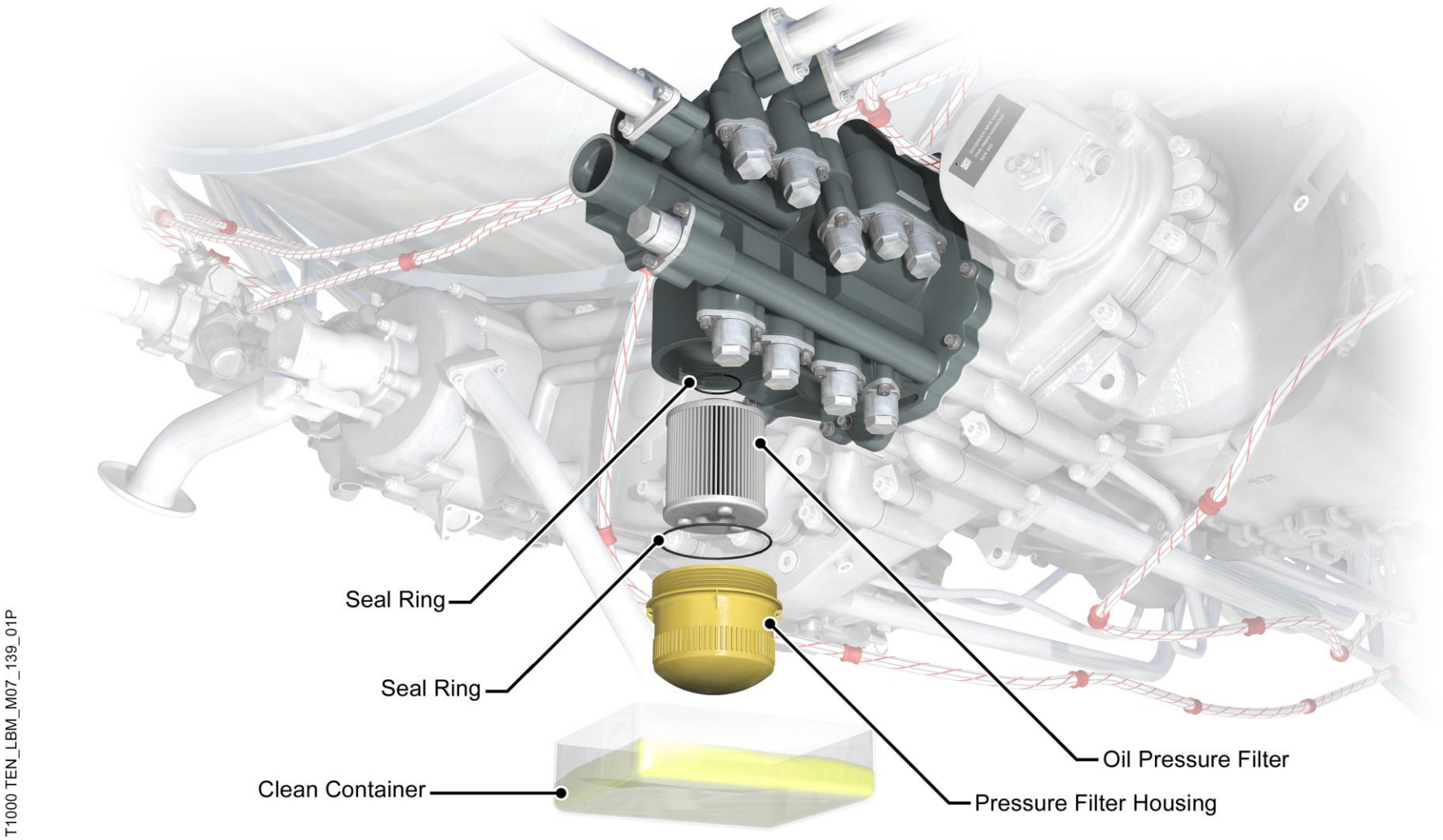

OIL PRESSURE FILTER REMOVAL AND INSTALLATION

© Rolls-Royce plc 2018. Use or disclosure is subject to the legend on the Notice to Holder page

Maintenance Practices.

Oil Pressure Filter Inspection

The following is a brief description of these tasks. Refer to the AMM for the full description and the relevant OMSD for the correct use of any specialised tooling.

Pressure Oil Filter Inspection

AMM Task B787-A-R79-00-00-03A-280B-A

The Warnings and Cautions are the same as the Scavenge Oil Filter Removal and Installation.

1. Examine the filter element, if damaged discard the filter.
2. If not damaged check how many times the filter has been cleaned. If the filter has two triangular marks with a number inside then replace the filter.
3. If the filter has one triangular mark with a number inside then clean the filter.
4. Temporarily blank off the ends of the filter and place into a clean solvent container.
5. Using clean solvent (refer to the AMM for the types of solvent) allow the filter to soak for between 30 minutes and 2 hours in a 19 litre (5 gal) container.
6. Place the filter in a 1 litre (1 Quart) container with clean solvent inside an ultrasonic cleaner.
7. Allow the ultrasonic cleaner to operate for 5 minutes.
8. Repeat operations 6 and 7.
9. Shake the filter and dry using clean compressed air.
10. Examine the filter using a 10x-magnifying lens.
11. If contamination material is evident discard the filter.
12. If there is no contaminations engrave a triangle with a number one inside to indicate the filter element has been cleaned.
13. If the filter is not to be installed immediately the place the filter in a plastic bag write the date on the bag and place into storage.
14. Refer to the AMM for the acceptance and reject standards. Laboratory analysis is also recommended to help with material identification.

© Rolls-Royce plc 2018. Use or disclosure is subject to the legend on the Notice to Holder page

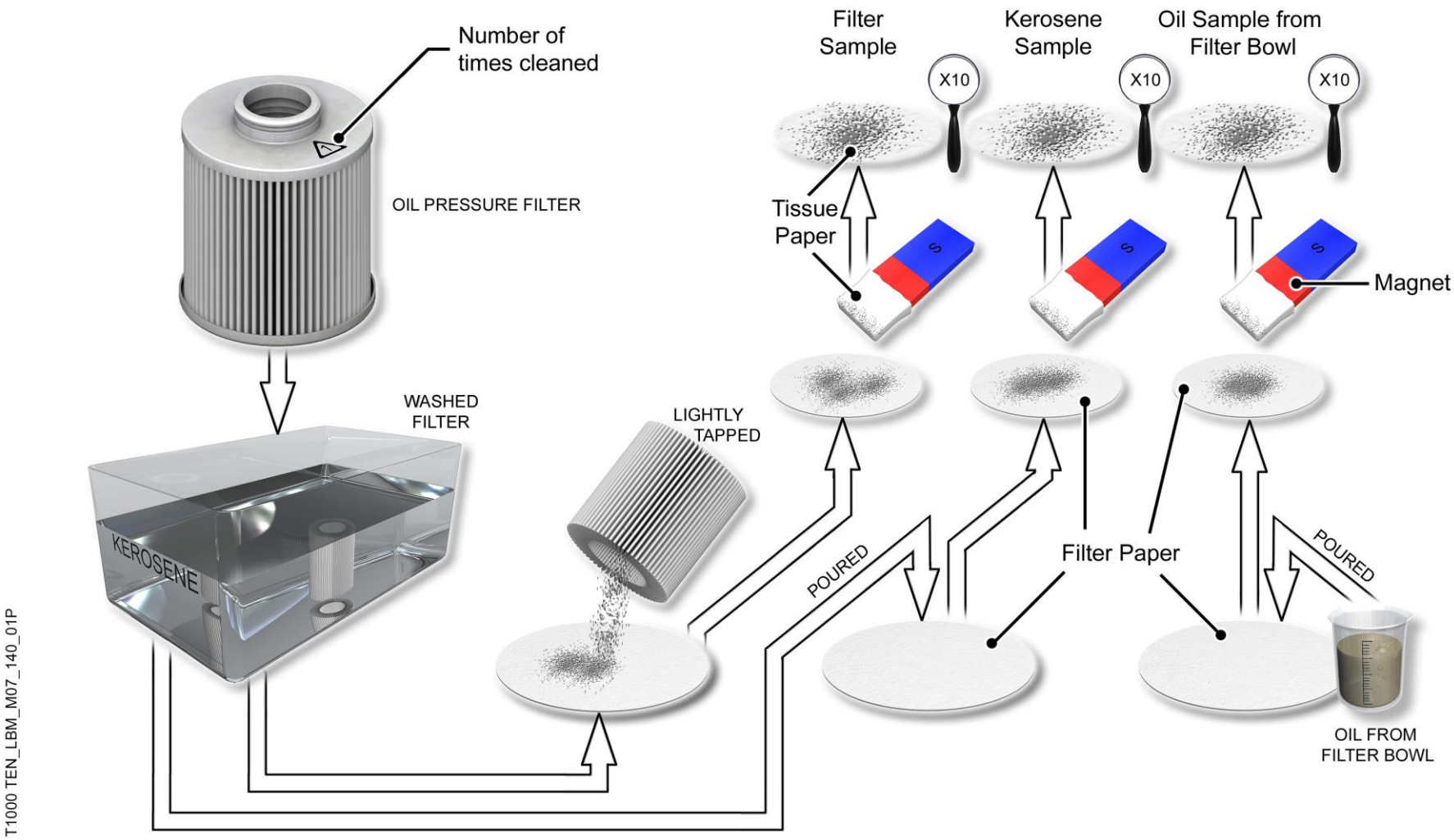

OIL PRESSURE FILTER INSPECTION

© Rolls-Royce plc 2018. Use or disclosure is subject to the legend on the Notice to Holder page

Maintenance Practices.

Oil Pressure Filter Removal and Installation

The following is a brief description of these tasks. Refer to the AMM for the full description and the relevant OMSD for the correct use of any specialised tooling.

Pressure Oil Filter Installation

AMM Task B787-A-R79-22-14-00B-720A-A

The Warnings and Cautions are the same as the Scavenge Oil Filter Removal and Installation.

1. Install new seal rings to the oil pressure filter and housing (AMM TASK B787-A-R70-02-01-00A-030A-A).
2. Install the filter element ensuring the filter engages into the oil pump assembly.
3. Install the oil pressure filter housing into the pump ensuring that the threads of the housing engage correctly.
4. Turn the filter housing clockwise by hand until tight.

CAUTION: TIGHTEN THE FILTER HOUSING WITH YOUR HAND ONLY. IF YOU USE TOOLS, DAMAGE CAN OCCUR.

5. Once tight safety the filter housing to the oil pump assembly using the recommended safety cable (AMM TASK B787-A-R70-12-04-04A-720A-A) or safety wire (AMM TASK B787-A-R70-12-04-03A-720A-A) as an alternative.
6. Replenish the engine oil as required (AMM TASK B787-A-12-13-01-00C-200A-A).
7. Carry out the applicable test for the filter element (AMM TASK B787-A-R71-00-00-14A-950A-A).

© Rolls-Royce plc 2018. Use or disclosure is subject to the legend on the Notice to Holder page

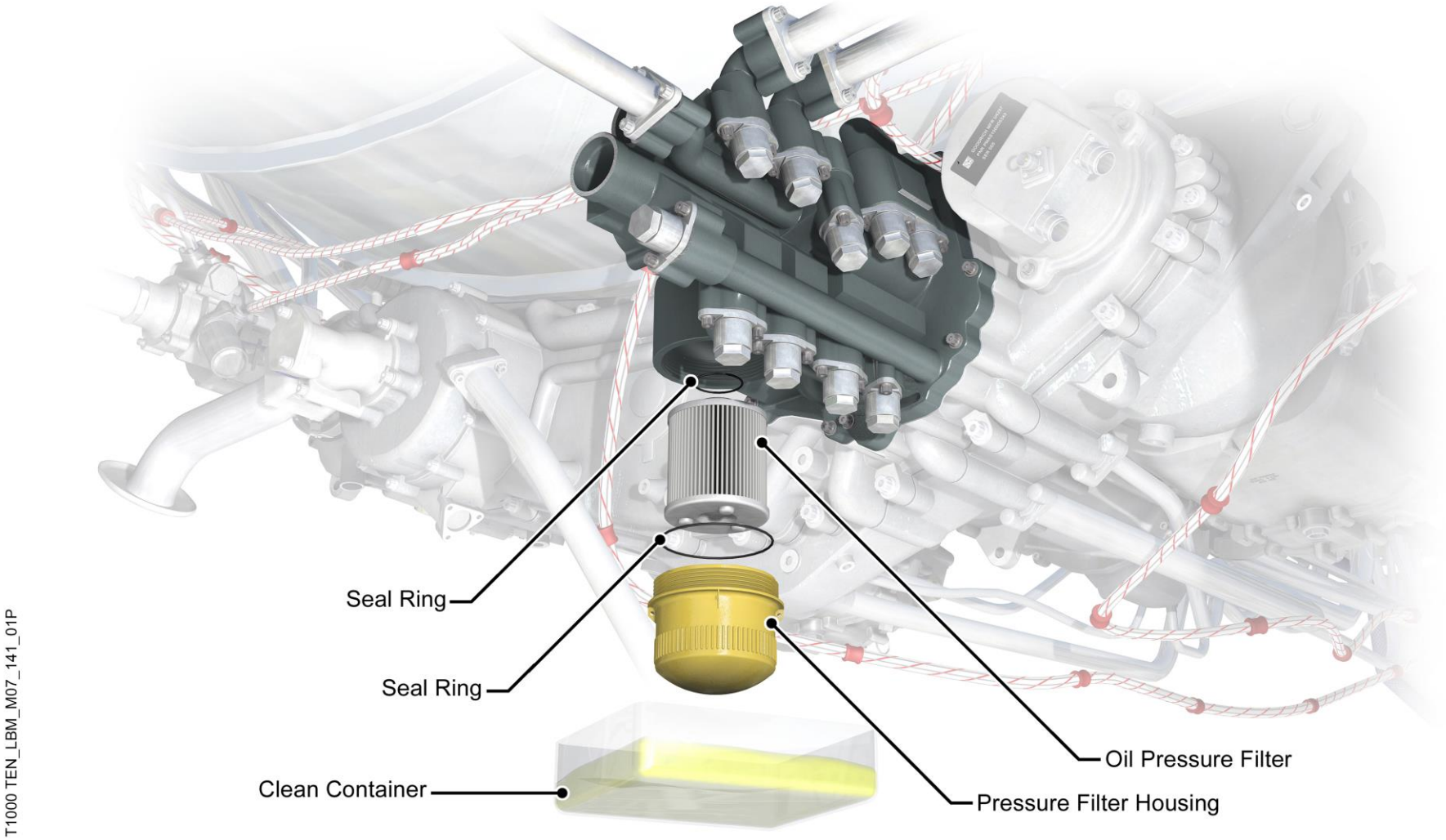

OIL PRESSURE FILTER REMOVAL AND INSTALLATION

© Rolls-Royce plc 2018. Use or disclosure is subject to the legend on the Notice to Holder page

On Board Maintenance – Ground or Initiated Tests

Introduction

The Initiated tests provide a means by which the maintenance personnel can conduct Engine related tests in a safe and controlled manner. The test called up is to be carried out when directed by the relevant AMM of FIM procedure.

Test Structure

The Central Maintenance Computing Function (CMCF) will generate screens to guide the operator though in the following test steps:

- Test Set-Up (indicates to the operator any necessary warnings, switch selections and instructions required to carry out the test in a safe manor).
- Test In-Progress (Indicates that the test is currently operating – a STOP TEST option is available if required at this point).
- Test Close-Up (switch selections and instructions required to return the system to its original condition).
- Fault Reporting (indicates Passed or Failed condition).

Below is an indication of the Oil Debris Monitoring System Test, AMM Task B787-A-R71-00-00-46B-300B-A, together with an explanation of the test capabilities.

Note: See the Troubleshooting section for more details on access and conducting Ground Tests.

© Rolls-Royce plc 2018. Use or disclosure is subject to the legend on the Notice to Holder page

Test Name
EEC SYSTEM TEST CHANNEL A
EEC SYSTEM TEST CHANNEL B
ESS ANTI-ICE SYSTEM
FUEL METERING VALVE SYSTEM CHANNEL A
FUEL METERING VALVE SYSTEM CHANNEL B
FUEL RETURN TO TANK VALVE
HANDLING BLEED VALVE SYSTEMS CHANNEL A
HARNESS CHANNEL A
HARNESS CHANNEL B
IGNITION SYSTEM CHANNEL A
IGNITION SYSTEM CHANNEL B
MODULATED AIR SYSTEM
P20/T20 PROBE HEATER
OIL BYPASS VALVE SYSTEM CHANNEL A
OIL BYPASS VALVE SYSTEM CHANNEL B
OIL DEBRIS MONITORING SYSTEM RESET CHANNEL A
OIL DEBRIS MONITORING SYSTEM RESET CHANNEL B
SECONDARY AIR SYSTEM
TURBINE CASE COOLING ACTUATION SYSTEM
THRUST REVERSER INTERLOCK SOLENOID
VFSG THERMAL BYPASS VALVE
VARIABLE STATOR VANE SYSTEM CHANNEL A
VARIABLE STATOR VANE SYSTEM CHANNEL B
VFSG AOHE AIR CONTROL VALVE SYSTEM CHANNEL A
VFSG AOHE AIR CONTROL VALVE SYSTEM CHANNEL B

The Oil Bypass Valve (OBV) Test allows the operator to verify the operation of the OBV actuation system for fault confirmation and return to service validation. During this test the engine will be dry motored.

The Oil Debris Monitoring System Reset Test allows the operator to reset the long-term debris count stored in the EEC NVM. During this test both channels of the EEC will be powered.

T1000 TEN_LBM_M07_142_01P

© Rolls-Royce plc 2018. Use or disclosure is subject to the legend on the Notice to Holder page

Flight Deck Effects

Introduction

Below is an indication of the associated Flight Deck Effect (FDE) messages for this section (Oil) together with the message type (level), an explanation of its meaning, dispatch restrictions (if any) and expected actions taken by flight or ground crew.

Note: This is for your guidance only. Due to the nature of the aircraft and engines continual development these may change and Rolls Royce cannot guarantee that they are still current and fully accurate. As such, always refer to the appropriate AMM procedure for reference.

© Rolls-Royce plc 2018. Use or disclosure is subject to the legend on the Notice to Holder page

Message	Type	Dispatch	Meaning	Crew Action
ENG OIL PRESS (L/R)	Caution	Do Not Dispatch	Engine oil pressure below the amber or red line limit with Engine running	Do Not Operate
ENG OIL TEMP (L/R)	Advisory	Do Not Dispatch	Engine oil temperature exceeds high redline limit with Engine running	Do Not Operate
ENG AIR/OIL VALVE (L/R)	Status	Do Not Dispatch	Engine air/oil surface cooler bypass valve failed in an uncommanded position	Do Not Operate
ENG OIL DMS (L/R)	Status	Do Not Dispatch	The Oil Debris Monitor System (ODMS) counts metal chips that indicate the onset of a bearing problem	Do Not Operate
ENG OIL DMS SENSOR (L/R)	Status	Short Term Dispatch Restrictions	Engine Oil Debris Monitoring System (ODMS) sensor has failed	Repair within time scales
ENG HP OIL FILT (L/R)	Status	Do Not Dispatch	Engine HP oil filter is approaching blockage	Do Not Operate
ENG HP OIL FILTER SENSOR (L/R)	Status	Short Term Dispatch Restrictions	Engine HP oil filter differental pressure signal is failed	Repair within time scales
ENG SCAV OIL FILT (L/R)	Status	Do Not Dispatch	Engine scavenge oil filter is in an approaching bypass condition	Do Not Operate
ENG SCAV OIL FILT SENSOR (L/R)	Status	Short Term Dispatch Restrictions	Engine scavenge oil filter differential pressure signal is failed	Repair within time scales
OIL PRESS SENSORS (L/R)	Status	Do Not Dispatch	Both oil pressure sensors on the left (right) Engine are failed	Do Not Operate
OIL QTY SENSOR (L/R)	Status	Short Term Dispatch Restrictions	Engine oil quantity transmitter fault detected by MEDC	Repair within time scales
OIL TEMP SENSORS (L/R)	Status	Do Not Dispatch	Both oil temperature sensors on the left (right) Engine are failed	Do Not Operate

T1000 TEN_LBM_M07_143_01P

OIL SECTION EICAS MESSAGES

© Rolls-Royce plc 2018. Use or disclosure is subject to the legend on the Notice to Holder page

Oil System Reference Wiring Diagrams

Introduction

Below is a wiring schematic of the associated units connected to the EEC. This is only a representation of the actual connectors but all plugs and connectors are indicated with the reference identifiers. This should be used for reference only and not be used as a definitive document. For a more detailed explanation (pins and sockets for troubleshooting purposes etc) and for further details, then always refer to the actual wiring diagrams as given within the AMM or FIM electronic documentation.

© Rolls-Royce plc 2018. Use or disclosure is subject to the legend on the Notice to Holder page

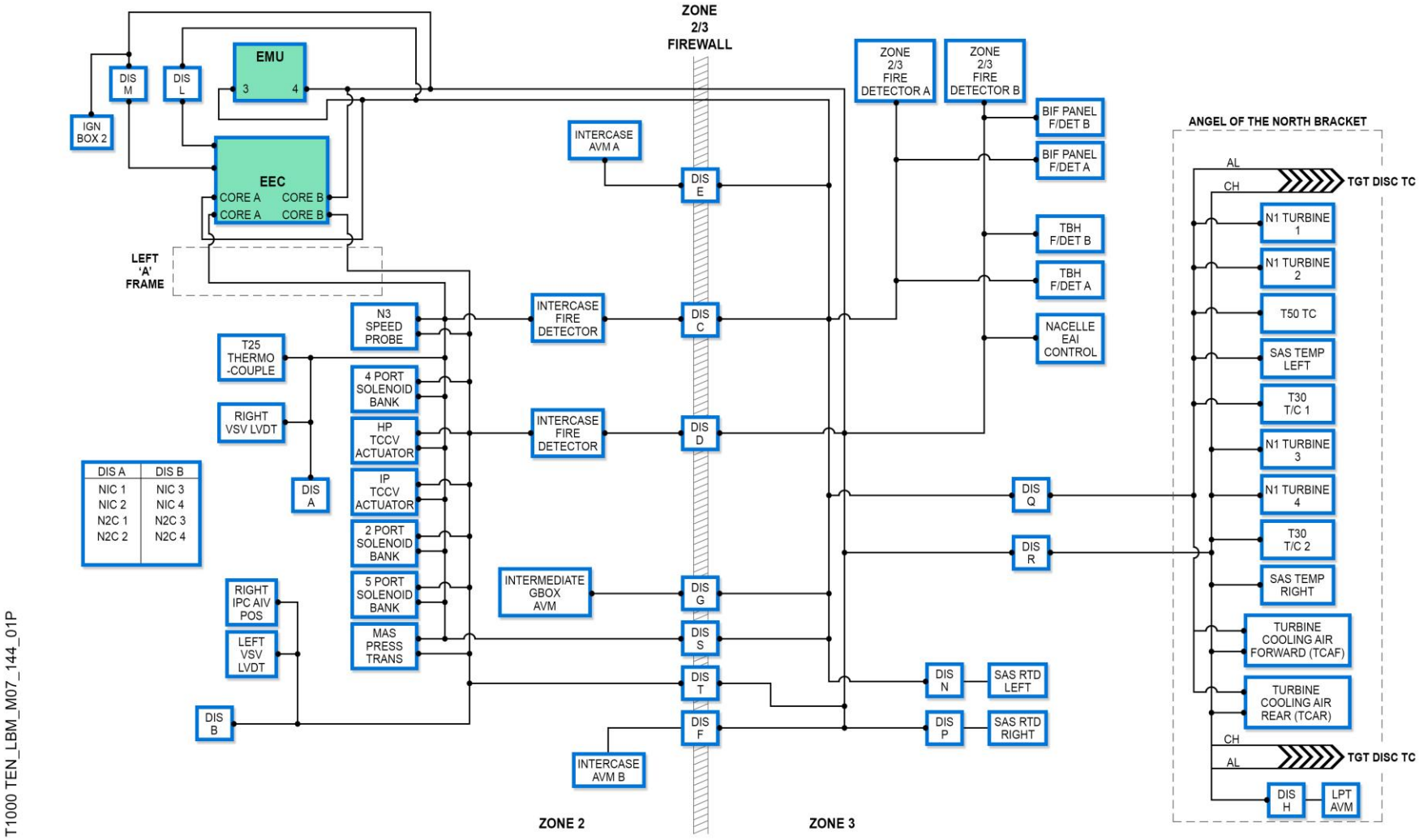

OIL SYSTEM WIRING DIAGRAM

© Rolls-Royce plc 2018. Use or disclosure is subject to the legend on the Notice to Holder page

Oil System Reference Wiring Diagrams

Introduction

Below is a wiring schematic of the associated units connected to the EEC. This is only a representation of the actual connectors but all plugs and connectors are indicated with the reference identifiers. This should be used for reference only and not be used as a definitive document. For a more detailed explanation (pins and sockets for troubleshooting purposes etc) and for further details, then always refer to the actual wiring diagrams as given within the AMM or FIM electronic documentation.

© Rolls-Royce plc 2018. Use or disclosure is subject to the legend on the Notice to Holder page

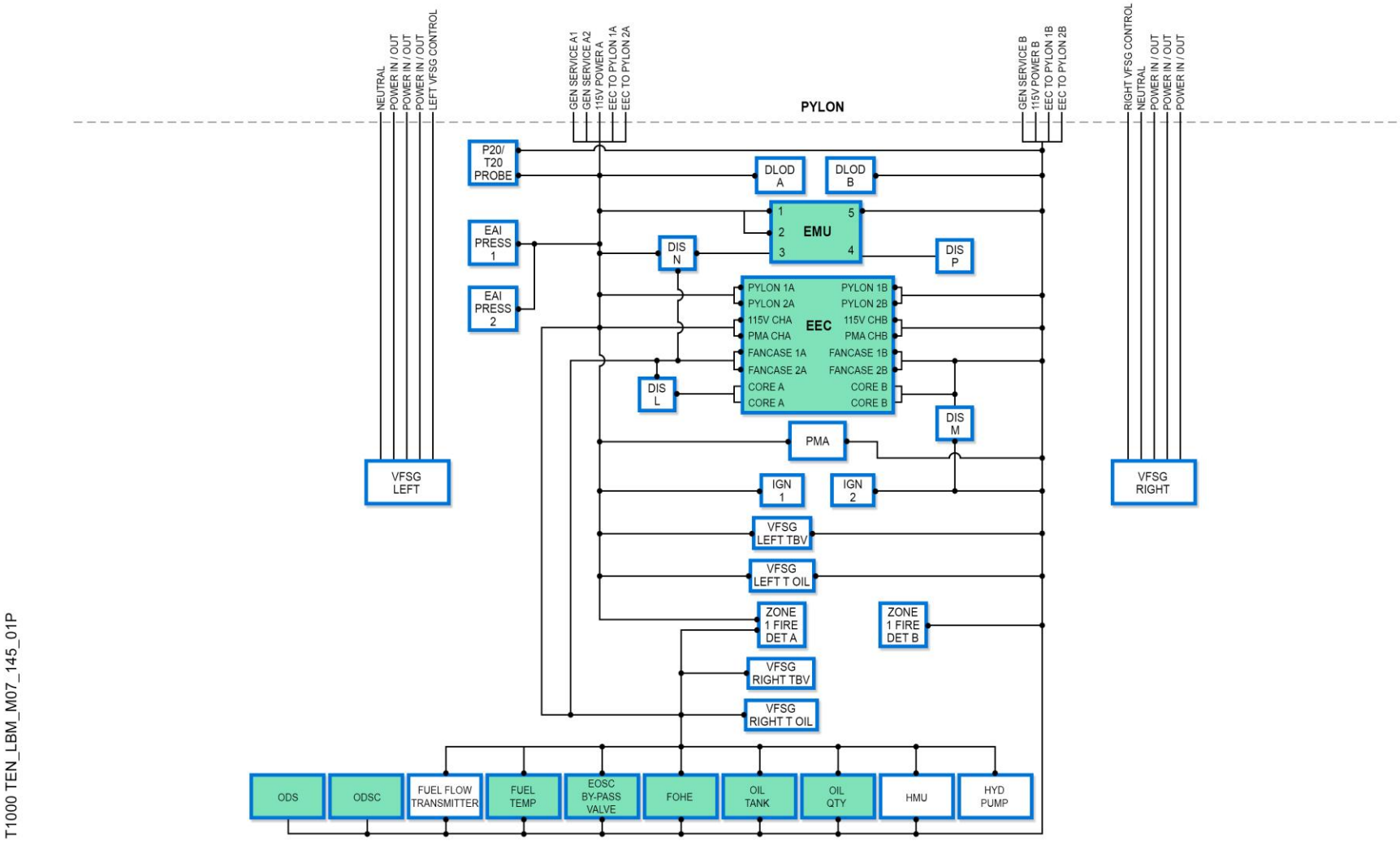

OIL SYSTEM WIRING DIAGRAM

© Rolls-Royce plc 2018. Use or disclosure is subject to the legend on the Notice to Holder page

END OF SECTION

Section 8 - Fuel System & Control

ATA Chapter Covered:

73

© Rolls-Royce plc 2018. Use or disclosure is subject to the legend on the Notice to Holder page

Power Management

Introduction

The method of power control used on the Trent 1000 Electronic Engine Control System (EECS) is described as Full Authority Digital Engine Control or FADEC.

The primary role of the EECS is to control the fuel flow to the combustion chamber in response to demanded power.

The correct flow of fuel must be maintained under all flight conditions, without any system limits being exceeded.

The EECS must also be able to automatically shutoff fuel flow to stop the engine in the event of an emergency.

The flight crew must always retain ultimate authority over fuel flow. This function is achieved through the fuel RUN/CUTOFF switch. Manual selection of the switch to the CUTOFF position will shutdown the engine, overriding any EECS command to the contrary.

© Rolls-Royce plc 2018. Use or disclosure is subject to the legend on the Notice to Holder page

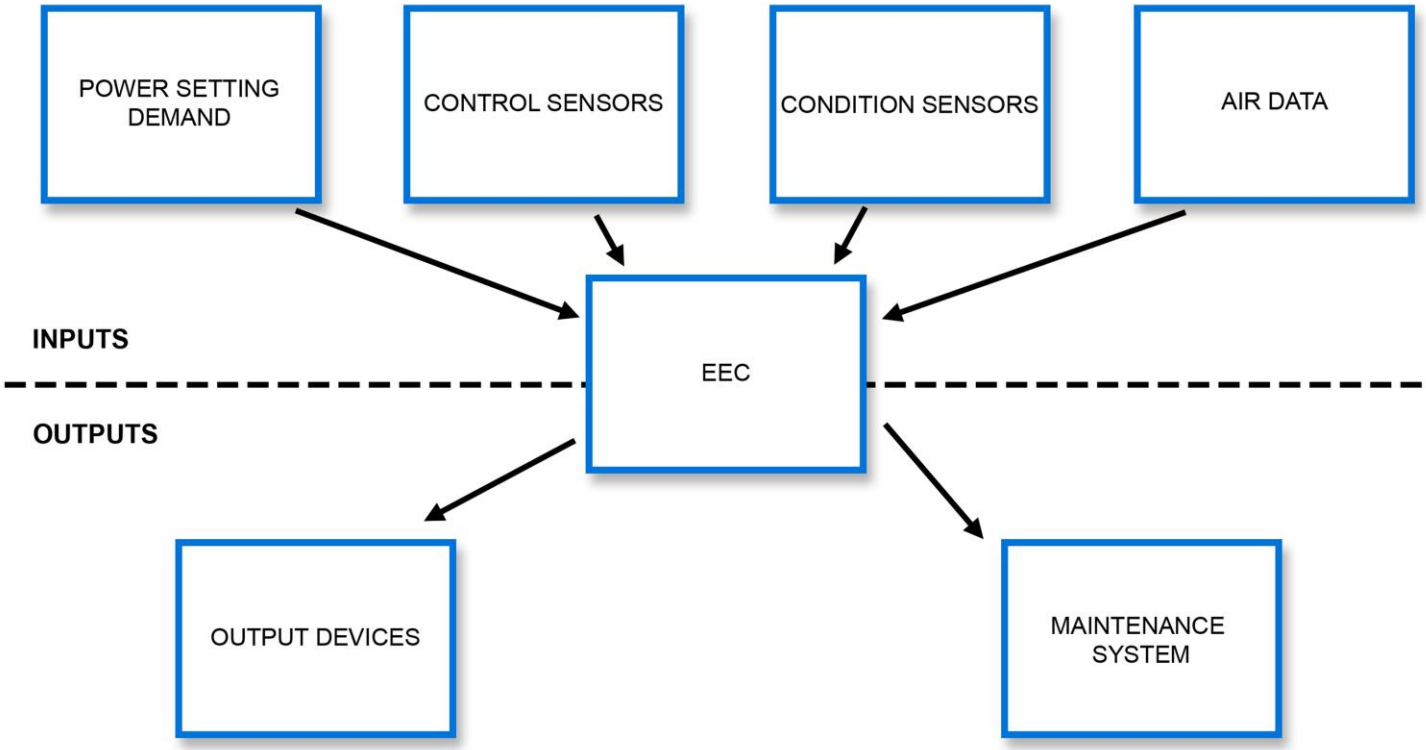

T1000 TEN_LBM_M08_146_01P

EECS SCHEMATIC

© Rolls-Royce plc 2018. Use or disclosure is subject to the legend on the Notice to Holder page

Methods of Engine Control

Introduction

The amount of power delivered by the engine is set by the position of the throttle lever. The throttle lever position can be set automatically by the aircraft Thrust Management Function (TMF), or manually by the flight crew.

Throttle Levers

Each throttle lever, including the reverse thrust lever, is connected to a dual channel throttle resolver, which converts Throttle Lever Angle (TLA) into a Throttle Resolver Angle (TRA) command signal. The EEC supplies power to excite the resolvers.

The resolvers are independent but produce the same TRA signal, each dedicated to one channel of the EEC.

In forward thrust, TRA varies from 36° at idle to 82.5°at full forward thrust. In reverse thrust, TRA varies from 22° at reverse idle to 8° at max reverse. The dead band between 36° and 22° is the arc of travel where the reverse thrust lever closes the reverser control switches.

The TRA angle is sent to the EEC where it is used in either one of the two thrust control parameters, Turbofan Power Ratio (TPR) or N1.

Primary Thrust Control

TPR is the primary thrust control parameter and is used in the forward thrust range between Forward Idle and Max Take-Off.

When in reverse thrust the EEC always controls the engine to N1, irrespective of whether the engine is operating in Primary or Alternate mode.

© Rolls-Royce plc 2018. Use or disclosure is subject to the legend on the Notice to Holder page

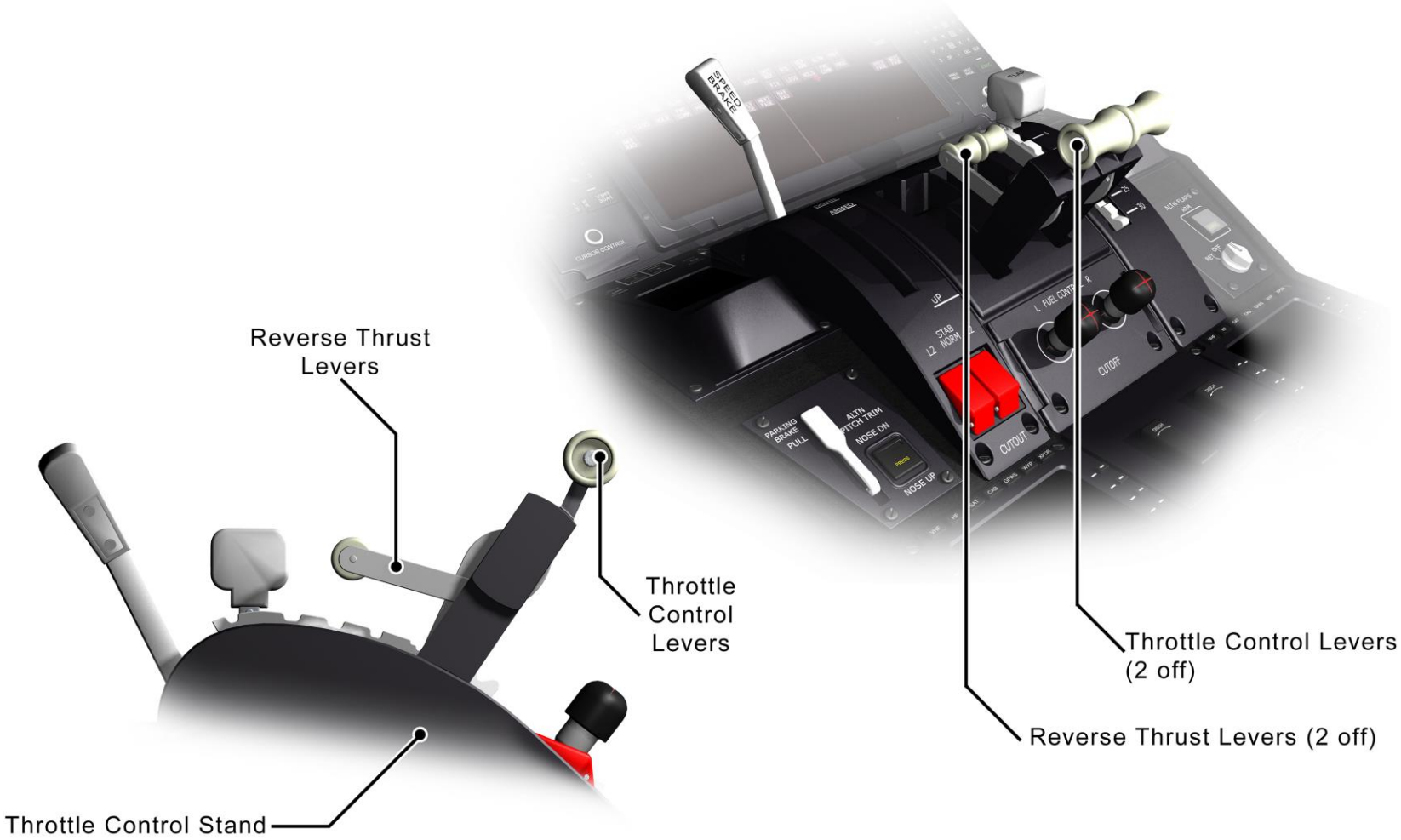

T1000 TEN_LBM_M08_147_01P

ENGINE CONTROL

© Rolls-Royce plc 2018. Use or disclosure is subject to the legend on the Notice to Holder page

Methods of Engine Control - continued

Alternate Thrust Control (N1)

The EECS uses N1 speed as an alternate thrust control mode when the primary control mode (TPR) is not available. There are two (2) alternate control modes available and no automatic TGT protection is available in either of them. The flight crew must therefore protect the engine from any TGT exceedances by retarding the thrust levers as required.

The two (2) Alternate Thrust Control Modes are as follows:

Soft Reversion

This mode is automatically selected by the EECS if any one of the following signals is lost:

- P0 – Ambient air pressure.
- P20 – Total air pressure.
- T20 – Total air temperature.
- P30 – HPC delivery pressure.
- TGT – Turbine Gas Temperature.
- TPR cannot be calculated by the EEC.
- A P30 pipe leak or freeze is detected.

In this mode the EEC locks the thrust at a constant level during the transition from TPR Mode to the Alternate Control Mode i.e. a ‘bumpless’ reversion.

This mode produces either:

- Unrated Commanded N1 (when **not** in Latched Take-Off Mode) which is a function of:
  - Basic Unrated Commanded N1 (Alt, TRA, Engine Rating Index)
  - N1 Lapse Delta for LTOM.

The aircraft can be dispatched in this mode.

Or

- Rated Commanded N1 (when **in** Latched Take-Off Mode) which is a function of:
  - Commanded TPR
  - Engine Mach number.
  - A temperature correction.

The EEC will only enter this Rated N1 Mode if in LTOM, in which case the thrust will be locked and the EEC will ignore the request to move to Rated N1 until LTOM has been removed.

To return to Primary Thrust Control Mode (TPR) from Automatic Alternate Control Mode, the flight crew must first select Manual Alternate Control Mode after which they can then manually select Primary Control Mode (TPR). If a fault reappears in Primary Mode, the EEC selects automatic Alternate Mode once more. If there is no fault, the EEC remains in Primary Thrust Control Mode.

If one engine automatically reverts to Alternate Thrust Control (Soft Reversion) the flight crew is required to pull back the thrust levers to a mid-thrust setting and then manually select Alternate Mode for that engine. The other engine must then be manually selected into Alternate Thrust Mode.

Below are the indications for Soft Alternate Mode.

© Rolls-Royce plc 2018. Use or disclosure is subject to the legend on the Notice to Holder page

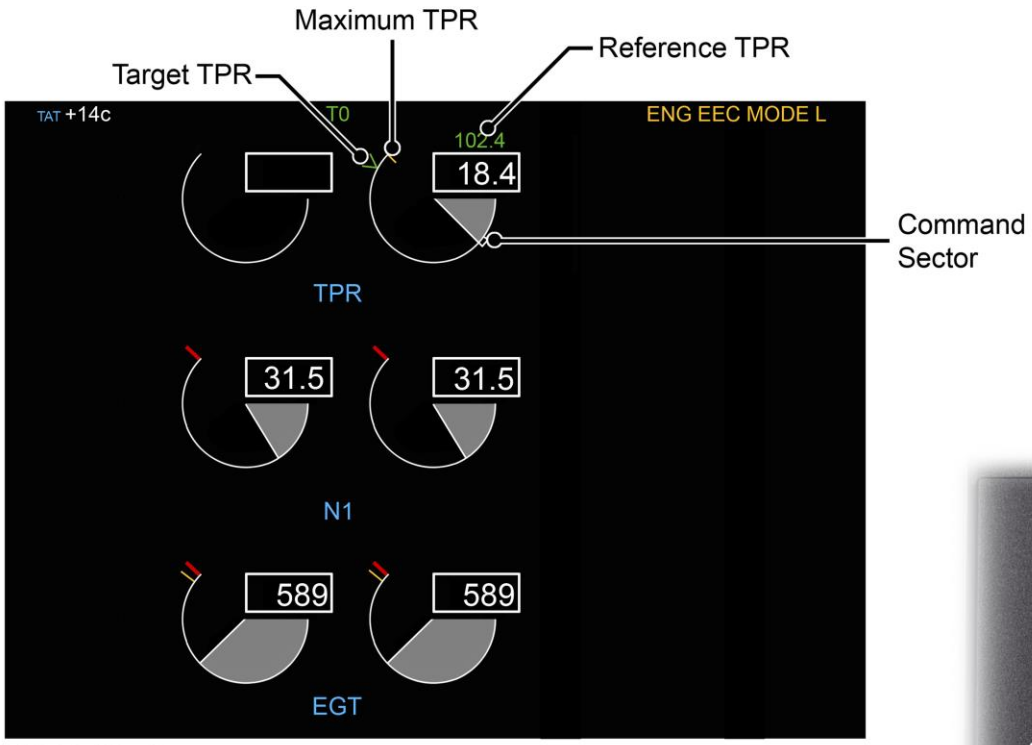

EICAS Display

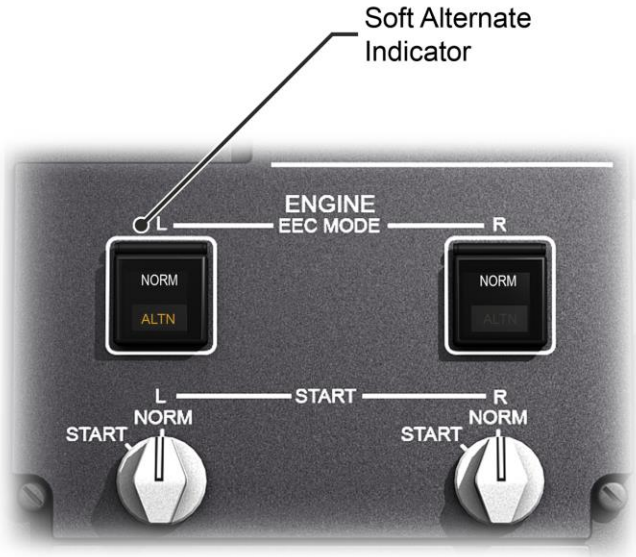

P5 Overhead Panel

T1000 TEN_LBM_M08_148_01P

ALTERNATE THRUST CONTROL – SOFT REVERSION

© Rolls-Royce plc 2018. Use or disclosure is subject to the legend on the Notice to Holder page

Methods of Engine Control - continued

Hard Reversion

This mode enables the flight crew to manually select Alternate Thrust Control so that the thrust levels on both engines use the same parameter. A manual selection is referred to as a 'Hard Reversion' and the EEC will enter Unrated N1 Mode.

Maintaining the same level of thrust is not required for manual selection of Alternate Control Mode.

If Alternate Control Mode is manually selected outside of Latched Take-Off Mode (LTOM), a step change in commanded thrust can be expected.

If the flight crew manually selects Alternate Control Mode during LTOM then the EEC will not select the Alternate Thrust Control Mode until LTOM is exited. This transition is not bumpless.

Below are the indications for Hard Alternate Mode.

Autothrottle and Manual Modes

The Autothrottle system crosses the boundary between the Aircraft Thrust Management Function (TMF) and the Engine Control System, and makes thrust setting easier and more accurate and minimises thrust lever stagger between Engines.

The Aircraft Autothrottle system physically adjusts the position of the Thrust Lever. The resulting Thrust Lever position forms the basis of the Engine thrust setting (as per manual operation).

When the Autothrottle switch is set to 'ARM' the Thrust Management Function (TMF) within the aircraft commands the Autothrottle Servo Motor (ASM) to position the thrust lever to the required thrust position.

If the flight crew disconnect the autothrottle by setting the autothrottle switch to DISARM, the engine thrust output is controlled by manually moving the throttle to the desired position.

© Rolls-Royce plc 2018. Use or disclosure is subject to the legend on the Notice to Holder page

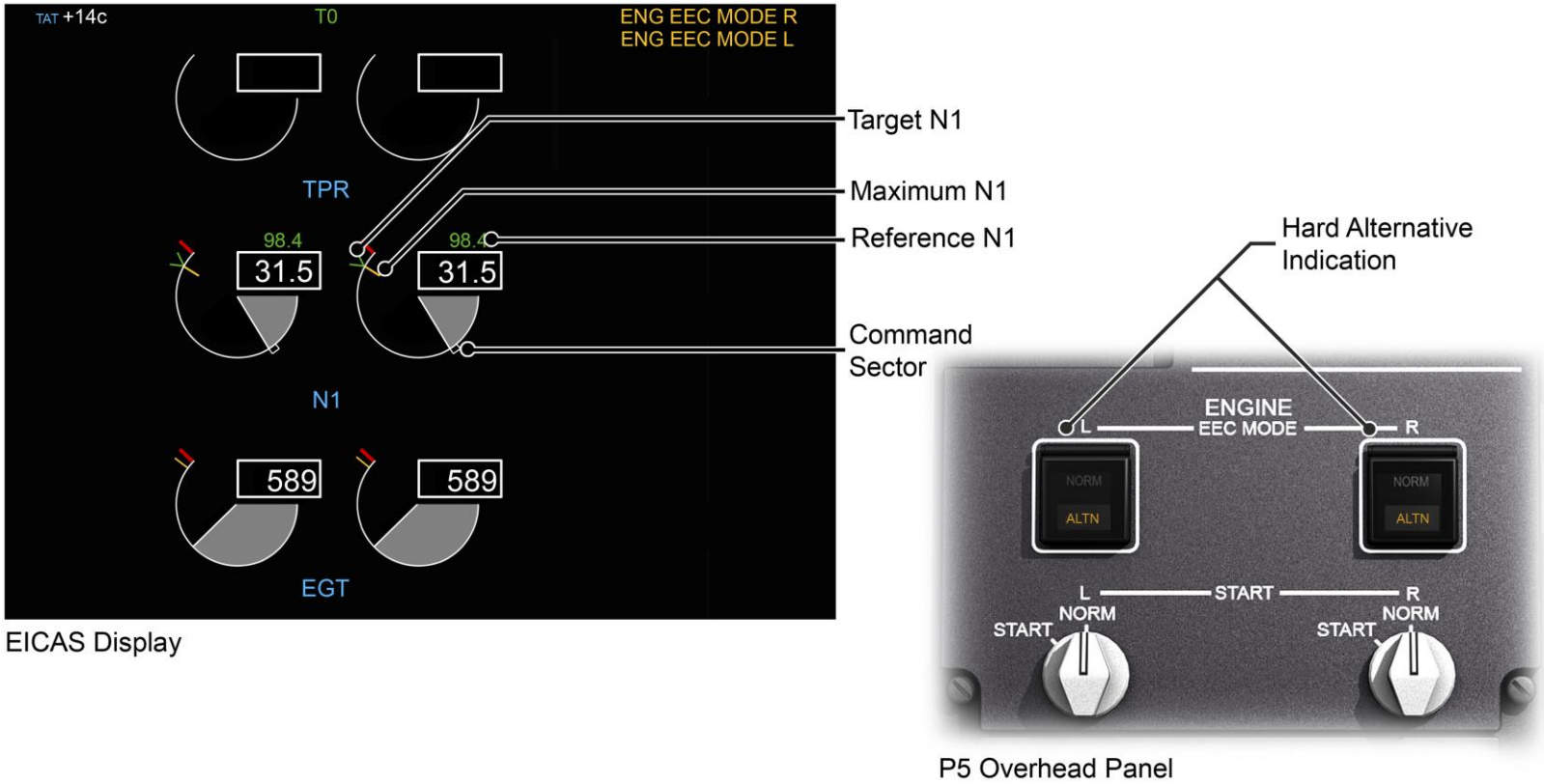

EICAS Display

P5 Overhead Panel

T1000 TEN_LBM_M08_149_01P

ALTERNATE THRUST CONTROL – HARD REVERSION

© Rolls-Royce plc 2018. Use or disclosure is subject to the legend on the Notice to Holder page

Power Setting - Basic Control Loop

Description

The engine thrust levers send TRA signals to the EEC which is processed together with information such as altitude, Mach number and ambient conditions to calculate the required thrust setting value for the engine condition. This value can be either TPR command when in primary mode, or N1 command if in alternate mode.

The commanded output of TPR (or N1) is transmitted to the engine accessory mounted control units.

The main unit associated with fuel control is the Hydro-Mechanical Unit (HMU). Inside the HMU a fully modulating Fuel Metering Valve (FMV) is used to regulate the amount of fuel sent to the combustion chamber.

The position of the FMV is controlled using a dual wound torque motor that is connected independently to each channel of the EEC, but driven only by the controlling EEC channel.

The position of the FMV is continuously indicated to both channels of the EEC by a dual wound Linear Variable Differential Transducer (LVDT).

The EEC uses the feedback from the LVDT position to make small adjustments to the command signals in order to achieve the desired condition, a method of control commonly described as a closed loop control system.

© Rolls-Royce plc 2018. Use or disclosure is subject to the legend on the Notice to Holder page

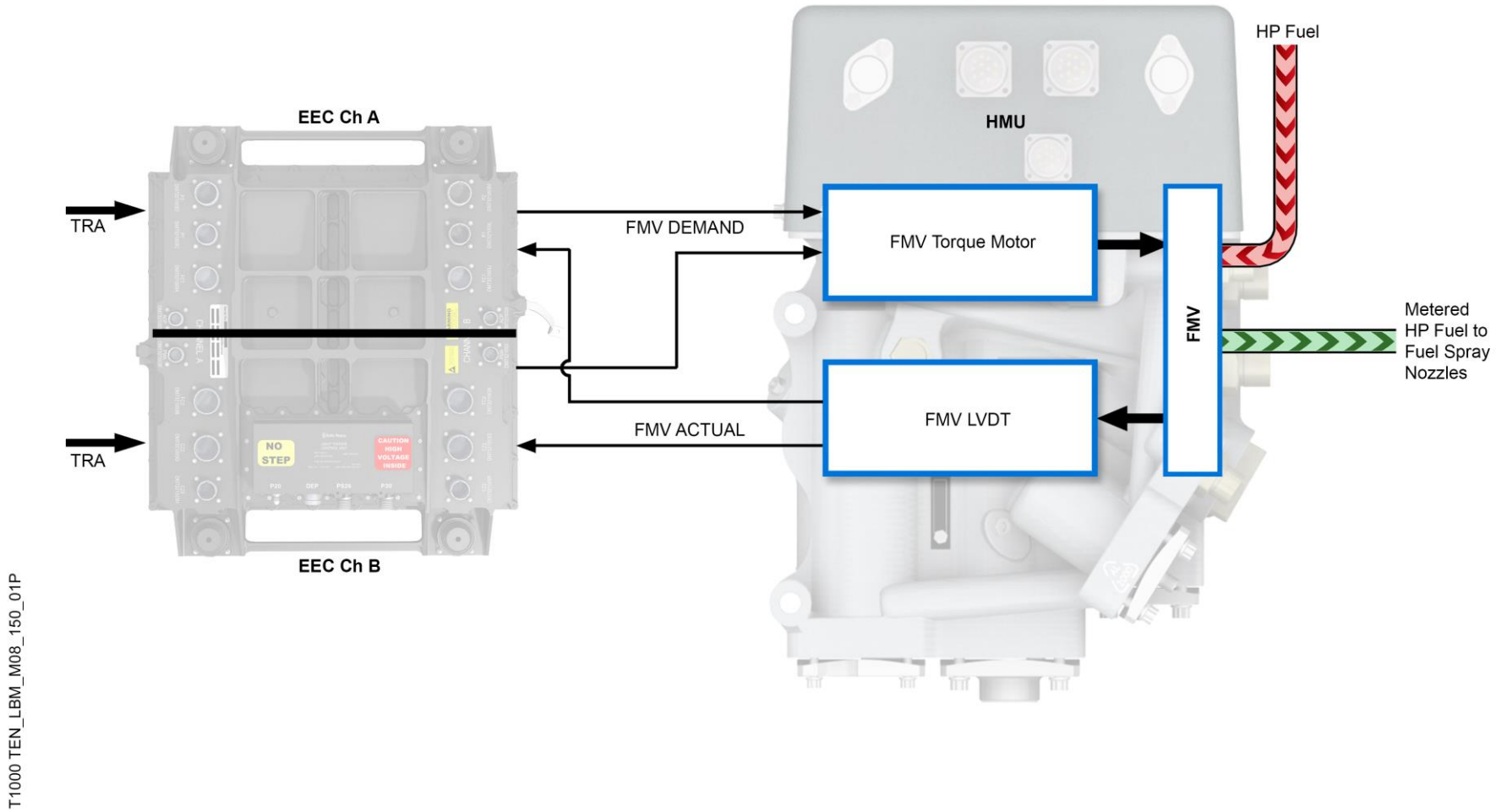

BASIC CONTROL LOOP

© Rolls-Royce plc 2018. Use or disclosure is subject to the legend on the Notice to Holder page

Fuel System

Introduction

The fuel system receives fuel from the aircraft tanks and delivers conditioned and metered fuel into the combustion chamber where it is ignited. The fuel system has two main functions: to supply fuel to the combustion chamber and to control the quantity sent to the combustion chamber.

Fuel is also used to power the VSV actuators (Section 9) and for the Advanced Turbine Case Cooling System (Section 10).

Fuel Supply

To satisfy demand the supply system must be able to:

- Increase aircraft fuel delivery pressure to overcome the pressure drop through the LP system.
- Prevent the fuel from icing.
- Remove contaminants from the fuel.
- Increase fuel delivery pressure so that the fuel delivered to the combustor is at a high enough pressure to ensure satisfactory atomisation before ignition.

Fuel Control

Fuel control is achieved by the EECS system interfacing with the Hydro-Mechanical Unit (HMU).

The fuel control system must be able to:

- Meter the fuel delivered to the combustion chamber to satisfy all engine thrust requirements.
- Automatically shut off fuel flow to the combustor.
- Manually shut off fuel flow to the combustor.
- Remove residual fuel from the fuel manifold on engine shutdown.

Fuel System Components

The engine mounted fuel system has the following components:

- Fuel Pump.
- Engine Fuel Oil Heat Exchanger (FOHE) and LP Fuel Filter.
- Hydro-Mechanical Unit (HMU).
- Fuel Temperature Sensor.
- Fuel Flow Transmitter.
- HP Fuel Filter.
- Fuel Manifold.
- Fuel Spray Nozzles (FSN).
- Drains Collector Tank and Ejector (Section 3).

© Rolls-Royce plc 2018. Use or disclosure is subject to the legend on the Notice to Holder page

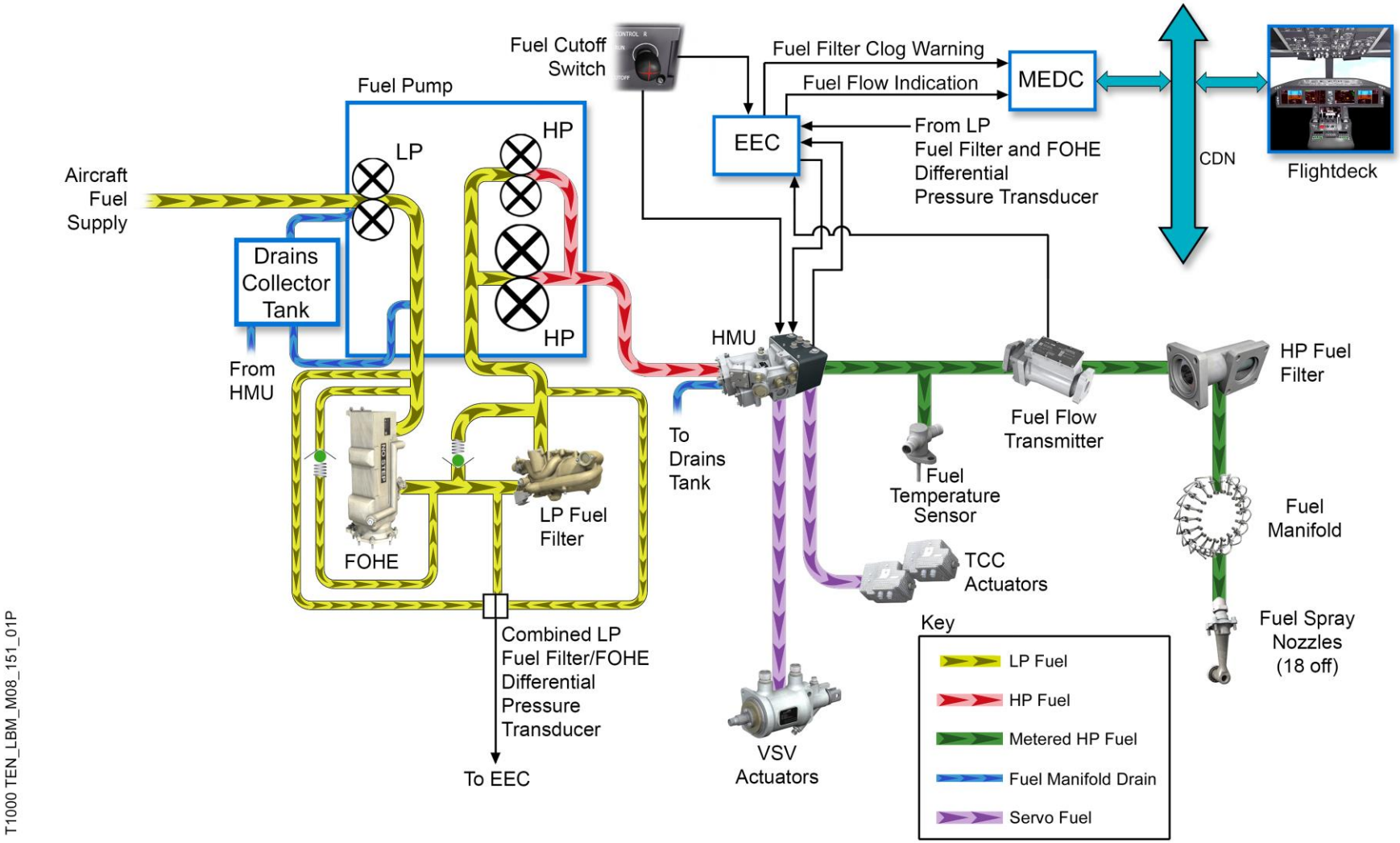

T1000 TEN_LBM_M08_151_01P

FUEL SYSTEM SCHEMATIC

© Rolls-Royce plc 2018. Use or disclosure is subject to the legend on the Notice to Holder page

LP / HP Fuel Pump Assembly

Purpose

The fuel pump receives fuel from the aircraft fuel system and has its pressure risen to ensure:

- Adequate pressure to operate fuel powered actuators.
- Good atomisation of fuel at the FSNs.

Location

The fuel pump is located on the right side of the external gearbox rear face. It is attached to a fuel manifold, which is an integral part of the external gearbox.

Description

The fuel pump is a single LRU that consists of a centrifugal LP pump and two parallel spur gear HP pumps.

Fuel from the aircraft tanks flows into the inlet of the LP fuel pump single stage centrifugal impeller. The impeller raises the fuel pressure for delivery to the FOHE.

The size of the LP pump is set so that the LP delivery pressure is high enough to overcome the worst-case pressure drop through the LP fuel filter while still meeting the needs of the HP fuel system.

There are two HP positive displacement spur gear type pumps mounted in parallel within the fuel pump assembly.

A gear drives the primary HP pump from the secondary pump that is connected to the drive shaft. The primary pump provides enough fuel to satisfy idle and cruise power settings. The secondary pump assists the primary pump to provide enough fuel for starting when the rotational speed of the fuel pump is low and conditions above cruise power.

During a low-flow engine condition the Combining Spill Valve (CSV) in the HMU spills the fuel back from the secondary pump to the Primary Pump inlet. The heat generated by the action of the pump is minimised and allows the correct fuel flow for the required engine condition to be passed to the HMU.

During a high-flow engine condition and engine starting the CSV closes to allow the flow from the secondary pump to augment the flow from the primary pump.

The HP pump output is delivered to the Hydro-Mechanical Unit (HMU) via a fuel manifold that is mounted on the external gearbox.

On engine shutdown a shot of oil from the external gearbox is sent into the fuel pump main drive shaft to lubricate the drive shaft splines.

To protect the pump body against excessive pressures in the event of a blockage, a pump pressure relief valve will operate at 1822psid, to return HP fuel back to the pump inlet.

The fuel pump is driven directly by the external gearbox and is secured to its face by 12 bolts. A dowel on the mating face of the external gearbox ensures correct alignment of the fuel pump.

Fuel for the drains tank ejector is supplied from the outlet of the LP Pump and a return line from the drains tank is attached to the inlet of the LP pump.

The fuel pump features two drain points, one for the LP and another for the HP pump. Painted yellow and positioned at the BDC of the pump they allow the pump to be drained of fuel prior to it being removed.

© Rolls-Royce plc 2018. Use or disclosure is subject to the legend on the Notice to Holder page

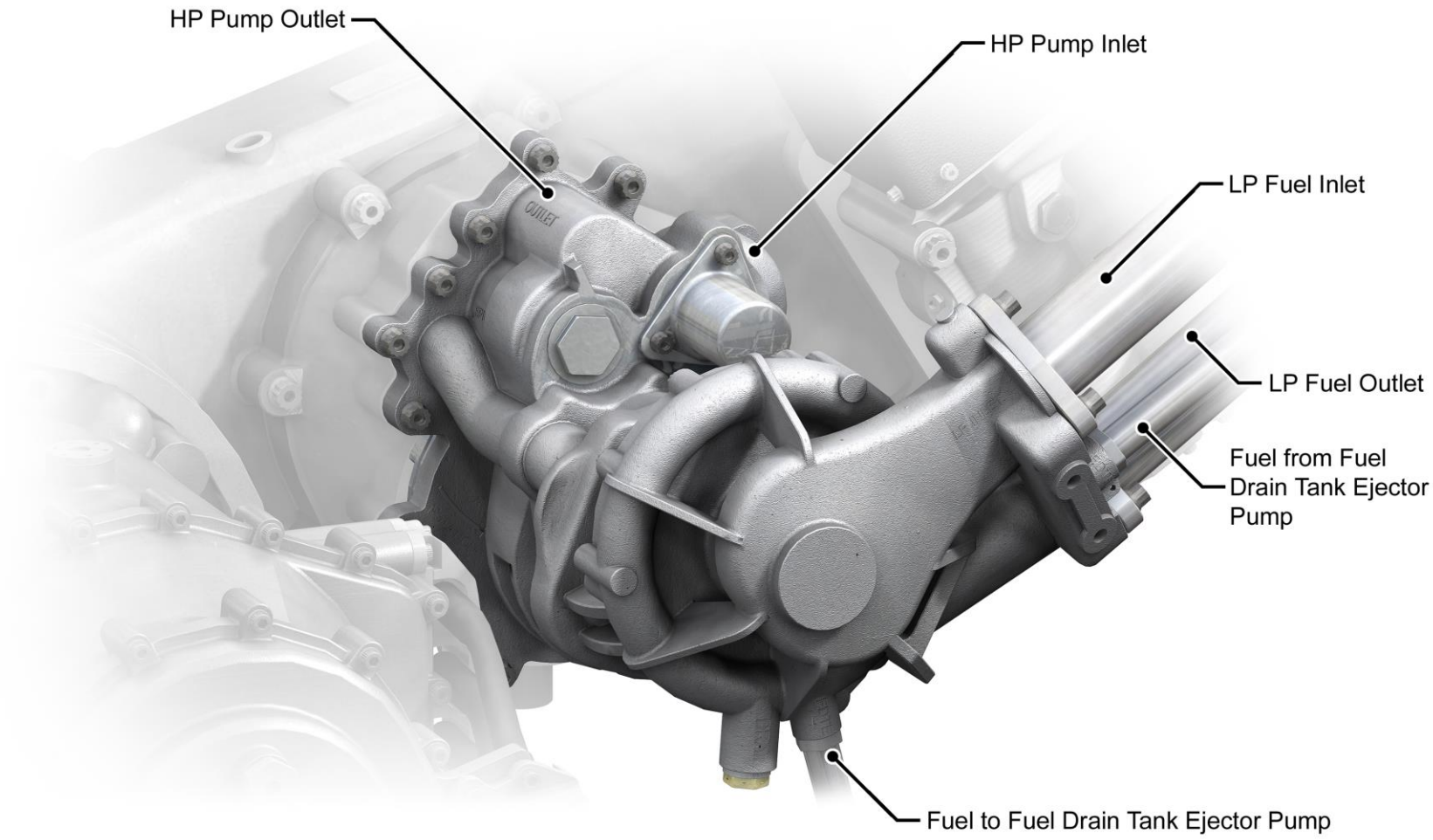

T1000 TEN_LBM_M08_152_01P

LP / HP FUEL PUMP ASSEMBLY

© Rolls-Royce plc 2018. Use or disclosure is subject to the legend on the Notice to Holder page

Fuel Oil Heat Exchanger & LP Fuel Filter Assembly

Purpose

The purpose of the FOHE is to transfer heat from the engine oil to the fuel. This process satisfies two requirements:

1. Removal of excess heat from the engine oil system.
2. Prevention of the water content in the fuel forming into ice crystals.

The purpose of the LP Fuel Filter is to remove any contaminants from the LP fuel system before it enters the HP system.

Location

LP Compressor Case, right side, below the Oil Tank.

Description

The FOHE is a single LRU that has a fuel/oil matrix assembly and an integral housing that locates the LP Fuel Filter.

The fuel/oil matrix within the FOHE consists of a series of plates and fins through which fuel and oil flow in opposite directions. The matrix is designed so that the transfer of heat from the oil to the fuel is enough to prevent any ice from forming in the fuel.

The LP fuel filter housing is part of the same LRU and fuel flows directly from the FOHE matrix into the LP fuel filter.

Combined LP Fuel Filter/FOHE Differential Pressure Transducer

A combined differential pressure transducer is housed on the body of the FOHE and is used to measure the pressure drop across both the heat exchanger matrix and the fuel filter.

The output from the differential pressure transducer is supplied to Channel A of the EEC, which processes the signal and cross-communicates it to Channel B.

If the differential pressure across the FOHE matrix is greater than 60psid the **ENG FUEL HX L(R)** status message will be generated to alert the flight crew of an impending bypass condition and a fuel bypass valve will open to allow fuel to bypass the FOHE.

If the differential pressure across the filter exceeds 8psid the **ENG FUEL FILTER L(R)** status message will be generated to alert the flight crew of impending filter bypass condition. If the differential pressure exceeds 19psid then the **ENG FUEL FILTER L(R)** advisory message will be generated to alert the flight crew that the filter is blocked and that fuel will bypass the LP fuel filter.

LP Fuel Filter

The 40-micron non-cleanable LP Fuel Filter is located in a housing bolted to the outlet of the FOHE matrix and provides the main protection for the components downstream of the filter.

The filter is held in place in the housing by an end cap, which has a drain plug attached and is bolted in position.

LP Fuel Filter Bypass valve

If the pressure drop across the filter exceeds 25psid, a bypass valve will open to allow unfiltered fuel through to the HP system.

© Rolls-Royce plc 2018. Use or disclosure is subject to the legend on the Notice to Holder page

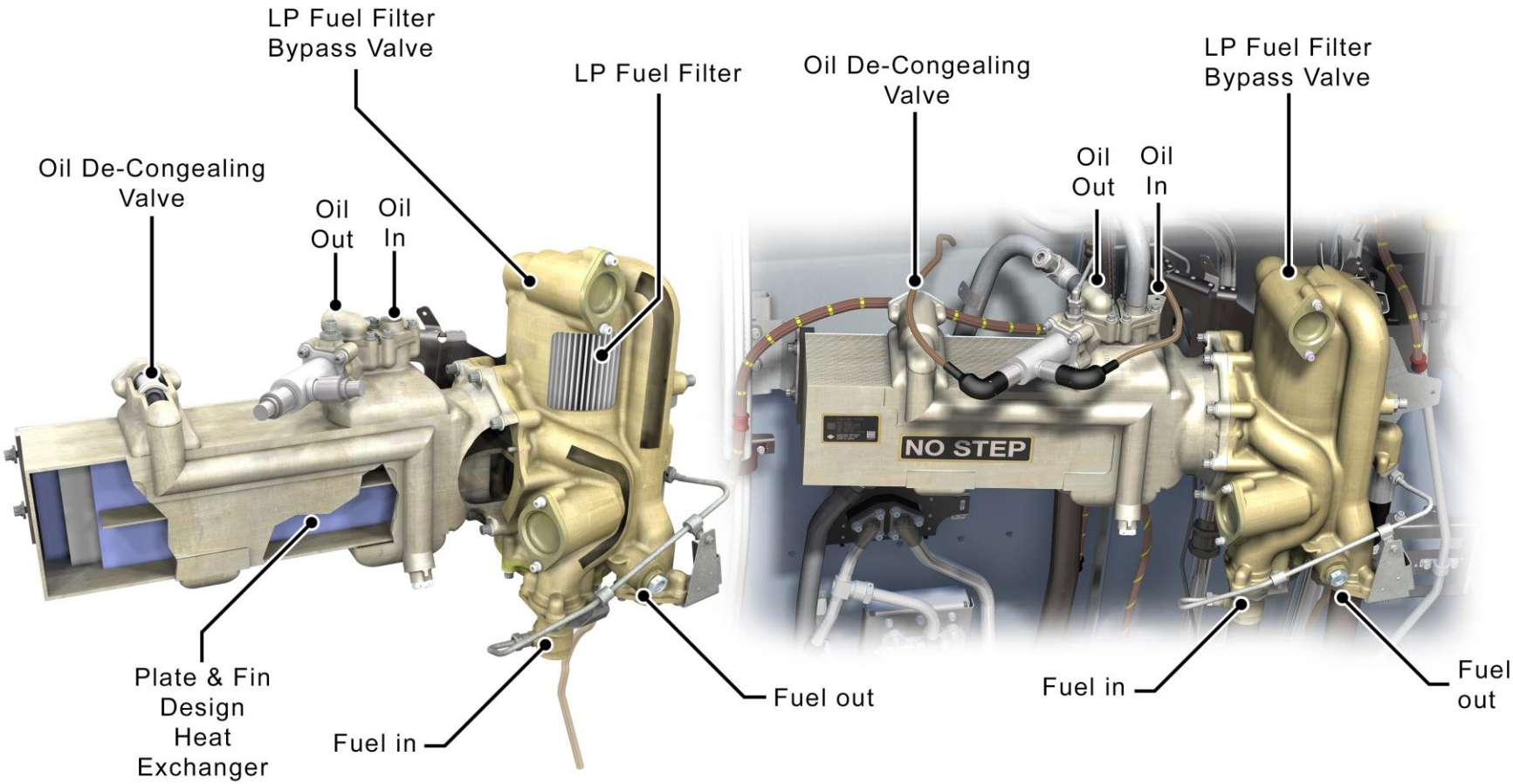

T1000 TEN_LBM_M08_153_01P

FUEL OIL HEAT EXCHANGER & LP FUEL FILTER ASSY

© Rolls-Royce plc 2018. Use or disclosure is subject to the legend on the Notice to Holder page

Hydro-Mechanical Unit (HMU)

Purpose

To control fuel flow to the engine, the fuel shut-off function, to supply fuel to operate VSV actuators and ATCC system.

Location

The HMU is mounted to the external gearbox fuel manifold, adjacent to the engine fuel pump.

Description

The HMU contains a number of servo valves that act on control inputs from the EEC and aircraft to regulate fuel flow to the fuel spray nozzles (FSN). The inputs are received through three electrical connectors (EEC Ch A, Ch B and aircraft).

Fuel Metering Valve (FMV)

Electrical inputs to a dual channel FMV Servo Valve changes the position of the Fuel Metering Valve (FMV) to control fuel flow. The movement of the FMV results in a change in the pressure drop across it and thus fuel flow to the Fuel Spray Nozzles. A dual channel LVDT provides the EEC with an FMV position signal.

Pressure Drop Control Valve (PDCV) & Combining Spill Valve (CSV)

The Pressure Drop Control Valve (PDCV) senses any pressure drop changes across the FMV. The PDCV acts on the Combining Spill Valve to move it to a new position so changing the pressure acting on the NRV in the Fuel Pump. The amount of fuel spill directed back to the inlet of the HP pump will therefore be changed by the position of the NRV. This changes the amount of fuel available at the FSN and hence engine power. Once the original pressure drop is restored the valves will stay in that position.

Dump Valve (DV)

The Dump Valve is attached to the bottom of the FMV. When the engine is shutdown on the ground the FMV is closed and the Dump Valve opens against spring pressure. Air pressure in the combustion chamber forces the fuel in the manifold back through the dump valve and into the drains tank. The fuel manifold is drained to prevent residual fuel in the manifold from becoming heated before the engine has cooled this prevents lacquering of the fuel tubes.

When the FMV is open, the Dump Valve is closed by a spring.

To aid in-flight starting the Dump Valve remains closed during any in-flight shutdowns.

Pressure Raising & Shut Off Valve (PRSOV)

The PRSOV has two purposes:

- To ensure that there is sufficient fuel pressure to maintain pressure in the FMV and VSV Actuators and,
- Positively STOP fuel flow to the FSNs when commanded by the Shut-Off Servo Valve (SOSV).

The SOSV is a 4-coil magnetically latching torque motor that uses servo fuel pressure to control the position of the PRSOV.

One of the coils is a STOP coil that is wired directly to the Fuel RUN / CUTOFF switch on the flight deck. Another is a START coil that is wired to both EEC Channels and provides a PRSOV open signal during engine start.

The final two coils are STOP coils that are wired directly to the over-threat protection systems in the EEC. One of them is wired to Channel A and the other to Channel B of the EEC. An induction type position switch provides both channels of the EEC with PRSOV position.

© Rolls-Royce plc 2018. Use or disclosure is subject to the legend on the Notice to Holder page

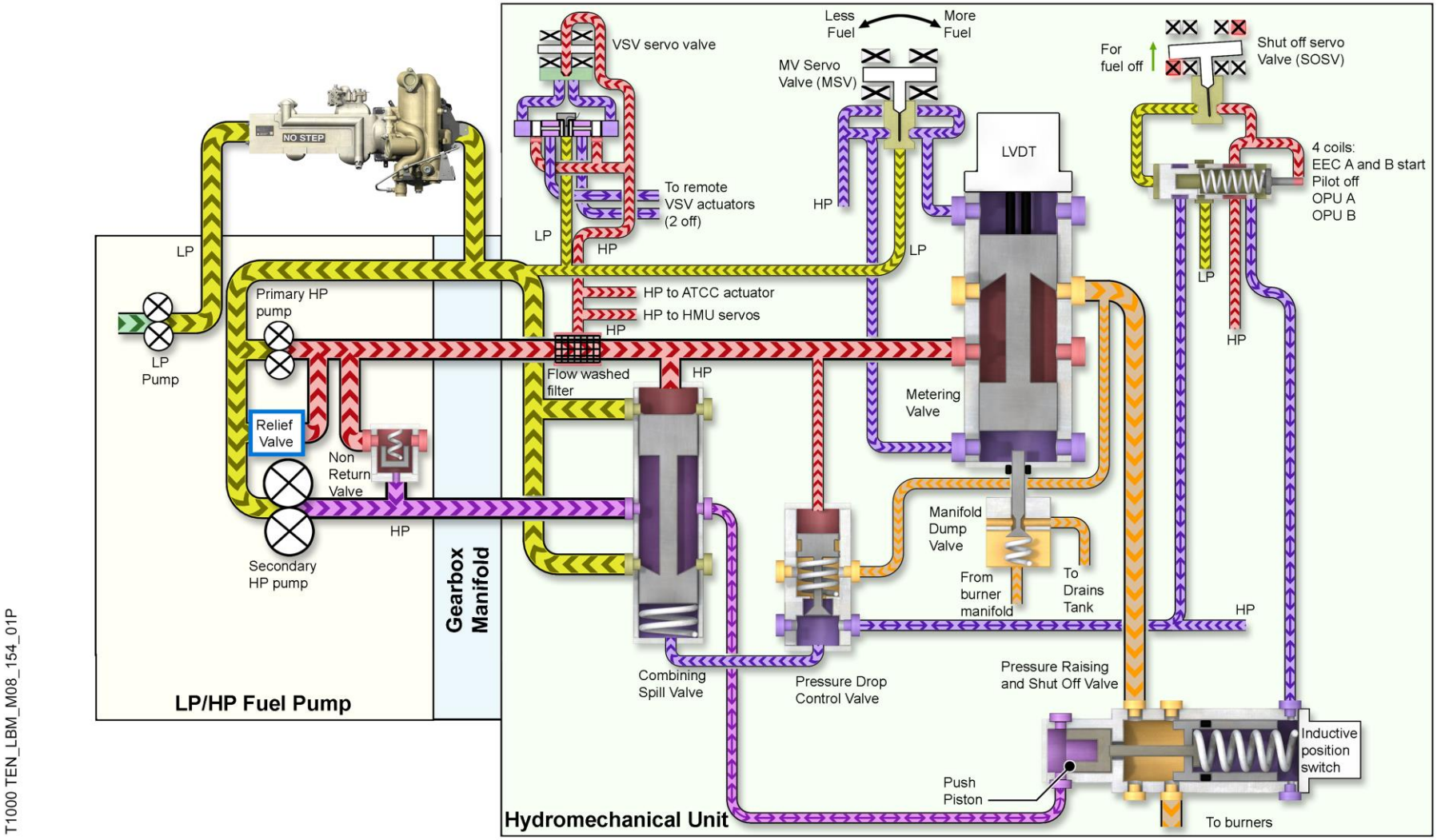

T1000 TEN_LBM_M08_154_01P

HYDRO-MECHANICAL UNIT (HMU) SCHEMATIC

© Rolls-Royce plc 2018. Use or disclosure is subject to the legend on the Notice to Holder page

Fuel Temperature Sensors

Purpose

The fuel temperature sensors provide the EEC with an indication of the fuel temperature (TFuel).

Location

The fuel temperature sensors are fitted to a boss on the main fuel pipe between the HMU and the Fuel Flow Meter.

Description

There are two separate platinum resistance temperature devices (RTD) installed in a single housing.

Each element provides an independent sense of TFuel for use by its own EEC channel in degrees Kelvin.

The EEC uses TFuel to control the amount of cooling provided by the engine heat management system and is displayed on the flight deck in degrees Celsius.

Fuel Flowmeter

Purpose

To provide indications of mass fuel flow and fuel usage for the flight deck.

Location

The fuel flow meter is located in the main HP fuel pipe between the HMU and the HP fuel filter.

Description

The transmitter sends signals to the EEC at a frequency that is proportional to the engine mass fuel flow rate.

The flow through the flowmeter causes a drum to rotate which has two magnets fixed to it 180 deg apart. A static pick-up coil produces two start pulses per revolution detects the motion of the drum.

Inside the drum is an impeller again with two magnets fixed to it 180 deg apart. A static pick-up coil produces two stop pulses per revolution detects motion of the impeller.

Each coil is connected to Channel B of the EEC and cross-wired into both channels. Fuel flow offsets the start and stop pulses of the drum and the impeller such that the time delay between them indicates the mass of the fuel flow to the fuel spray nozzles.

Fuel flow is used in the fuel management system of the aircraft and is also displayed on the flight deck.

© Rolls-Royce plc 2018. Use or disclosure is subject to the legend on the Notice to Holder page

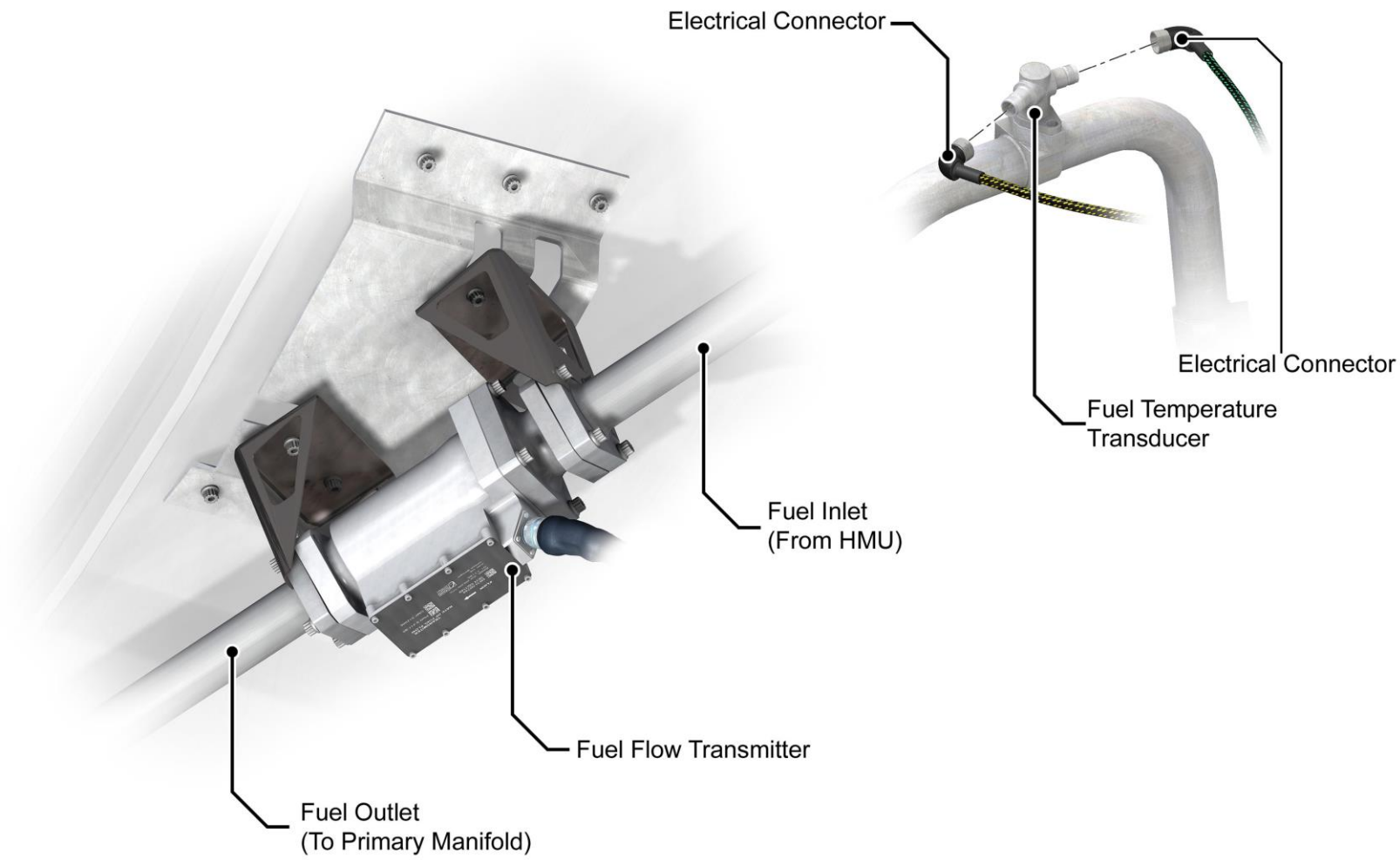

FUEL FLOW METER

© Rolls-Royce plc 2018. Use or disclosure is subject to the legend on the Notice to Holder page

HP Fuel Strainer

Purpose

The purpose of the HP Fuel Strainer is to remove contaminants from the HP fuel supply prior to entry into the fuel manifold.

Location

The HP Fuel Strainer is installed in a dedicated housing. The housing is itself bolted to the fuel manifold inlet at the 6 o'clock position between No.9 & 10 FSNs.

Description

The Strainer is a 250-micron element housed in a cast casing and secured to the casing by a captive retaining bolt.

The filter element can be cleaned a maximum of two times and will be indicated as such by markings on the Strainer I.A.W the Aircraft Maintenance Manual.

Fuel flows from the Fuel Flow Transmitter to the inlet of the filter housing before passing through the filter from the outside to the inside of the filter before flowing to the Fuel manifold and ultimately the Fuel Spray Nozzles.

© Rolls-Royce plc 2018. Use or disclosure is subject to the legend on the Notice to Holder page

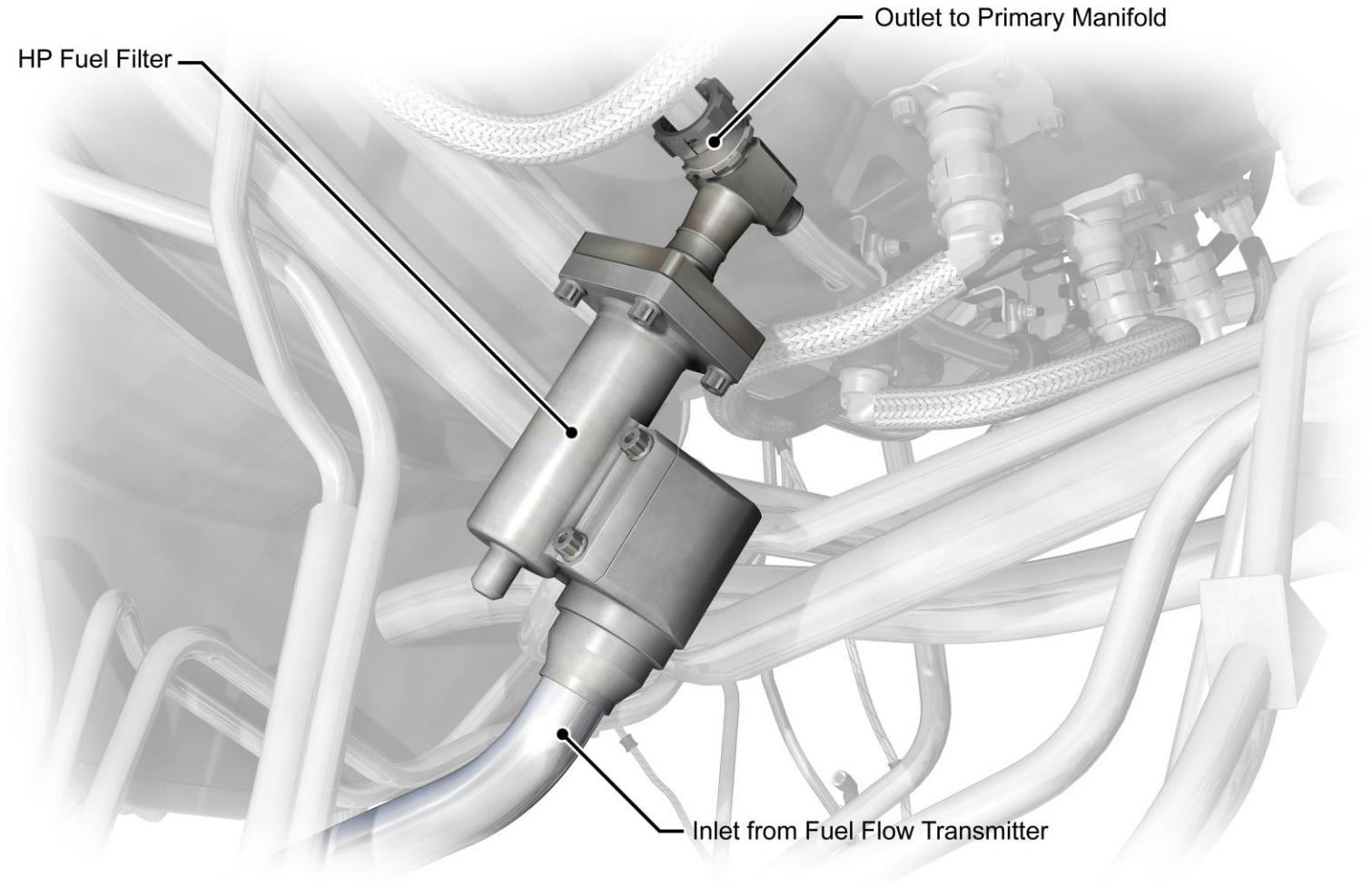

T1000 TEN_LBM_M08_156_01P

HP FUEL STRAINER

© Rolls-Royce plc 2018. Use or disclosure is subject to the legend on the Notice to Holder page

Primary and Secondary Fuel Manifold

Purpose

The purpose of the Primary Fuel Manifold is to deliver metered and filtered High Pressure fuel to the flexible Secondary Manifolds for use by the Fuel Spray Nozzles.

Location

The Primary Fuel Manifold is attached around the circumference of the combustion case by brackets. The Secondary Manifolds are connected directly to the Primary Manifold by 18 castellated connections.

Description

The Primary Manifold is divided into left and right halves that are assembled around the combustor case.

After leaving the HP Fuel Strainer the fuel enters the primary manifold at the bottom.

The manifold connects to 18 flexible Secondary Manifolds. Each secondary manifold delivers fuel to a single fuel spray nozzle.

When the engine is shutdown on the ground, the fuel in the manifold empties into the drain tank via a dump valve in the HMU.

If the engine is shutdown in flight the dump valve in the HMU remains closed and the fuel remains in the manifold to aid re-starting the engine.

Draining of the manifold avoids the potential for the fuel to be heated during engine shutdown which can cause lacquering in the fuel tubes or coking of the fuel spray nozzles.

© Rolls-Royce plc 2018. Use or disclosure is subject to the legend on the Notice to Holder page

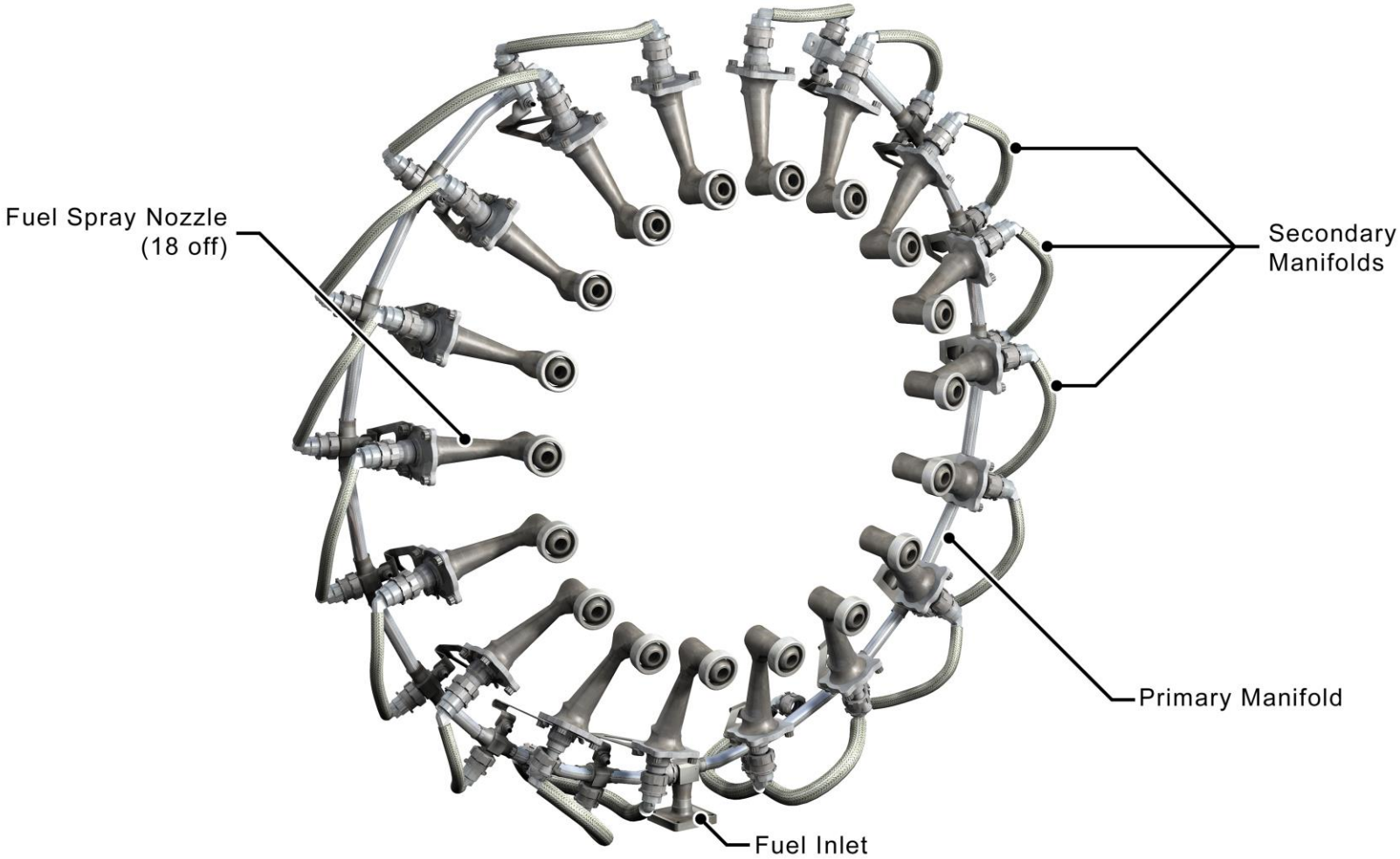

T1000 TEN_LBM_M08_157_01P

FUEL MANIFOLDS

© Rolls-Royce plc 2018. Use or disclosure is subject to the legend on the Notice to Holder page

Fuel Spray Nozzles

Purpose

The Fuel Spray Nozzles (FSNs) deliver the correct atomised fuel/air mixture to the combustion chamber.

Location

The FSNs are fitted through openings in the combustion case into the head of the combustion chamber.

Description

The engine has 18 fuel spray nozzles that are forged body fabrications of a simplex air spray design.

Fuel is delivered from the manifold to the FSN, passing through the body (feed arm) until it enters into a swirl chamber. Vanes within the swirl chamber impart a swirl into the fuel before being atomised and exiting the discharge orifice in a cone shaped spray.

The fuel spray nozzle head has an outer set of swirl vanes that allow HP compressor delivery (HP6) air to mix with the fuel. The swirl passages gives the cone the correct shape for a given engine speed.

Distributor Weight Assembly

Purpose

The distributor weight assembly controls the fuel delivery pressure to the Fuel Spray nozzles at low fuel flow conditions.

Location

The Distributor Weight Assemblies are located at the inlet of the FSN.

Description

The distributor weight assembly fits inside the fuel spray nozzle feed arm to control the fuel distribution to the FSNs around the manifold during engine ignition and relight.

New fuel spray nozzles are not supplied with the distributor weight assembly fitted and therefore they have to be transferred from the removed FSN to the replacement FSN.

There are two types of Trent 1000 weight distributor assemblies:

- Sixteen have a tungsten weight and are identified by a cross (X) on the end of the weight.
- Two have a steel weight and are identified by a single scribed line (-) on the end of the weight.

The two steel distributor weight assemblies are fitted to the FSNs adjacent to the igniter positions (positions 8 and 12 viewed from the rear of the engine looking forward).

It is important that the correct distributor weight assembly is fitted at the correct location to ensure that the correct fuel flow is present at each fuel spray nozzle at ignition and relight conditions.

© Rolls-Royce plc 2018. Use or disclosure is subject to the legend on the Notice to Holder page

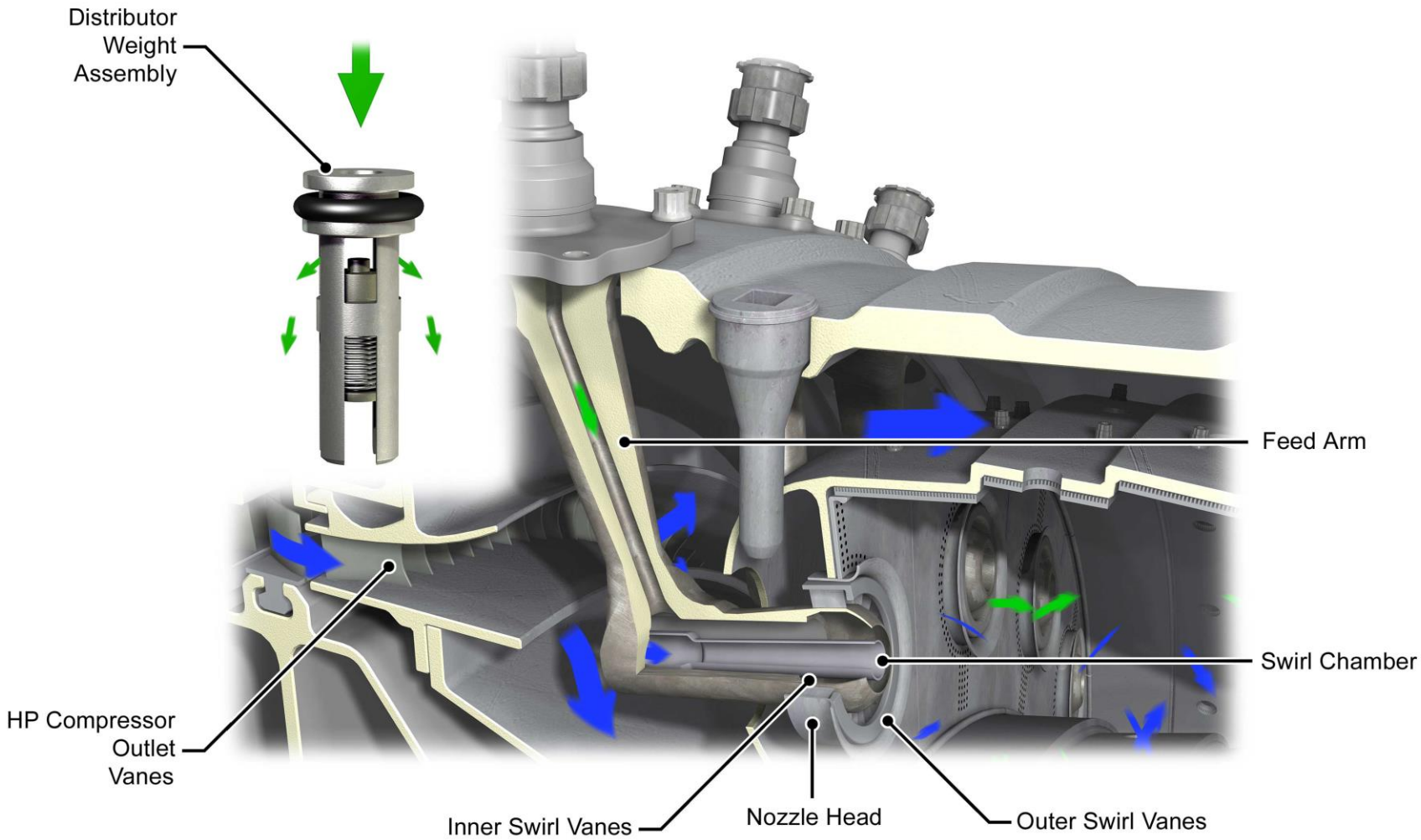

T1000 TEN_LBM_M08_158_01P

FUEL SPRAY NOZZLE

© Rolls-Royce plc 2018. Use or disclosure is subject to the legend on the Notice to Holder page

Maintenance Practices.

LP Fuel Filter Removal and Replacement

The following is a brief description of these tasks. Refer to the AMM for the full description.

LP Fuel Filter Removal

AMM Task B787-A-R73-11-13-00B-540A-A

WARNING:

BE CAREFUL WHEN YOU DO WORK ON THE ENGINE PARTS AFTER THE ENGINE IS STOPPED. THE ENGINE CAN STAY HOT FOR ALMOST ONE HOUR. DO NOT TOUCH HOT PARTS WITHOUT APPLICABLE GLOVES. HOT PARTS CAN CAUSE INJURIES TO PERSONNEL.

CAUTION:

DO NOT PUT FUEL THAT DRAINED FROM THE ENGINE BACK INTO THE FUEL SYSTEM. CONTAMINATION IN THE FUEL CAN CAUSE DAMAGE TO SOME PARTS.

CAUTION:

DO NOT GET FUEL ON THE ENGINE. REMOVE FUEL IMMEDIATELY WITH A LINT-FREE CLOTH. FUEL CAN CAUSE DAMAGE TO THE SURFACE PROTECTION OF SOME PARTS.

1. Open the right Fan Cowl Doors to gain access to the LP Fuel Filter (AMM TASK B787-A-R71-11-04-00B-540A-A).
2. Ensure the applicable fuel valve and spar valve are in the closed position.
   a. FUEL CONTROL SWITCH to the CUT OFF position and install a DO NOT OPERATE TAG.
   b. Push the ENG button on the Display Select Panel (DSP) on the glareshield (P55 panel).
      i. Ensure the following status messages are not seen.

         ENG FUEL VALVE L(R).

         FUEL SPAR VALVE L(R).
3. Drain the LP Fuel Supply from the FOHE drain plug (AMM TASK B787-A-R73-11-00-10D-228A-A).
4. Put a clean 19 litre (5 gall) fuel resistant container below the LP Fuel Filter Housing Drain Plug.
5. Remove the drain plug and allow the fuel to drain from the FOHE into the container.
6. Hold the end cover and remove the 5 attaching bolts and washers.
7. Carefully remove the end cover and filter from the FOHE ensuring that the filter does not fall as you do so.
8. Discard the filter element; drain plug seal ring and the end cover seal ring.
9. Put the applicable blanking caps and covers on all openings to prevent contamination.

© Rolls-Royce plc 2018. Use or disclosure is subject to the legend on the Notice to Holder page

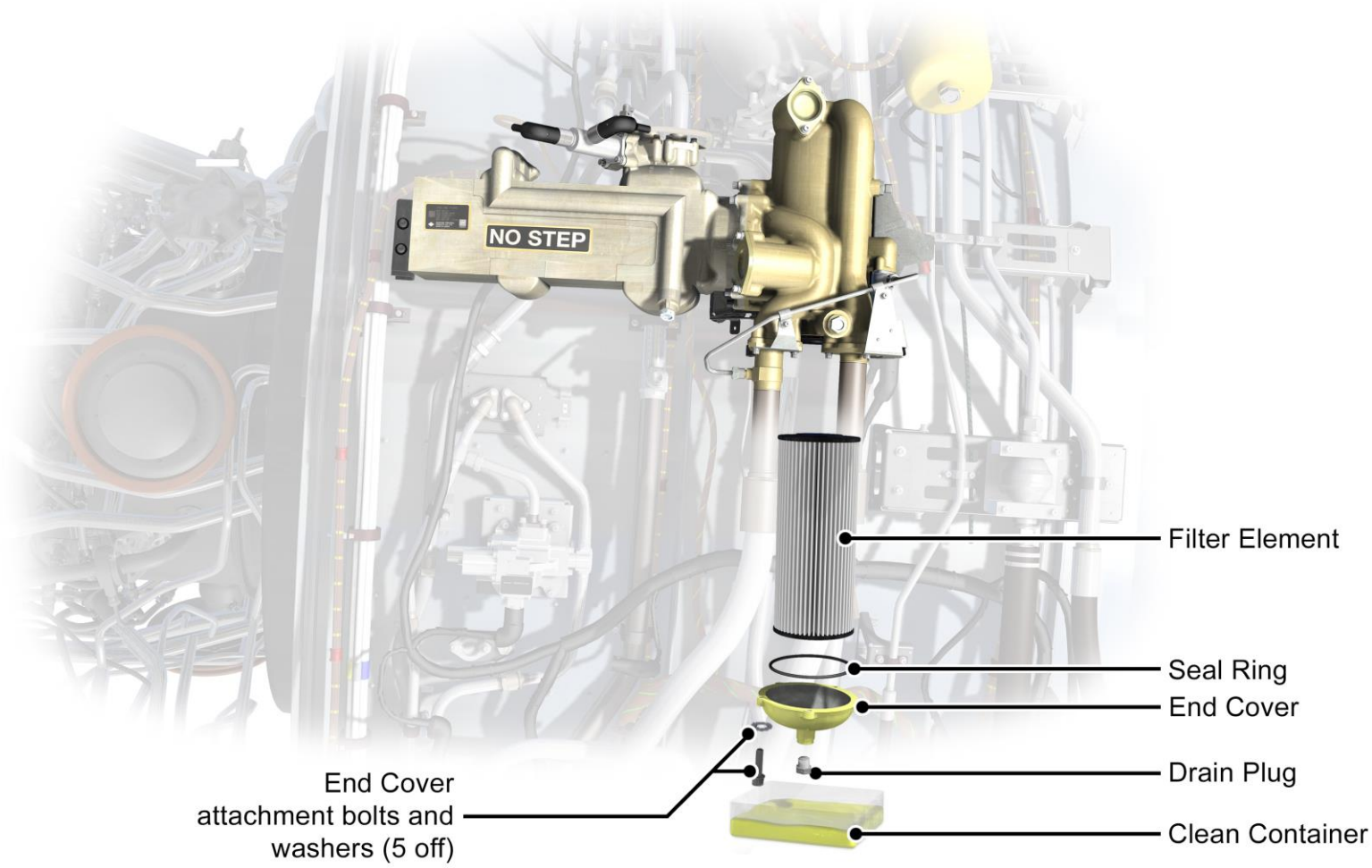

T1000 TEN_LBM_M08_159_01P

LP FUEL FILTER REMOVAL

© Rolls-Royce plc 2018. Use or disclosure is subject to the legend on the Notice to Holder page

Maintenance Practices.

LP Fuel Filter Removal and Replacement

The following is a brief description of these tasks. Refer to the AMM for the full description.

LP Fuel Filter Installation

AMM Task B787-A-R73-11-13-00B-720A-A

The Warnings and Cautions are the same as for the removal procedure.

1. Remove the blanking caps and covers from all of the openings on the FOHE.
2. Visually examine the inner area of the LP fuel filter housing for cleanliness and unwanted materials.
3. Clean the mating faces of the end cover and FOHE (AMM TASK B787-A-R70-20-01-00A-258A-A).
4. Install a seal ring to the end cover (AMM TASK B787-A-R70-02-01-00A-030A-A).
5. Lubricate the threads of the end cover attaching bolts (B787-A-R70-51-00-00A-950A-A).
6. Install a new LP Fuel Filter to the FOHE ensuring the bonded seal on the end of the filter engages correctly in the FOHE.
7. Install the end cover ensuring the filter element does not fall and that the bonded seal at the end of the filter element engages into its location on the end cover.
8. Attach the end cover to the FOHE with the five (5) bolts and washers.
9. Torque tighten the bolts to the torque values provided in the AMM.
10. Close the Fan Cowl Doors (AMM TASK B787-A-R71-11-04-00B-740A-A).
11. Remove the DO NOT OPERATE tag from the FUEL CONTROL SWITCH.
12. Carry out the applicable test for the filter element (AMM TASK B787-A-R71-00-00-14A-950A-A).

© Rolls-Royce plc 2018. Use or disclosure is subject to the legend on the Notice to Holder page

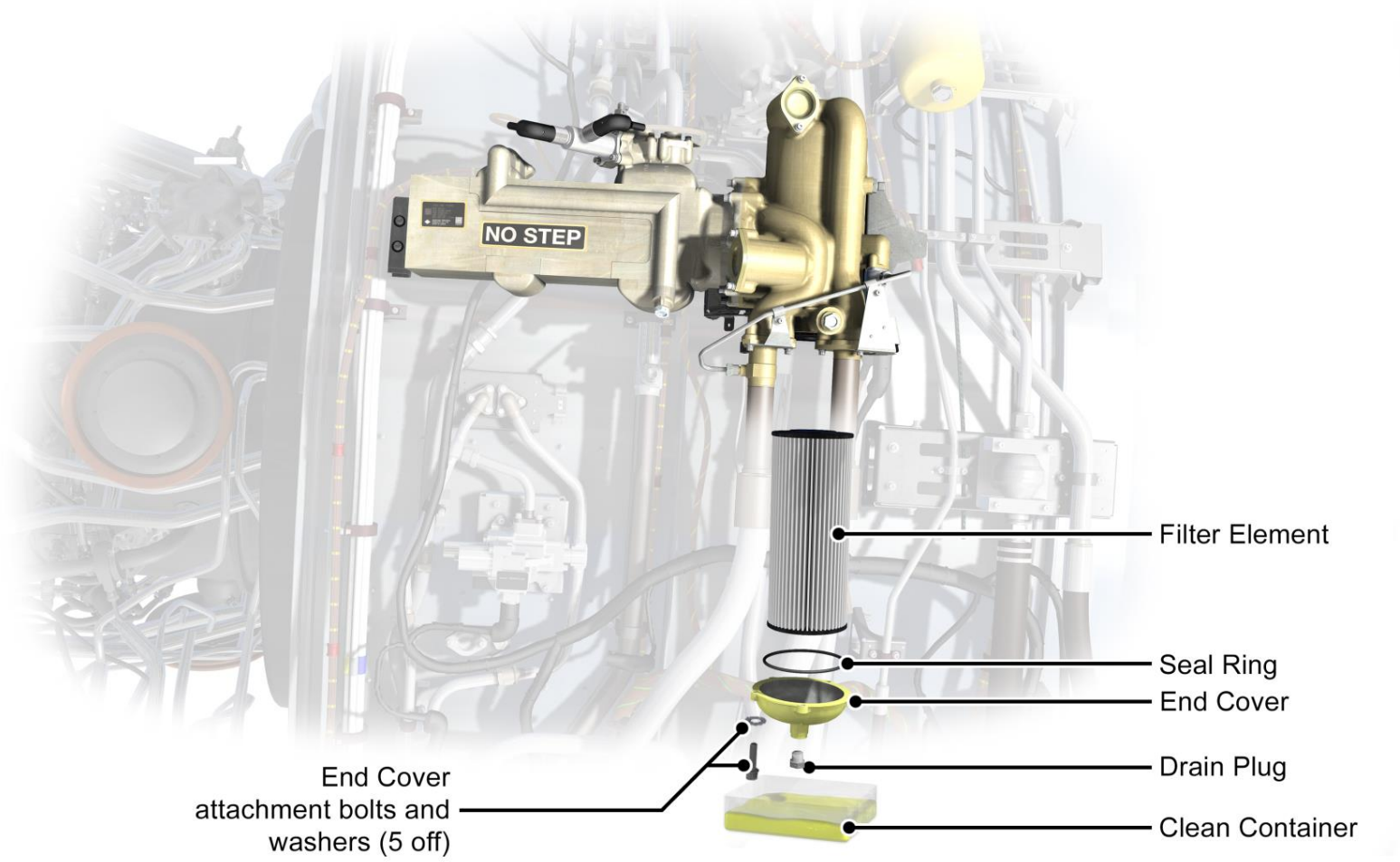

T1000 TEN_LBM_M08_159_01P

LP FUEL FILTER REPLACEMENT

© Rolls-Royce plc 2018. Use or disclosure is subject to the legend on the Notice to Holder page

Maintenance Practices.

HP Fuel Strainer Removal and Installation

The following is a brief description of these tasks. Refer to the AMM for the full description.

HP Fuel Strainer Removal.

AMM Task B787-A-R73-11-14-00B-520A-A

WARNING:

BE CAREFUL WHEN YOU DO WORK ON THE ENGINE PARTS AFTER THE ENGINE IS STOPPED. THE ENGINE CAN STAY HOT FOR ALMOST ONE HOUR. DO NOT TOUCH HOT PARTS WITHOUT APPLICABLE GLOVES. HOT PARTS CAN CAUSE INJURIES TO PERSONNEL.

CAUTION:

DO NOT PUT FUEL THAT DRAINED FROM THE ENGINE BACK INTO THE FUEL SYSTEM. CONTAMINATION IN THE FUEL CAN CAUSE DAMAGE TO SOME PARTS.

CAUTION:

DO NOT GET FUEL ON THE ENGINE. REMOVE FUEL IMMEDIATELY WITH A LINT-FREE CLOTH. FUEL CAN CAUSE DAMAGE TO THE SURFACE PROTECTION OF SOME PARTS.

1. Ensure the applicable fuel valve and spar valve are in the closed position.
   a. FUEL CONTROL SWITCH to the CUT OFF position and install a DO NOT OPERATE TAG (P10 panel).
   b. Push the ENG button on the Display Select Panel (DSP) on the glareshield (P55 panel).
      i. Ensure the following status messages do not show:
         ii. ENG FUEL VALVE L(R).
         iii. FUEL SPAR VALVE L(R).
2. Ensure the Thrust Reverser has been de-activated for maintenance.
3. Open the Fan Cowl Doors (AMM TASK B787-A-R71-11-04-00B-540A-A).
4. Open the Thrust Reverser for access (AMM TASK B787-A-R73-31-00-20B-540A-A).
5. Drain the fuel from the HP Fuel Supply (AMM TASK B787-A-R73-11-00-09A-228A-A).
6. Place a clean fuel resistant container in position below the HP Filter Housing.
7. Disconnect the Filter Housing inlet tube (AMM TASK B787-A-R70-12-06-00A-520A-A) and discard the seal rings.
8. Hold the filter housing and remove the bolts that attach it to the fuel manifold and discard the seal ring.
9. Loosen the filter captive bolt and remove the filter from the filter housing.
10. Install the relevant blanking caps and covers.
11. Carry out an inspection of the mating faces, external and internal surfaces of the tube(s) (AMM TASK B787-A-R70-12-06-00A-520A-A).

© Rolls-Royce plc 2018. Use or disclosure is subject to the legend on the Notice to Holder page

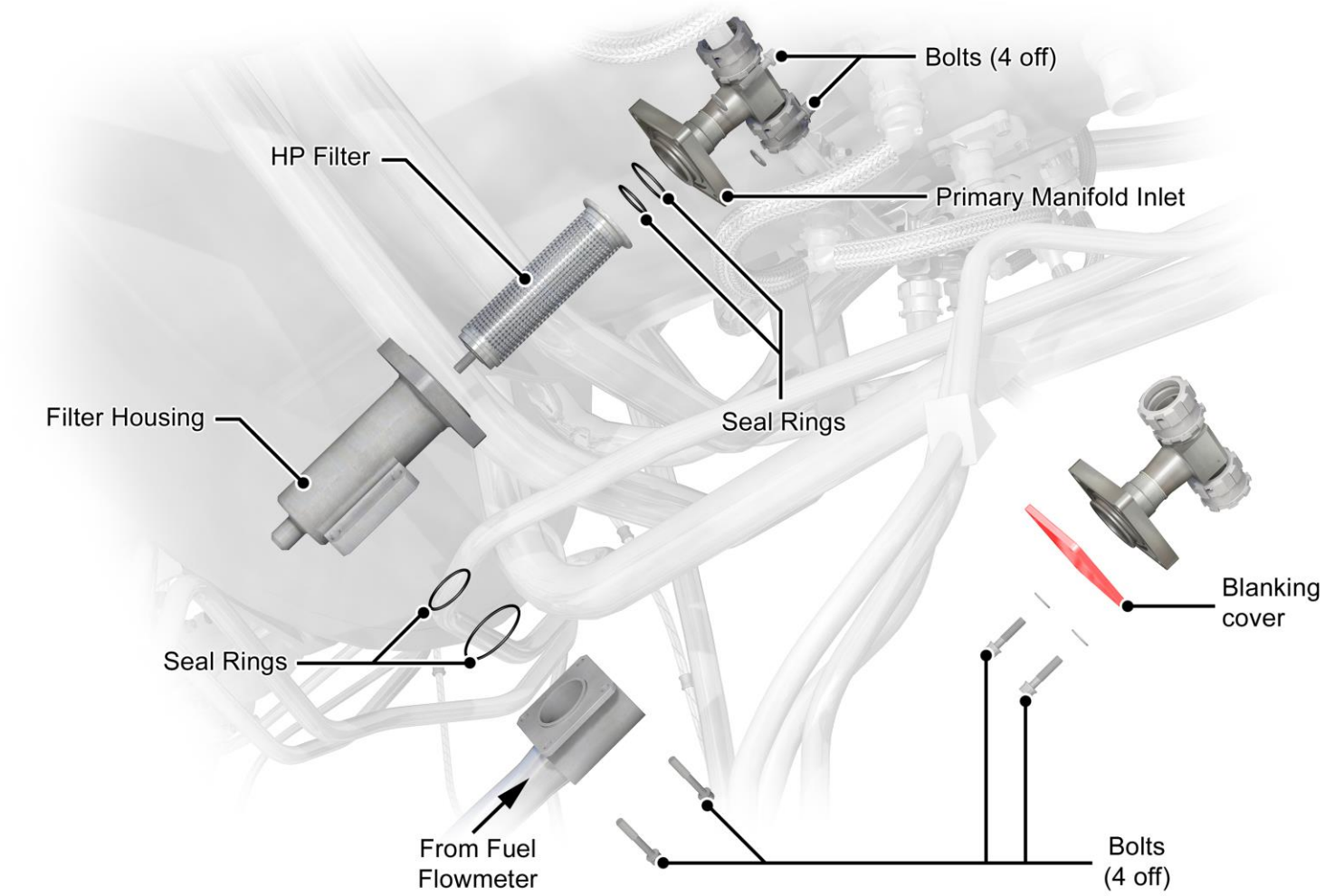

T1000 TEN_LBM_M08_160_01P

HP FUEL STRAINER REMOVAL

© Rolls-Royce plc 2018. Use or disclosure is subject to the legend on the Notice to Holder page

Maintenance Practices.

HP Fuel Strainer Cleaning

The following is a brief description of these tasks. Refer to the AMM for the full description.

AMM Task B787-A-R73-11-14-00A-253A-A – Ultrasonic Cleaning

WARNING:

OBEY THE MANUFACTURERS HEALTH AND SAFETY DATA FOR THE MATERIALS. ALSO REFER TO LOCAL REGULATIONS TO MAKE SURE THAT UOU DO THE PROCEDURES SAFELY. IF YOU DO NOT OBEY THE PROCEDURES FOR THESE MATERIALS, INJURIES TO PERSONNEL CAN OCCUR.

1. Clean the strainer as quickly as possible after removal. If this cannot be done place in a plastic bag and seal the bag to keep the strainer moist to prevent oxidation.
2. Check the number of times the strainer has been cleaned. The number of triangles with a number 1 inside indicates this as follows:
   a. If there are two (2) triangular marks then discard the strainer.
   b. If there are less than two (2) triangular marks, clean the strainer.
3. Put the strainer into a clean 19 litre (5 gall) container and soak in kerosene, white spirit or cleaning solvent for between 30 minutes and 2 hours.
4. After soaking for the recommended time remove the strainer and shake to remove the solvent.
5. Place the strainer into a clean fuel/oil resistant non-metallic beaker with clean solvent (Kerosene, White Spirit or Cleaning Solvent) and place into the ultrasonic cleaner for 5 minutes.
6. Remove the beaker from the ultrasonic cleaner.
7. Remove the strainer from the beaker and shake the strainer to remove the solvent.
8. Repeat steps 5 to 7 above.
9. Inspect the strainer with a 15 times magnifying lens for contamination.
10. If contamination is found, clean the strainer again.
11. If no contamination is found engrave a triangle with a number One (1) inside (as below) to indicate the strainer has been cleaned.

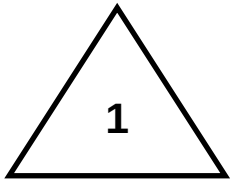

12. Immediately after cleaning install the strainer. If this is not possible put the strainer in a plastic bag. Seal the bag and place in a suitable storage container with the date the strainer was cleaned.

© Rolls-Royce plc 2018. Use or disclosure is subject to the legend on the Notice to Holder page

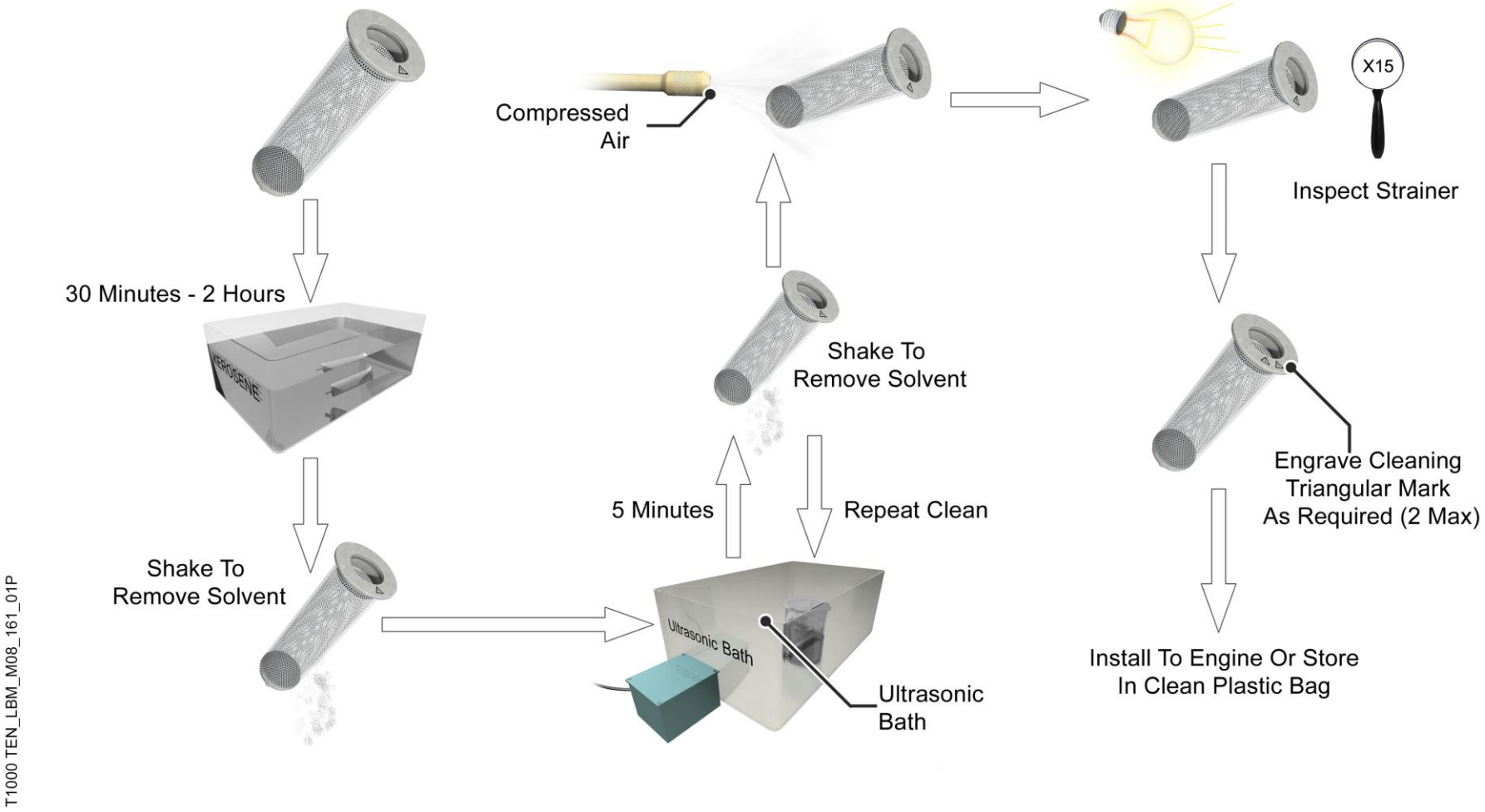

HP FUEL STRAINER CLEANING

© Rolls-Royce plc 2018. Use or disclosure is subject to the legend on the Notice to Holder page

Maintenance Practices.

HP Fuel Strainer Removal and Installation

The following is a brief description of these tasks. Refer to the AMM for the full description.

HP Fuel Strainer Installation.

AMM Task B787-A-R73-11-14-00B-720A-A

WARNING:

BE CAREFUL WHEN YOU DO WORK ON THE ENGINE PARTS AFTER THE ENGINE IS STOPPED. THE ENGINE CAN STAY HOT FOR ALMOST ONE HOUR. DO NOT TOUCH HOT PARTS WITHOUT APPLICABLE GLOVES. HOT PARTS CAN CAUSE INJURIES TO PERSONNEL.

1. Ensure the filter element to be installed has been cleaned I.A.W the AMM.
2. Remove all blanking covers and caps from the fuel tubes, filter housing and manifold inlet.
3. Lubricate all the attaching bolts (AMM TASK B787-A-R70-51-00-00A-950A-A).
4. Clean the mating faces of the Strainer housing and the fuel manifold inlet (AMM TASK B787-A-R70-20-01-00A-258A-A).
5. Install new seal rings to the fuel manifold inlet and the filter housing inlet tube (AMM TASK B787-A-R70-02-01-00A-030A-A).
6. Inspect the HP Fuel Strainer for any unwanted materials and ensure the captive bolt is securely fastened to the HP Filter.
7. Make sure the captive bolt is correctly swaged onto the filter.
8. Install the Strainer into the filter housing and tighten the captive bolt to the torque values found in the AMM (TASK B787-A-R70-51-00-00A-950A-A).
9. Put the Strainer housing in position and connect to the fuel manifold inlet and the Strainer housing inlet tube.
10. Tighten the attaching bolts to the torque values found in the AMM (TASK B787-A-R70-51-00-00A-950A-A).
11. Ensure the HP Fuel System Drain Plug is installed and ensure the tubes installed or connected have the correct clearance (AMM TASK B787-A-R70-12-06-00A-720A-A).
12. Ensure the work area is clean and clear of tools and equipment.
13. Close the Thrust Reverser (AMM TASK B787-A-R78-31-00-20B-740A-A).
14. Close the Fan Cowl Doors (AMM TASK B787-A-R71-11-04-00B-740A-A).
15. Activate the Thrust Reverser after maintenance (AMM Task B787-A-R78-31-00-20G-730B-A).
16. Remove the DO NOT OPERATE tag from the FUEL CONTROL SWITCH.
17. Carry out the applicable test for the HP filter element (AMM TASK B787-A-R71-00-00-14A-950A-A).

© Rolls-Royce plc 2018. Use or disclosure is subject to the legend on the Notice to Holder page

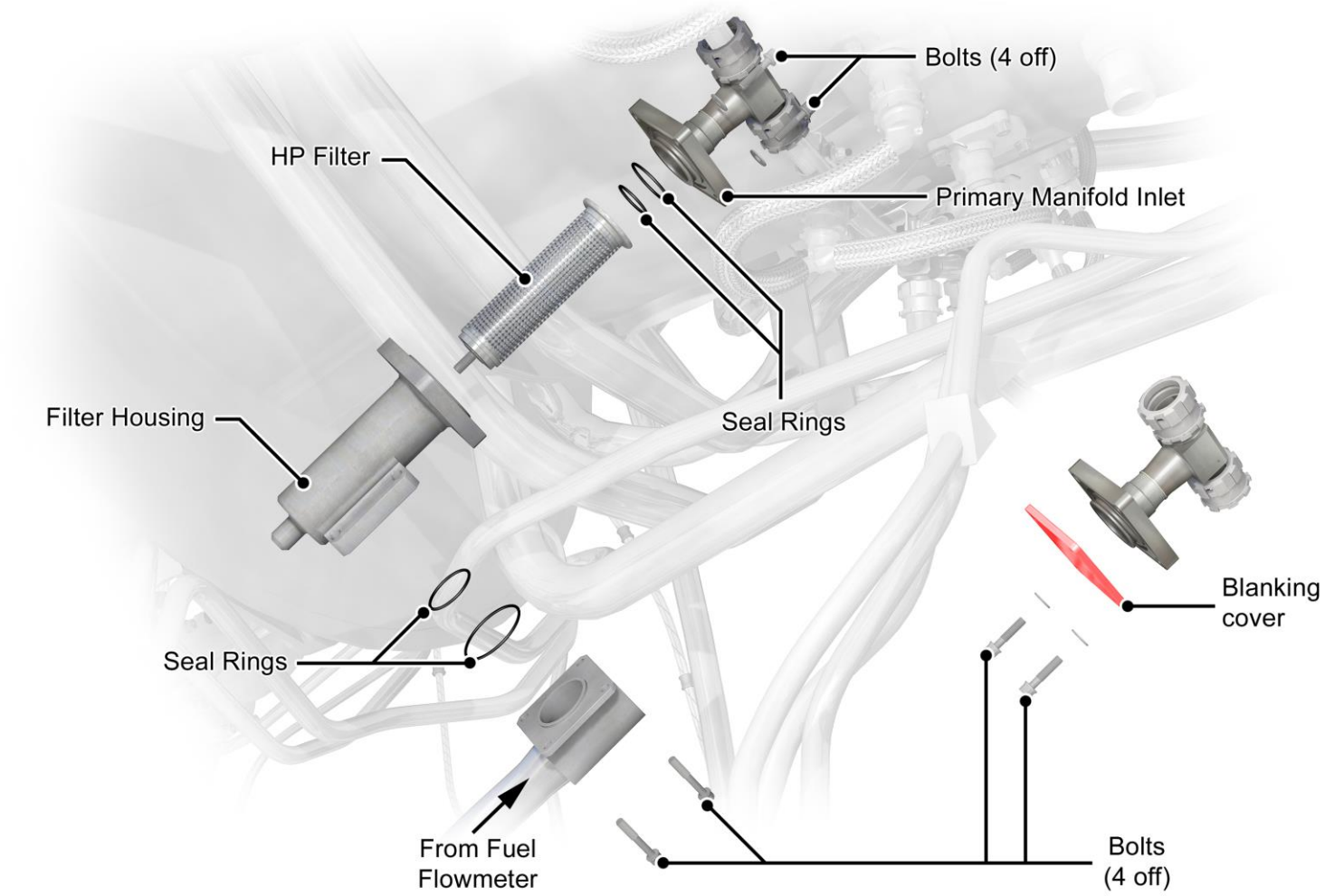

T1000 TEN_LBM_M08_162_01P

HP FUEL STRAINER INSTALLATION

© Rolls-Royce plc 2018. Use or disclosure is subject to the legend on the Notice to Holder page

Maintenance Practices.

HMU Removal and Installation

The following is a brief description of these tasks. Refer to the AMM for the full description.

HMU Removal

AMM Task B787-A-R73-21-13-00A-520A-A

CAUTION:
DO NOT USE PLIERS WITH METAL JAWS TO LOOSEN ELECTRICAL CONNECTORS. THE METAL JAWS WILL CAUSE DAMAGE TO THE CONNECTORS.

CAUTION:

DO NOT BEND ELECTRICAL HARNESSES TOO MUCH WHEN YOU DISCONNECT AND CONNECT THE ELECTRICAL CONNECTORS. THIS CAN CAUSE ELECTRICAL CIRCUIT MALFUNCTIONS. IF YOU BEND THEM TOO MUCH, DAMAGE TO THE HARNESSES CAN OCCUR.

1. Ensure the fuel valve and spar valve are in the closed position.
   a. FUEL CONTROL SWITCH to the CUT OFF position and install a DO NOT OPERATE TAG. (P10 panel).
   b. Push the ENG button on the Display Select Panel (DSP) on the glareshield (P55 panel).
      i. Ensure the following status messages do not show:
      ii. ENG FUEL VALVE L(R).
      iii. FUEL SPAR VALVE L(R).
2. De-activate the Thrust Reverser.
3. Open the Fan Cowl Doors (AMM TASK B787-A-R71-11-04-00B-540-A).
4. Open the Thrust Reverser for access (AMM TASK B787-A-R78-31-00-20B-540A-A).
5. Drain the fuel from the HP Fuel Supply (AMM TASK B787-A-R73-11-00-09A-228A-A).
6. Disconnect the electrical connectors and fit blanking caps.
7. Place a clean one (1) gallon fuel resistant container to catch any fuel that may drain during removal of the HMU.
8. Remove the HMU to Fuel Flowmeter fuel tube. (AMM TASK B787-A-R70-12-06-00A-520A-A) and discard the seal ring but keep the seal plate.
9. Fit blanking caps as required.
10. Disconnect the remaining tubes from the HMU.
11. Hold the HMU and remove the two (2) bolts and spacers from the front face of the HMU and the four (4) bolts and washers from the forward (gearbox side) face of the HMU.
12. Carefully remove the HMU from the engine.

Note: The HMU weighs approximately 11.3 kg (25lb).

13. Remove and discard the rubber seal ring.
14. Remove the three plastic seal rings using a soft-faced tool and keep them for the installation.
15. Fit blanking caps to the all-open apertures.
16. Inspect and protect all tubes I.A.W the AMM (TASK B787-A-R70-12-06-00A-520A-A).

© Rolls-Royce plc 2018. Use or disclosure is subject to the legend on the Notice to Holder page

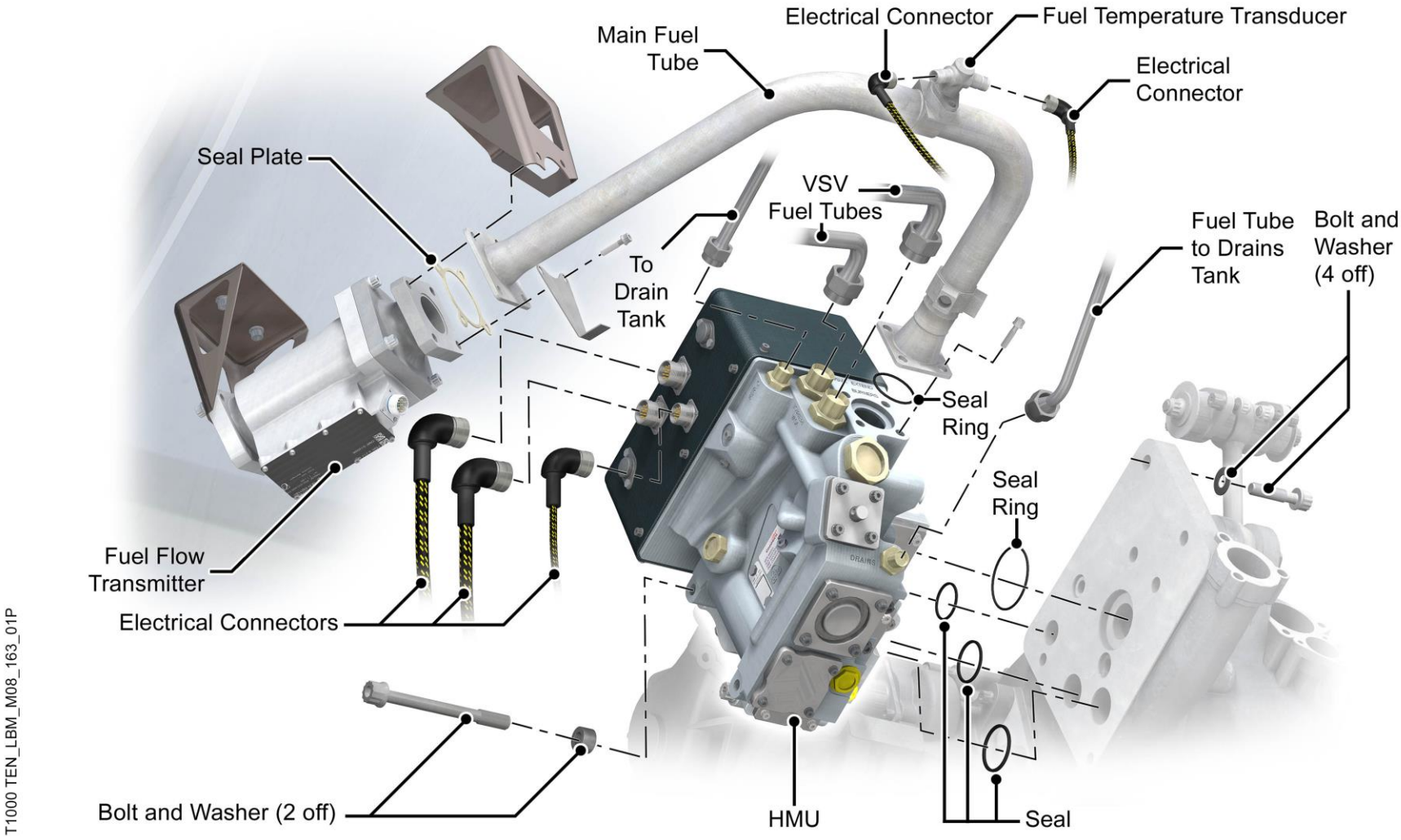

HMU REMOVAL

© Rolls-Royce plc 2018. Use or disclosure is subject to the legend on the Notice to Holder page

Maintenance Practices.

HMU Removal and Installation

The following is a brief description of these tasks. Refer to the AMM for the full description.

HMU Installation

AMM Task B787-A-R73-21-13-00A-720A-A

1. Remove the blanking caps from the external gearbox fuel manifold and inspect the apertures for cleanliness and unwanted objects and material.
2. Remove the blanking caps from the VSV and fuel drains tank tube connectors and lubricate I.A.W the AMM.
3. Clean the external gearbox fuel manifold and HMU mating faces to ensure the HMU is grounded correctly. (AMM TASK B787-A-R70-20-01-00A-258A-A).
4. Install the plastic seals and a new rubber seal ring to the HMU. (AMM TASK B787-A-R70-02-01-00A-030A-A).
5. Install the HMU to the external gearbox fuel manifold and install the two (2) bolts and washers to the front face of the HMU and the four (4) bolts and washers to the forward (gearbox side) face of the HMU.

Note: The HMU weighs approximately 11.3kg (25lb).

6. Tighten the bolts to the torque values in the AMM (TASK B787-A-R70-51-00-00A-950A-A).

CAUTION:

DO NOT MOVE THE COMPONENT WHEN IT IS IN ITS POSITION ON THE RELEATED MATING FACE. THE MOVEMENT CAN CAUSE DAMAGE TO THE MATING FACES AND LEAKAGE CAN OCCUR.

7. Install the VSV and fuel drains tank tubes and torque tighten to the values in the AMM.
8. Lubricate the HMU to Fuel Flowmeter tube attachment bolts (AMM TASK B787-A-R70-51-00-00A-950A-A).
9. Remove the blanking caps and install the HMU to Fuel Flowmeter fuel tube.
10. Install the electrical connectors (AMM TASK B787-A-R70-50-02-00A-730A-A).
11. Ensure the work area is clean and clear of tools and equipment.
12. Return the airplane to a serviceable condition.
13. Carry out the applicable test for the HMU (AMM TASK B787-A-R71-00-00-14A-950A-A).

© Rolls-Royce plc 2018. Use or disclosure is subject to the legend on the Notice to Holder page

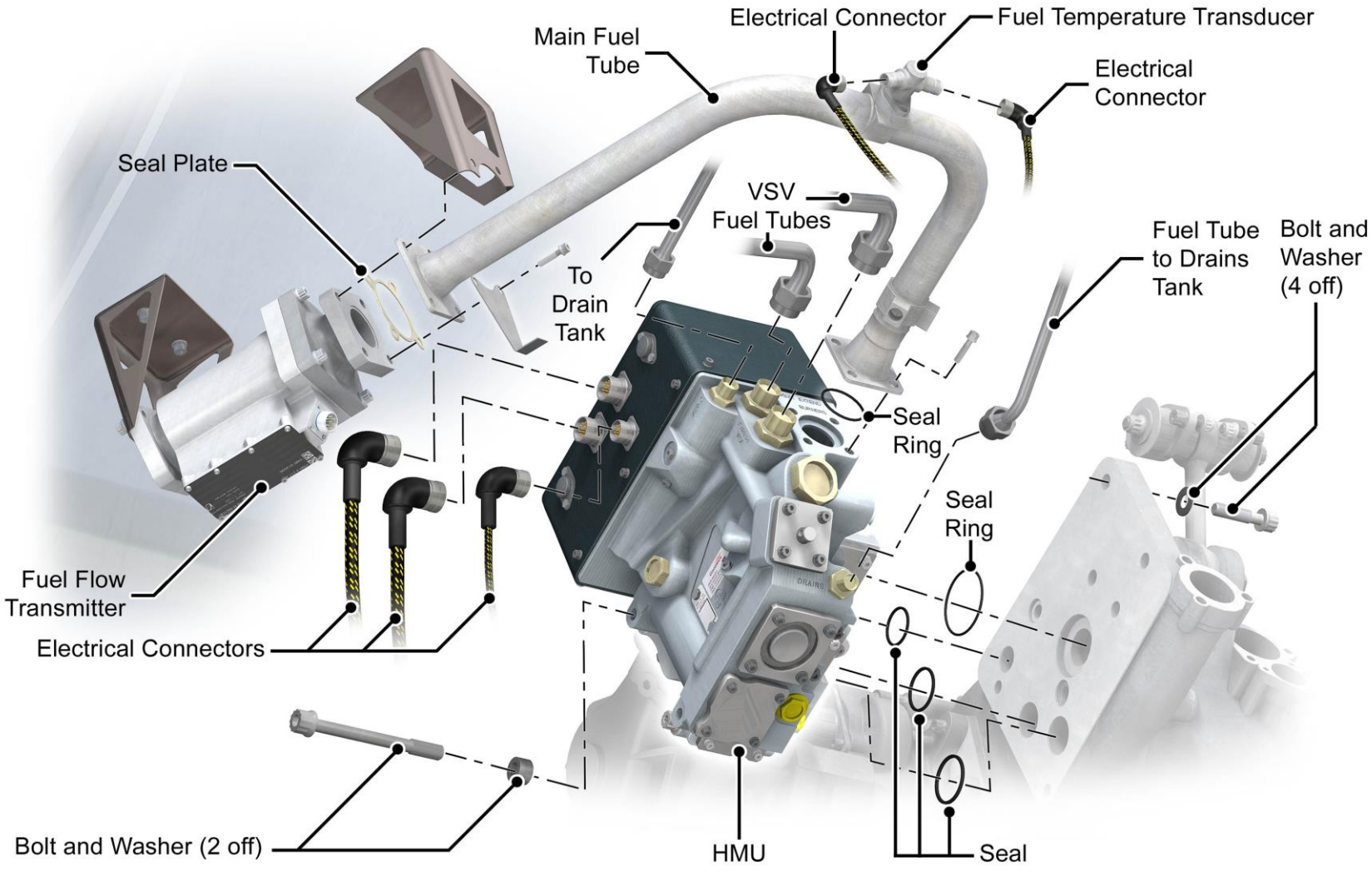

T1000 TEN_LBM_M08_164_01P

HMU INSTALLATION

© Rolls-Royce plc 2018. Use or disclosure is subject to the legend on the Notice to Holder page

On Board Maintenance – Ground or Initiated Tests

Introduction

The Initiated tests provide a means by which the maintenance personnel can conduct Engine related tests in a safe and controlled manner. The test called up is to be carried out when directed by the relevant AMM of FIM procedure.

Test Structure

The Central Maintenance Computing Function (CMCF) will generate screens to guide the operator though in the following test steps:

- Test Set-Up (indicate to the operator any necessary warnings, switch selections and instructions required to carry out the test in a safe manor).
- Test In-Progress (Indicates that the test is currently being carried out (operating) – a STOP TEST option is available if required at this point).
- Test Close-Up (switch selections and instructions required to return the system to its original condition).
- Fault Reporting (indicates Passed or Failed condition).

Below is an indication of the Fuel Metering Valve System Test, AMM Task B787-A-R71-00-00-29B-300B-A, together with an explanation of the test capabilities.

Note: See the Troubleshooting section for more details on access and conducting Ground Tests.

© Rolls-Royce plc 2018. Use or disclosure is subject to the legend on the Notice to Holder page

Test Name
EEC SYSTEM TEST CHANNEL A
EEC SYSTEM TEST CHANNEL B
ESS ANTI-ICE SYSTEM
FUEL METERING VALVE SYSTEM CHANNEL A
FUEL METERING VALVE SYSTEM CHANNEL B
FUEL RETURN TO TANK VALVE
HANDLING BLEED VALVE SYSTEMS CHANNEL A
HARNESS CHANNEL A
HARNESS CHANNEL B
IGNITION SYSTEM CHANNEL A
IGNITION SYSTEM CHANNEL B
MODULATED AIR SYSTEM
P20/T20 PROBE HEATER
OIL BYPASS VALVE SYSTEM CHANNEL A
OIL BYPASS VALVE SYSTEM CHANNEL B
OIL DEBRIS MONITORING SYSTEM RESET CHANNEL A
OIL DEBRIS MONITORING SYSTEM RESET CHANNEL B
SECONDARY AIR SYSTEM
TURBINE CASE COOLING ACTUATION SYSTEM
THRUST REVERSER INTERLOCK SOLENOID
VFSG THERMAL BYPASS VALVE
VARIABLE STATOR VANE SYSTEM CHANNEL A
VARIABLE STATOR VANE SYSTEM CHANNEL B
VFSG AOHE AIR CONTROL VALVE SYSTEM CHANNEL A
VFSG AOHE AIR CONTROL VALVE SYSTEM CHANNEL B

The Fuel Metering Valve Test dry motors the engine to produce motive fuel flow that schedules the FMV to different positions to determine if it is operating correctly. The Fuel Metering Valve LVDT passes feedback of the FMV movements to the enable the EEC to compare the valve movement against a time schedule.

The Fuel Return to Tank Valve initiated test is not applicable to the Trent 1000-TEN.

T1000 TEN_LBM_M08_165_01P

© Rolls-Royce plc 2018. Use or disclosure is subject to the legend on the Notice to Holder page

Flight Deck Effects

Introduction

Below is an indication of the associated Flight Deck Effect (FDE) messages for this section (Fuel) together with the message type (level), an explanation of its meaning, dispatch restrictions (if any) and expected actions taken by flight or ground crew.

Note: This is for your guidance only. Due to the nature of the aircraft and engines continual development these may change and Rolls Royce cannot guarantee that they are still current and fully accurate. As such, always refer to the appropriate AMM procedure for reference.

© Rolls-Royce plc 2018. Use or disclosure is subject to the legend on the Notice to Holder page

Message	Type	Dispatch	Meaning	Crew Action
FUEL ENG RTT VLV CLOSED L (R)	Status	Time Limited Dispatch (If FRTTV installed)	Left (Right) Engine mounted Fuel return To Tank Valve failed to the closed position when commanded open or has lost RPDU power.	None
FUEL ENG RTT VLV OPEN L (R)	Status	Do Not Dispatch (If FRTTV installed)	Left (Right) Engine mounted Fuel Return To Tank Valve failed to the open position.	Do not dispatch if SPAR RTT VALVE L (R) message is displayed.
FUEL ENG RTT VLV SNSR L (R)	Status	Time Limited Dispatch (If FRTTV installed)	Left (Right) Engine mounted Fuel Return to Tank Valve position sensor failed.	None
ENG FAIL	Warning	NA	An Engine failure condition has been detected during take-off roll prior to V1.	Perform Rejected Take Off procedure.
ENG THRUST HIGH L (R)	Warning	Do Not Dispatch	The Left (Right) Engine Secondary Air System Valve has failed open and thrust is above operating limits.	Pull back thrust below TPR or N1 target.
ENG FAIL L (R)	Caution	Do Not Dispatch	The Left (Right) Engine has flamed out and run down below idle speed.	Shutdown the engine. The engine may be re-started if there is no apparent damage.
ENG LIMIT EXCEED L (R)	Caution	NA	Left (Right) engine N1, N2, N3 or EGT have exceeded an operating limit.	Reduce Thrust until parameter is within operating limits. Shutdown the engine if parameter does not come back within limits.
ENG LIMIT PROT L (R)	Caution	NA	Left (Right) engine is in Hard Reversion as selected by the EEC Mode Switch and N1 Command is >2% above Max N1.	Retard Thrust Lever until message clears & N1 remains within limits.

T1000 TEN_LBM_M08_166_01P

© Rolls-Royce plc 2018. Use or disclosure is subject to the legend on the Notice to Holder page

Message	Type	Dispatch	Meaning	Crew Action
ENG FUEL FILTER L (R)	Caution	NA	Both left and right engines Fuel Systems have an impending or actual bypass of the Fuel Filter and/or Fuel Oil Heat Exchanger (FOHE).	Land the airplane at the nearest suitable airport.
ENGINE SURGE L (R)	Caution	NA	Left (Right) Engine EEC has detected multiple surges or sustained stall.	Retard Thrust Lever until condition and message clears. Shutdown the engine if the condition remains. If conditions stabilise slowly advance the thrust lever monitoring engine indications and operate at a surge and stall free condition.
ENG THRUST L (R)	Caution	NA	Left (Right) Engine is not producing commanded Thrust or not responding normally to changes in thrust command.	Flight Crew Awareness.
ENG CONTROL L (R)	Advisory	Do Not Dispatch	Left (Right) Engine Control is in a 'No Dispatch' configuration and may be operating with a limited set of engine control parameters and is not capable of controlling all aspects of the engine.	Do Not take Off.
EEC MODE L (R)	Advisory	Time Limited Dispatch	EEC is in Alternate Control Mode (either by default or manually).	Retard Thrust levers to Mid position and configure both engines to Alternate Mode. Dispatch per MMEL.
ENG FUEL FILTER L (R)	Advisory	NA	Left (Right) Engine Fuel Filter is blocked and fuel is bypassing.	In Flight - Crew Awareness On Ground - No Dispatch
ENG FUEL VALVE L (R)	Advisory	Do Not Dispatch	Left (Right) Engine Fuel Spar Valve disagrees with commanded position or shut off coil is faulty.	Prior to engine start - Do Not Dispatch and Do Not start engine.
ENG IDLE DISAGREE	Advisory	Time Limited Dispatch	One engine is operating at Approach Idle and the other engine is operating at Minimum Idle.	Flight Crew Awareness. On Ground - Dispatch per MMEL.

T1000 TEN_LBM_M08_167_01

© Rolls-Royce plc 2018. Use or disclosure is subject to the legend on the Notice to Holder page

Message	Type	Dispatch	Meaning	Crew Action
ENG RPM LIMITED	Advisory	NA	Engine is running at 1% below Engine Red Line for 10 seconds.	Crew Awareness.
ENG CONTROL L (R)	Status	NA	Left (Right) EEC is in a 'No Dispatch' configuration and may be operating with a limited set of control parameters and may not be capable of controlling the engine.	None.
ENG EEC C1 L (R)	Status	Time Limited Dispatch	Engine control system is operating with reduced redundancy or EEC data from one channel is not available.	None.
ENG EEC MODE L (R)	Status	Time Limited Dispatch	EEC is in alternate mode due to loss of air data or signals that contribute to TPR calculations. Message is set when the EECS Fault is dispatchable.	Dispatch per MMEL.
ENG EEC OVHT L (R)	Status	Do Not Dispatch	EEC internal temperature has been exceeded.	None.
ENG FUEL FILTER L (R)	Status	Do Not Dispatch	Differential pressure across the LP Fuel Filter indicates an impending bypass condition while the engine is at or above idle.	None.
ENG FUEL FILTER SENSOR L (R)	Status	Time Limited Dispatch	LP Fuel Filter Differential Pressure Transducer has failed.	None Dispatch per MMEL.
ENG FUEL VALVE L (R)	Status	Time Limited Dispatch	Left (Right) Engine fuel valve measured position disagrees with the commanded position or the pilot shutoff coil is detected as faulty by fuel shutoff via the protection coils.	None Dispatch per MMEL.
ENG OVSPD PROT SYS L (R)	Status	Do Not Dispatch	Left (Right) Engine has lost its overspeed function.	None.
ENG TCMA L (R)	Status	Time Limited Dispatch	Left (Right) Engine has lost its TCMA function.	Dispatch per MMEL.
ENG TURB OVSPD SYS L (R)	Status	Time Limited Dispatch	Left (Right) Engine has lost its shaft break protection function. The EEC sets the indication if the speed signals used by the shaft protection function are faulty.	Dispatch per MMEL.

T1000 TEN_LBM_M08_168_01P

© Rolls-Royce plc 2018. Use or disclosure is subject to the legend on the Notice to Holder page

Fuel System Reference Wiring Diagrams

Introduction

Below is a wiring schematic of the associated units connected to the EEC. This is only a representation of the actual connectors but all plugs and connectors are indicated with the reference identifiers. This should be used for reference only and not be used as a definitive document. For a more detailed explanation (pins and sockets for troubleshooting purposes etc) and for further details, then always refer to the actual wiring diagrams as given within the AMM or FIM electronic documentation.

© Rolls-Royce plc 2018. Use or disclosure is subject to the legend on the Notice to Holder page

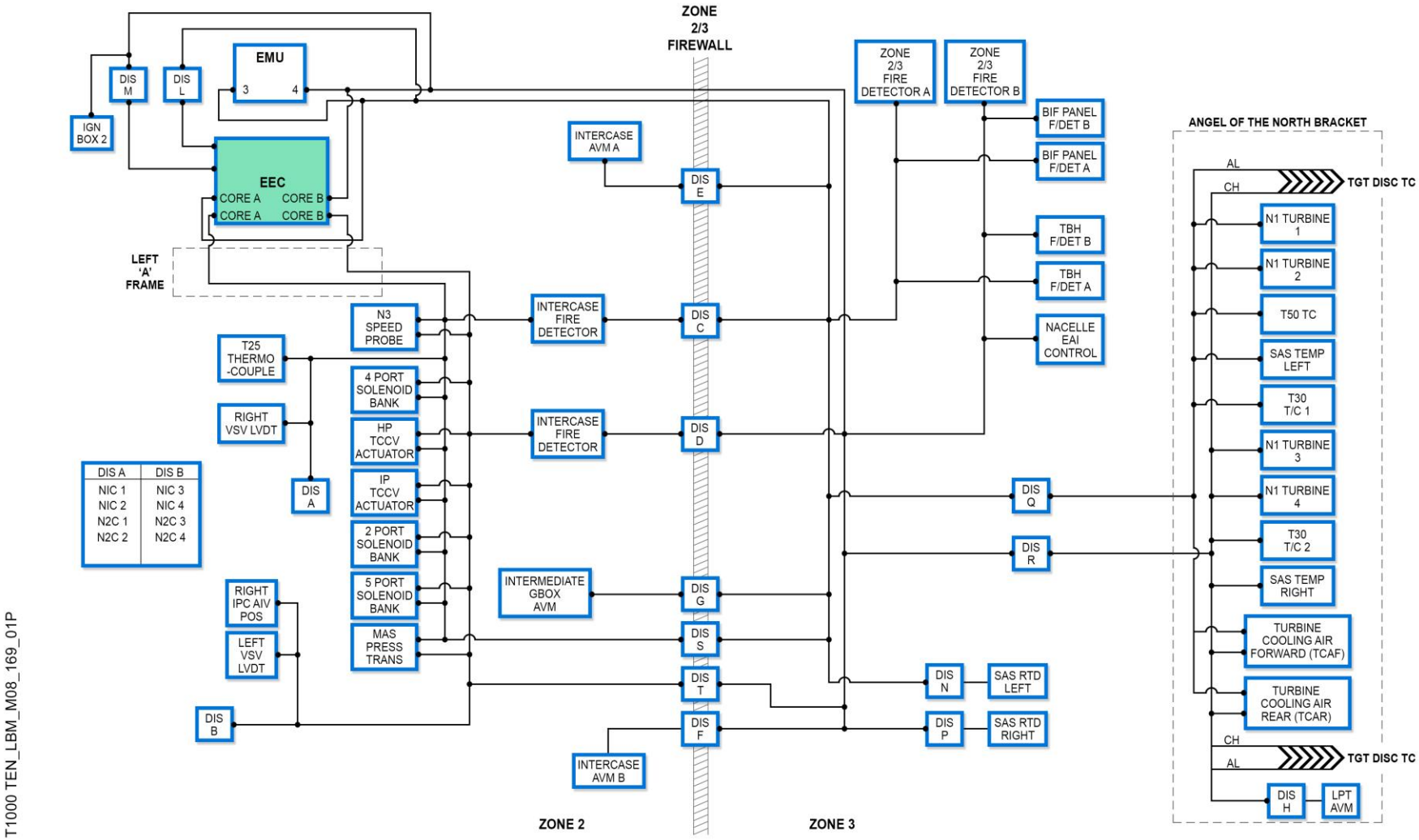

FUEL SYSTEM WIRING DIAGRAM - 1

© Rolls-Royce plc 2018. Use or disclosure is subject to the legend on the Notice to Holder page

Fuel System Reference Wiring Diagrams

Introduction

Below is a wiring schematic of the associated units connected to the EEC. This is only a representation of the actual connectors but all plugs and connectors are indicated with the reference identifiers. This should be used for reference only and not be used as a definitive document. For a more detailed explanation (pins and sockets for troubleshooting purposes etc) and for further details, then always refer to the actual wiring diagrams as given within the AMM or FIM electronic documentation.

© Rolls-Royce plc 2018. Use or disclosure is subject to the legend on the Notice to Holder page

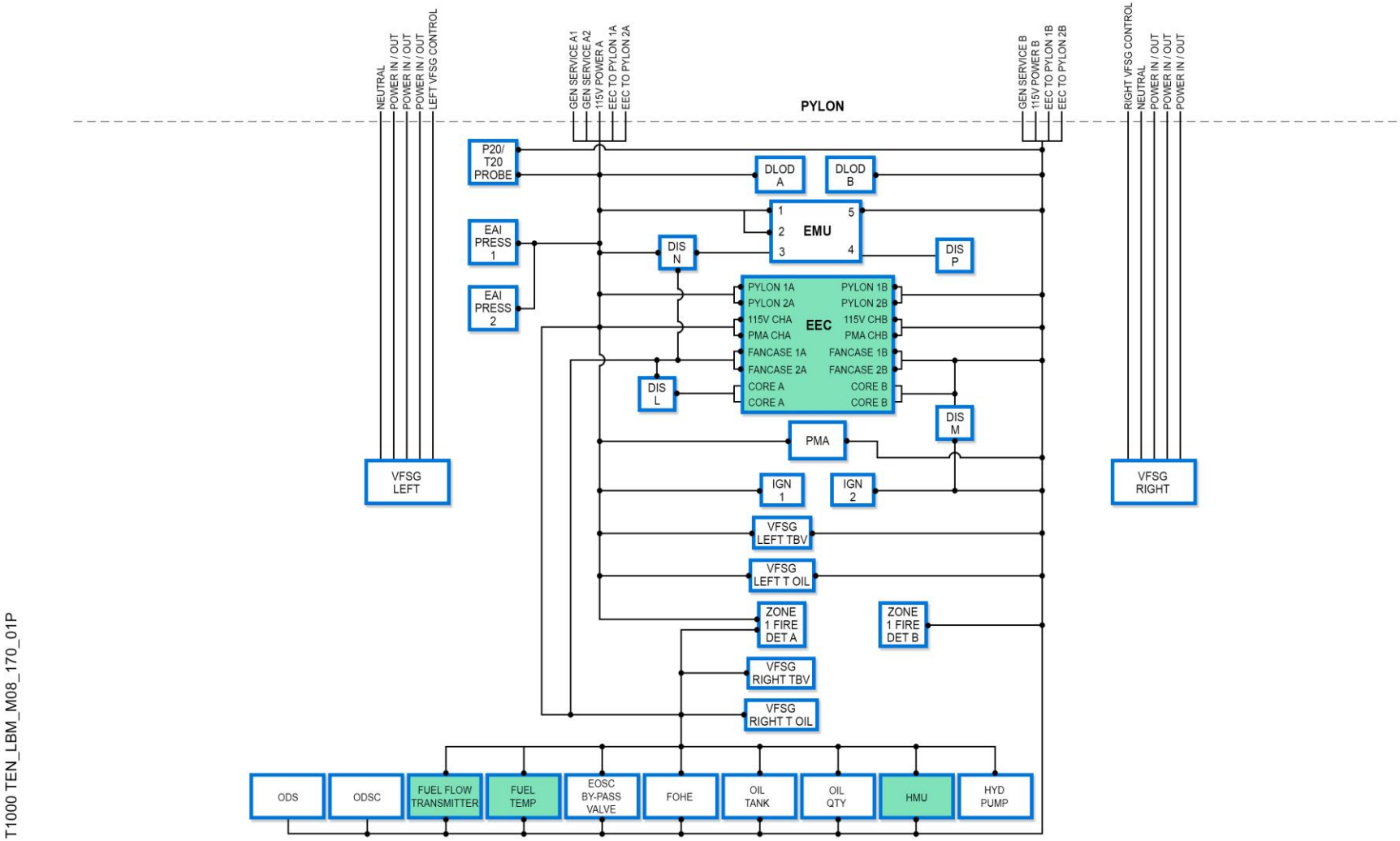

T1000 TEN_LBM_M08_170_01P

FUEL SYSTEM WIRING DIAGRAM - 2

© Rolls-Royce plc 2018. Use or disclosure is subject to the legend on the Notice to Holder page

END OF SECTION

Section 9 - Airflow Control System

ATA Chapter Covered:

75

© Rolls-Royce plc 2018. Use or disclosure is subject to the legend on the Notice to Holder page

Airflow Control System Introduction

Description

The engine compressor system is designed to produce high-pressure ratios in the higher RPM range where the engine normally operates.

In the lower RPM range, the airflow through the IP and HP compressors becomes unstable especially during acceleration and deceleration. It is therefore necessary to have airflow control devices to provide stable compressor airflow during starting and lower power operation.

Engine Airflow Control

The airflow control system consists of:

- The EEC to control the airflow control system.
- One stage of Variable Inlet Guide Vanes (VIGVs) at the inlet to the IP compressor.
- Two stages of Variable Stator Vanes (VSVs).
- Three IP8 bleed valves.
- Two HP3 bleed valves.
- Bleed Valve solenoids found within two of the three solenoid banks.

VIGV/VSV System

The VIGVs and VSVs control the angle of the air supplied to the IP compressor to give the best compressor efficiency and maintain stability during acceleration and deceleration.

The angle of the VIGVs and VSVs relative to the airflow changes to adapt to different conditions of compressor operation, which helps to prevent compressor stall/surge conditions.

The VIGVs and VSVs are closed at low speed and open at high speed.

IP Compressor Bleed Valves

Three bleed valves remove excess air from the IP Compressor into the bypass duct when commanded by the EEC via a solenoid.

HP Compressor Bleed Valves

Two bleed valves remove excess air from the HP Compressor into the bypass duct of the Thrust Reverser when commanded by the EEC via a solenoid.

Solenoid Banks

There are three solenoid banks. Two are installed on the right side of the Intermediate Case and one is installed on the left side of the Intermediate Case. There are eleven solenoids in total, five of which operate the five engine handling bleed valves.

IP & HP Bleed Valves

All the bleed valves are two position valves and are either open or closed.

With the engine stationary the bleed valves are open.

At low engine speeds the bleed valves may also be open. The bleed valves are closed at higher engine speeds to provide full airflow through the IP and HP compressors.

The failsafe position of all five-engine handling bleed valves is closed.

© Rolls-Royce plc 2018. Use or disclosure is subject to the legend on the Notice to Holder page

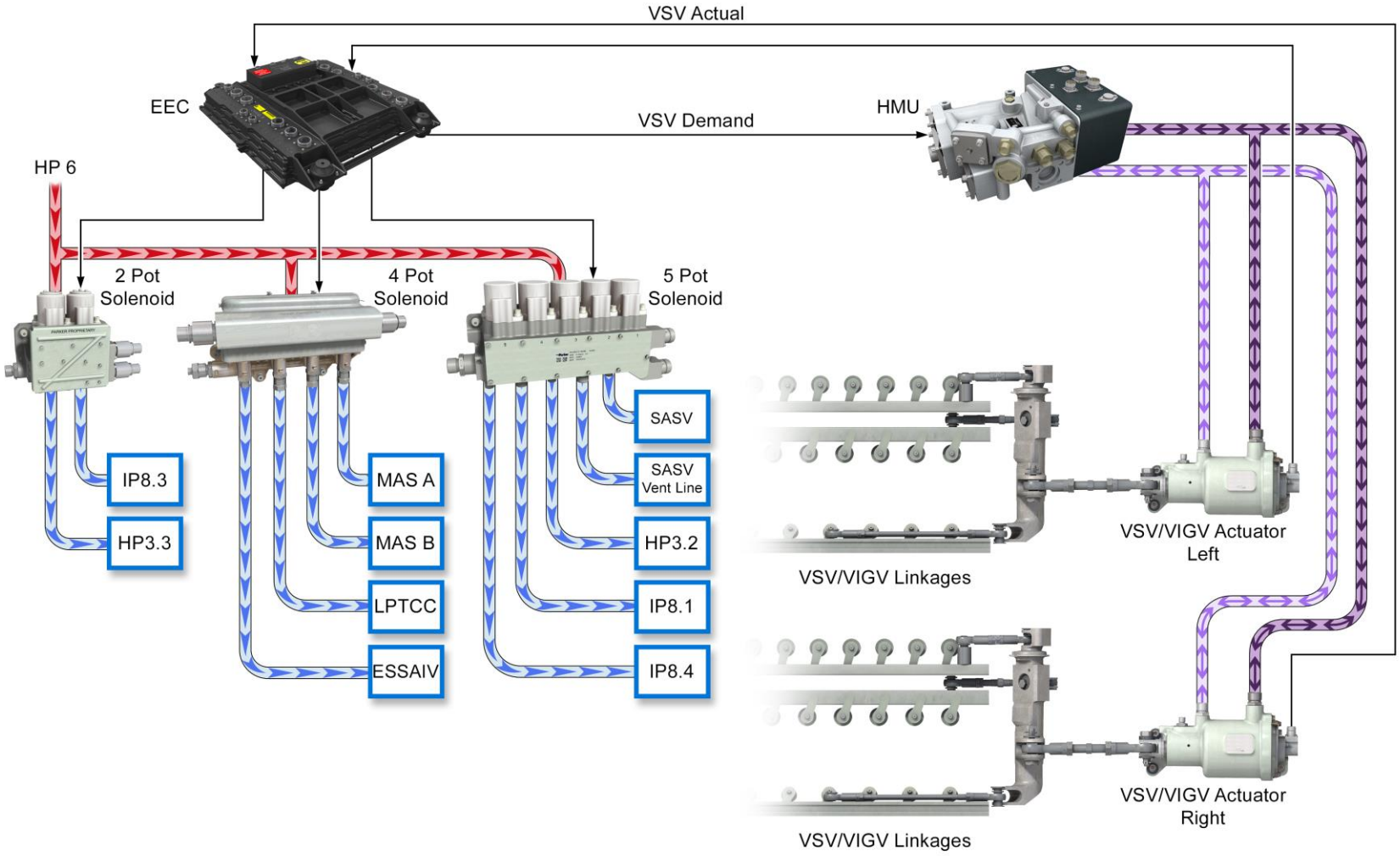

T1000 TEN_LBM_M09_171_02P

AIRFLOW CONTROL SYSTEM

© Rolls-Royce plc 2018. Use or disclosure is subject to the legend on the Notice to Holder page

Variable Inlet Guide Vane (VIGV) / Variable Stator Vane (VSV) Control System

Purpose

To direct the air into the IP compressor at the correct angle to avoid compressor surge whilst maintaining the best engine efficiency.

Location

The single stage of VIGVs is located immediately behind the Engine Section Stators (ESS). The two stages of VSVs are located after the first and second stages of the IP Compressor rotors.

Two actuators are located at the 1 and 7 o'clock positions on the intermediate case.

Description

The VIGV/VSV system consists of the following units:

- Two VIGV / VSV Actuators.
- VIGV / VSV Actuating Mechanism.

The VIGV / VSV system is controlled by the EEC via a dual channel two stage VSV Servovalve inside the HMU. Fuel is used as the hydraulic operating medium and a single channel Linear Variable Differential Transducer (LVDT) inside each actuator supplies actuator ram position to the EEC.

The left actuator LVDT provides a feedback signal to Channel B, and the right actuator LVDT provides a feedback signal to Channel A.

The EEC channel in control only uses the positional feedback from its own LVDT unless that signal is lost, in which case, it will then use the input signal from the other channel.

© Rolls-Royce plc 2018. Use or disclosure is subject to the legend on the Notice to Holder page

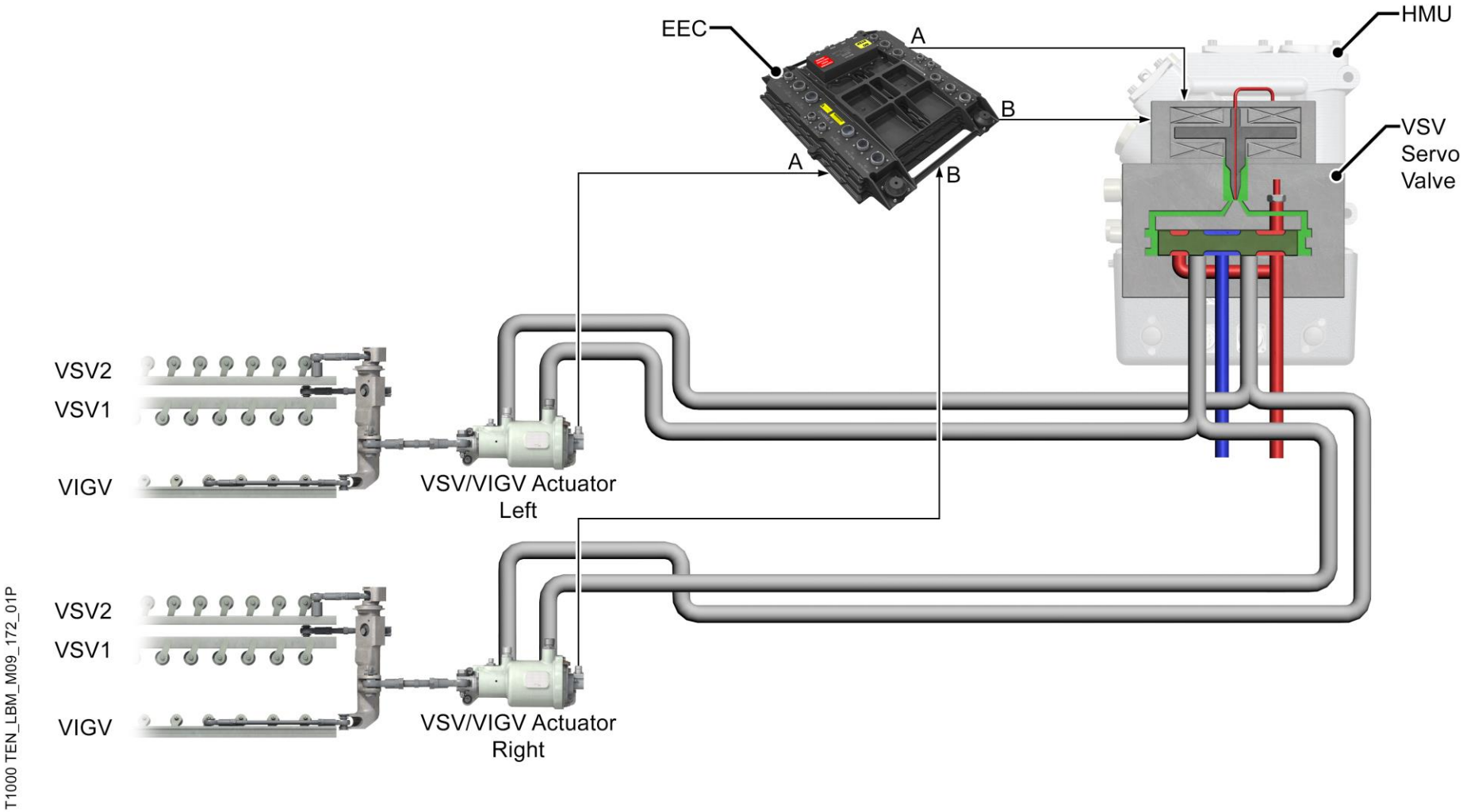

VIGV/VSV CONTROL SYSTEM

© Rolls-Royce plc 2018. Use or disclosure is subject to the legend on the Notice to Holder page

VIGV / VSV Actuators

Purpose

To operate the VIGV / VSV.

Location

The VIGV / VSV Actuators are located at the 1 and 7 o'clock positions beneath the IP Compressor Core Fairings in the Fire Zone 2.

Description

The actuators operate together to share the loads equally. They are connected to a mechanism that converts the linear movement of the actuators into the rotational movement of the VIGVs and VSVs. The VIGVs and VSVs do not move independently, but act in unison to change the angle of attack of the vanes to the airflow as a function of speed (N2) and IP Compressor Inlet Temperature (T24).

As engine speed increases the actuators will retract to open the VIGV / VSVs.

As engine speed decreases the actuators will extend to close the VIGV / VSVs.

During operation of the engine on the ground the VSVs are moved to an "overclosed" position. The overclosed position provides the following benefits:

- An increase in LP Compressor speed at a fuel flow to achieve the minimum N2 at low thrust.
- Reductions in aircraft brake wear.

Loss of Electrical Power to the VSVA Torque Motor

A loss of electrical power to the VSV Torque Motor in the Hydromechanical Unit (HMU) to control the VSVAs will result in the VIGV/VSVs moving to the open high-speed stop position.

Engine Shutdown

At engine shutdown the EEC will move the VSV Actuators to the fully open position

© Rolls-Royce plc 2018. Use or disclosure is subject to the legend on the Notice to Holder page

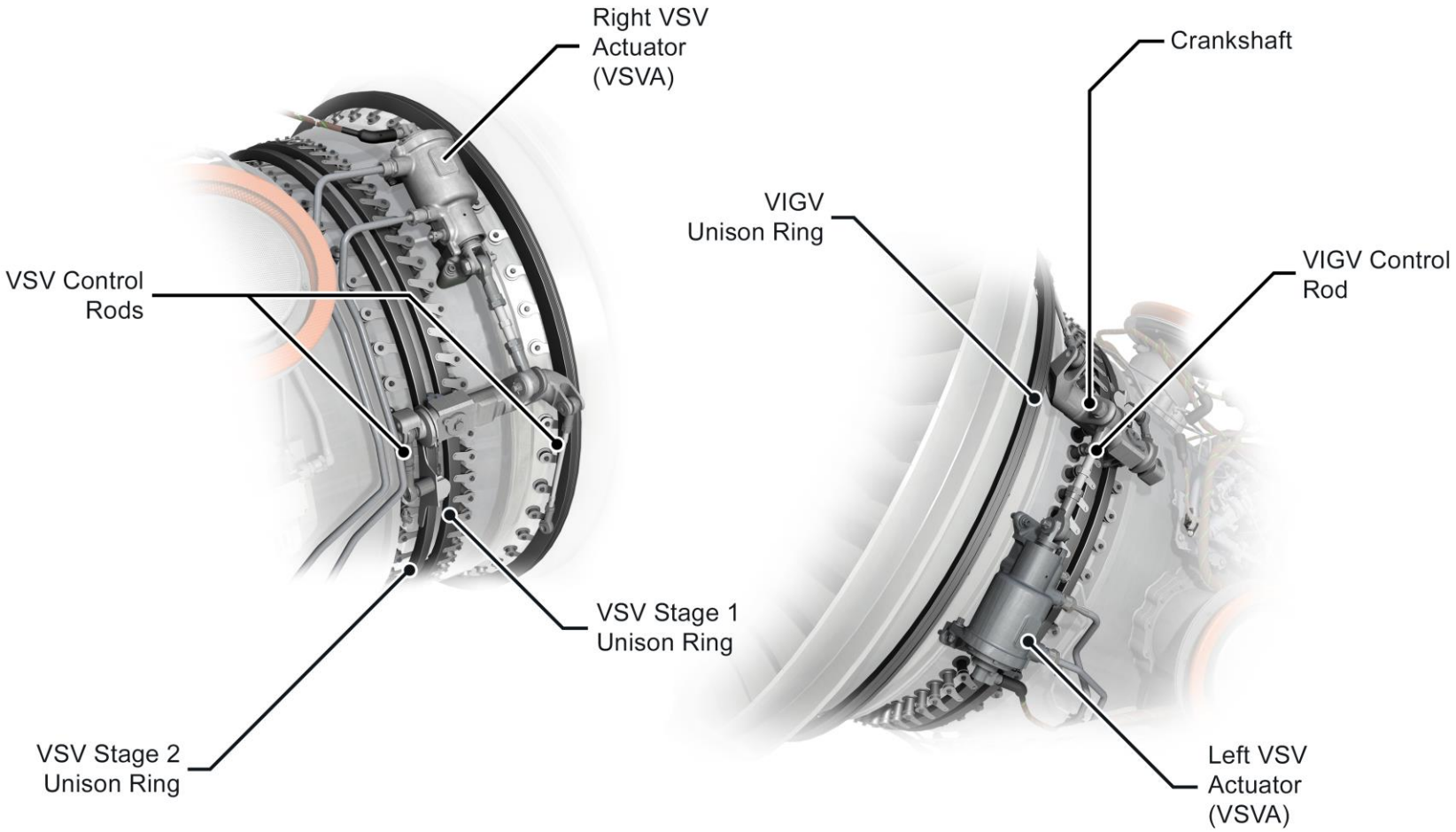

T1000 TEN_LBM_M09_173_02P

VIGV / VSV ACTUATORS

© Rolls-Royce plc 2018. Use or disclosure is subject to the legend on the Notice to Holder page

Engine Handling Bleed Valve System

Purpose

The Engine Handling Bleed Valves control the volume of air flowing through the compressors to prevent stall or engine surge.

Location

The Engine Handling Bleed Valves are located on the Intermediate Case and the Combustion case.

Description

The engine handling bleed valve system consists of the following units:

- The EEC.
- Five solenoids contained within two solenoid banks.
- A total of five bleed valves.

The EEC

The EEC controls the opening and closing of the bleed valves according to one of two schedules held within the software of each channel.

The default bleed valve schedule is based on shaft speed (N2 or N3) and IP Compressor inlet temperature (T24).

The second schedule is based on HP Compressor Pressure Ratio (P30/PS26) for when the Variable Frequency Starter Generator (VFSG) is under high loads.

The EEC selects the schedule which requires the least number of Bleed Valves to be open. Where both schedules demand the same number of Bleed Valves to open then the default (speed) schedule is used.

Solenoid Banks

There are three solenoid banks situated below the Intermediate Compressor Core Fairings on the left and right side of the Intermediate Case comprising eleven solenoids in total. Five of these solenoids operate the five engine handling bleed valves by being energised or de-energised via signals from both channels of the EEC.

Engine Handling Bleed Valves

There are five engine handling bleed valves to control the volume of air flowing through the IP and HP compressors. The IP Compressor has three handling bleed valves and the HP Compressor has two.

The method of operation is the same for both the IP8 and HP3 Engine Handling Bleed Valves. All the bleed valves are operated by HP6 air.

© Rolls-Royce plc 2018. Use or disclosure is subject to the legend on the Notice to Holder page

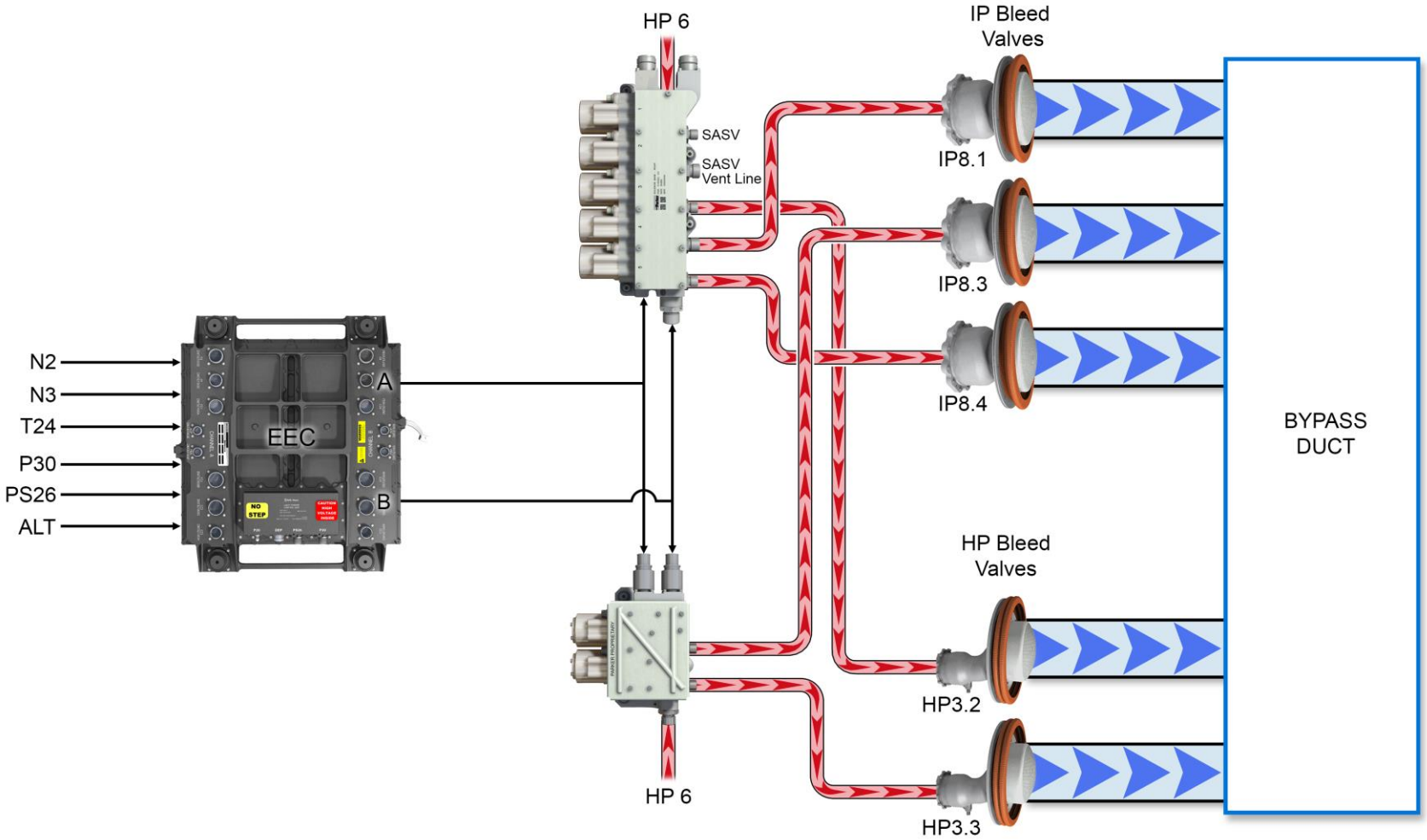

T1000 TEN_LBM_M09_174_02P

ENGINE HANDLING BLEED VALVE SYSTEM

© Rolls-Royce plc 2018. Use or disclosure is subject to the legend on the Notice to Holder page

Bleed Valve Solenoid Banks

Purpose

To control the opening and closing of the three IP8 and two HP3 bleed valves on commands from the EEC.

Location

The three solenoid banks are located on the left and right side of the Intermediate Case beneath the Core Fairings covering the Fire Zone 2.

Description

The three solenoid banks consist of:

- A five port solenoid bank on the right side of the Intermediate Case.
- A four port solenoid bank on the left side of the Intermediate Case.
- A two port solenoid bank on the right side of the Intermediate Case.

Each solenoid bank consists of a number of solenoids joined together as one LRU. Both channels of the EEC are connected to each of the solenoid banks by an electrical connection.

HP6 air is supplied to the solenoid banks by a single pneumatic connection. Different sized pneumatic outlet connections are used to supply HP6 air to the bleed valves and other LRUs.

Each solenoid consists of two coils; one connected to the EEC Channel A, the other to Channel B. and they operate independently on command from the EEC.

Operation of the Engine Handling Bleed Valves is via five solenoids located in the five port and two port Solenoid Banks.

The five port solenoid bank operates the following Engine Handling Bleed Valves:

- The IP8.1 Handling Bleed Valve.
- The IP8.4 Handling Bleed Valve.
- The HP3.2 Handling Bleed Valve.

The two port solenoid bank operates the following Engine Handling Bleed Valves:

- The IP8.3 Handling Bleed Valve.
- The HP 3.3 Handling Bleed Valve.

© Rolls-Royce plc 2018. Use or disclosure is subject to the legend on the Notice to Holder page

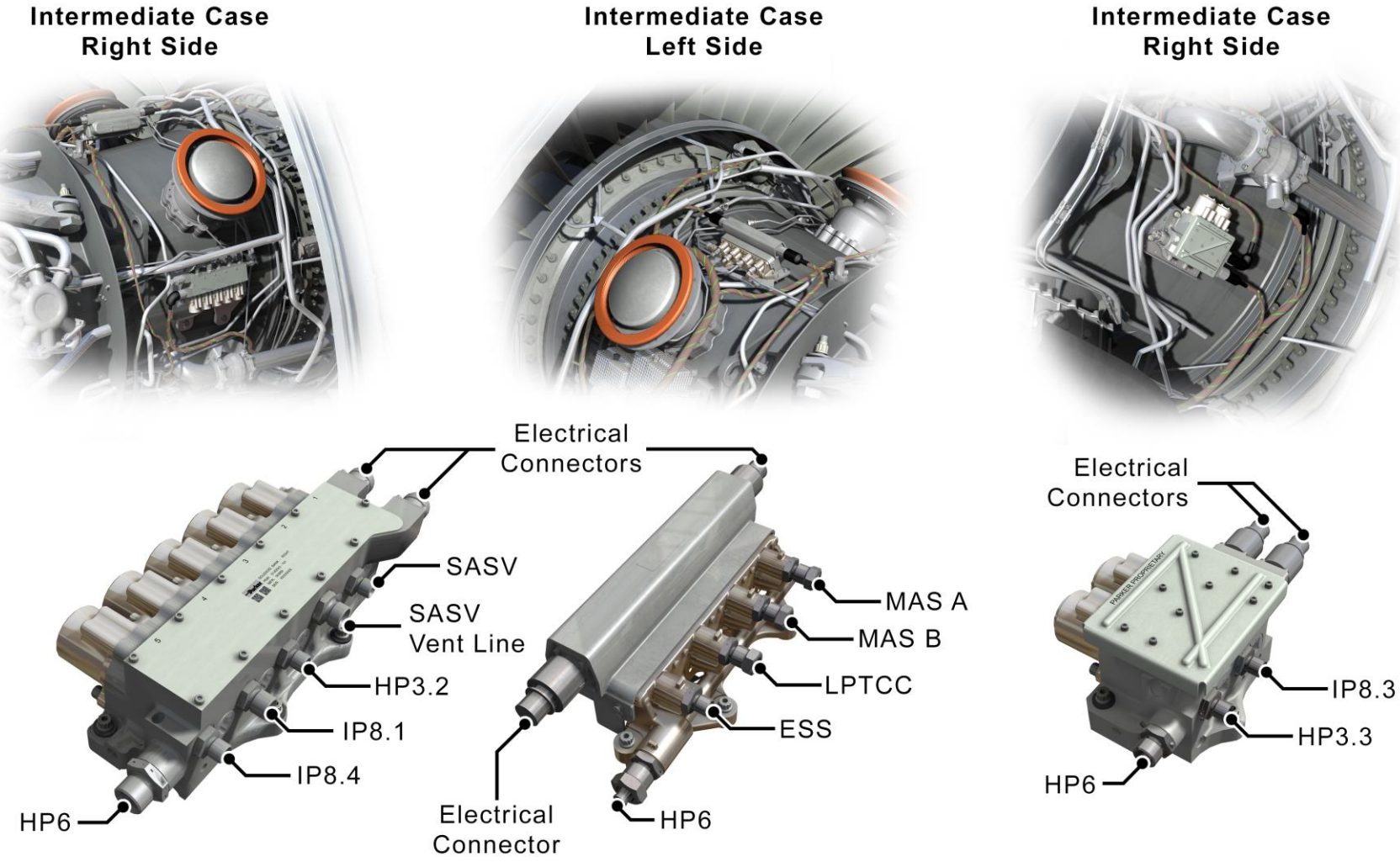

BLEED VALVE SOLENOID BANKS

© Rolls-Royce plc 2018. Use or disclosure is subject to the legend on the Notice to Holder page

IP and HP Engine Handling Bleed Valves

Purpose

To remove excess IP and / or HP compressor air, into the LP Compressor bypass flow and therefore maintain satisfactory engine operability.

Location

The three IP bleed valves are installed on the compressor intermediate case at approximately the 2, 7 and 10 o'clock positions when viewed from the rear.

The two HP bleed valves are installed on the combustion chamber outer case at approximately the 5 and 7 o'clock positions when viewed from the rear.

Description

All the bleed valves consist of a valve and duct assembly with a silencer and seal arrangement located at the end of the duct. With the Thrust Reverser Unit in the closed position the seal touches the opening in the Thrust Reverser Inner Fixed Structure. On the outside of the HP3 Handling Bleed Valves is a shield that is part of the Burst Duct System. This system protects the nacelle should the body of the valve become unserviceable and leak air into the Zone 3 area.

HP6 air is supplied to or vented from the bleed valves via a tube that is connected to the related bleed valve solenoid found in the five port or two port solenoid bank.

The three IP8 and two HP3 bleed valve locations are shown opposite. All positions are referenced from the rear looking forwards.

The IP8 Bleed Valves are numbered and positioned as follows:

- IP8.1 - Top right.
- IP8.3 - Bottom left.
- IP8.4 - Top left.

The HP3 Bleed Valves are numbered and positioned as follows:

- HP3.2 - Bottom right.
- HP3.3 - Bottom left.

The number one position is utilised by the Secondary Air System Valve (SASV).

© Rolls-Royce plc 2018. Use or disclosure is subject to the legend on the Notice to Holder page

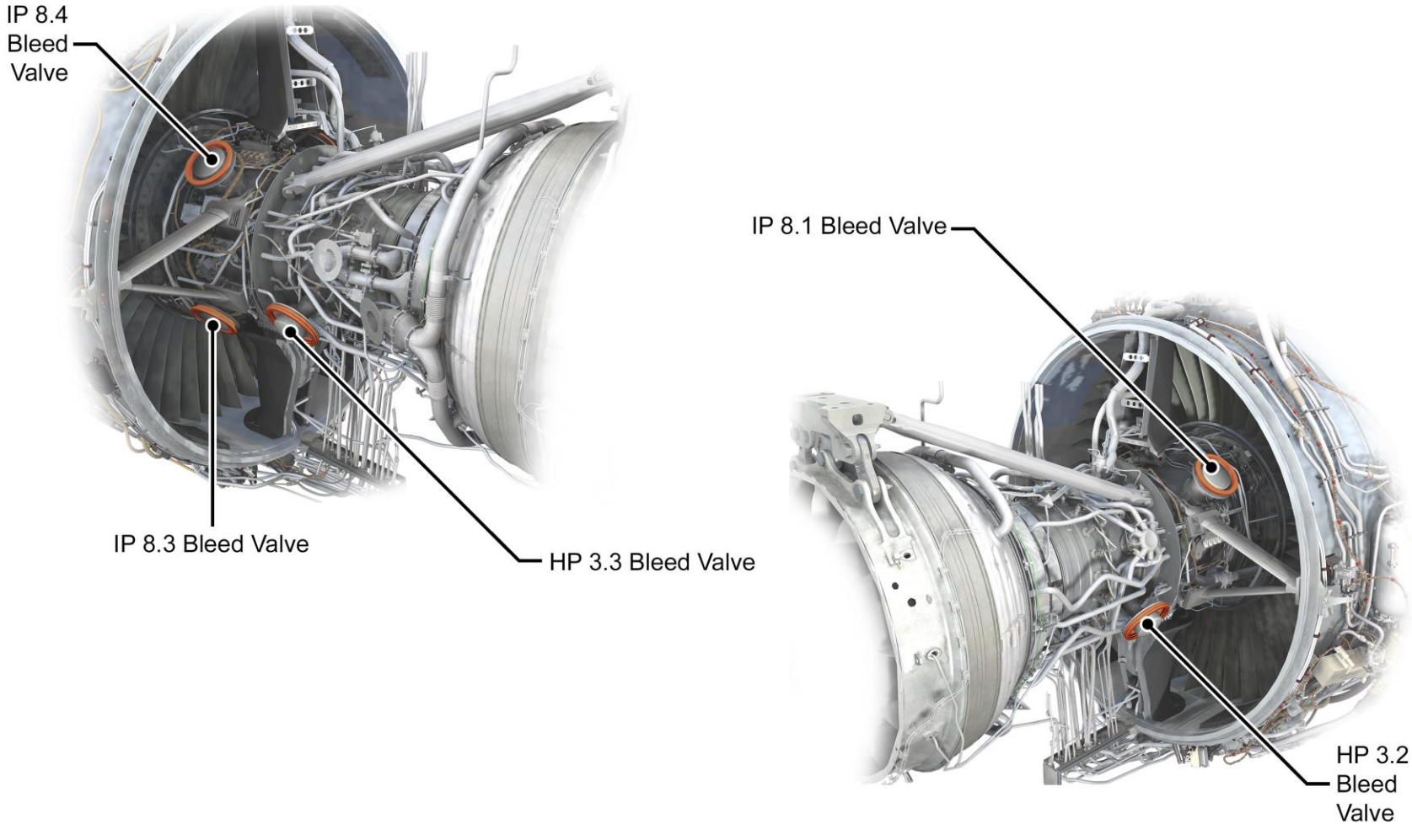

IP AND HP ENGINE HANDLING BLEED VALVES

© Rolls-Royce plc 2018. Use or disclosure is subject to the legend on the Notice to Holder page

Engine Handling Bleed Valve Operation

Bleed Valve Schedules

To understand the operation of the bleed valves an understanding of how the EEC controls the opening and closing of the bleed valves is required.

The EEC contains two engine handling bleed valve schedules within its software. The first is based on shaft speed and the second on HPC Pressure Ratio.

The default schedule for controlling the handling bleed valves is based on shaft speed (N2 or N3) and a calculated T24 (IP Compressor Inlet Temperature).

When conditions of high VFSG loads occur the handling bleed valves will be controlled to a HPC Pressure Ratio Schedule as a function of P30/PS26.

The EEC will compare the two schedules and select the schedule that requires the least number of bleed valves to be open. Where both schedules demand the same number of bleed valves to be open the shaft speed schedule is used.

The EECS controls the Bleed Valves via an ‘open loop’ control method. This means the EECS cannot receive a direct sense of valve position, as the valves do not have a feedback sensor such as an LVDT or microswitch for instance. Instead the EECS monitors the changes in P30 (HP Compressor Exit pressure) that naturally occur during Bleed Valve operation. By using this method the EECS can detect if a Bleed Valve is open or closed when it has been commanded to do so. If the Bleed Valve is found to be in the wrong position the EECS will provide a fault message to the CMCF via the CDN to be annunciated on the EICAS screen as a STATUS message as part of the ENG CONTROL message.

Engine Not Running

When the engine is not running i.e before engine start, the solenoid is de-energised and all the bleed valves are held open by spring pressure.

Engine Running

With the engine running and both channels of the solenoid de-energised HP6 servo pressure will be vented from the Bleed Valve and the valve will ‘blown’ to the closed position by the compressor delivery pressure.

With either channel of the solenoid energised HP6 servo air pressure will be supplied to the Bleed Valve and together with spring pressure the valve will overcome the compressor air and the valve will be held in the open position by the HP6 servo air pressure.

Failsafe Position

In the event of an electrical failure the solenoids are de-powered and air from the engines compressor systems move the bleed valves to the closed position.

The bleed valves will move to the same position if the HP6 servo line is fractured.

By allowing the bleed valves to failsafe to the closed position the risk of damage to the Nacelle is reduced and sufficient cooling air to the turbine will be maintained.

© Rolls-Royce plc 2018. Use or disclosure is subject to the legend on the Notice to Holder page

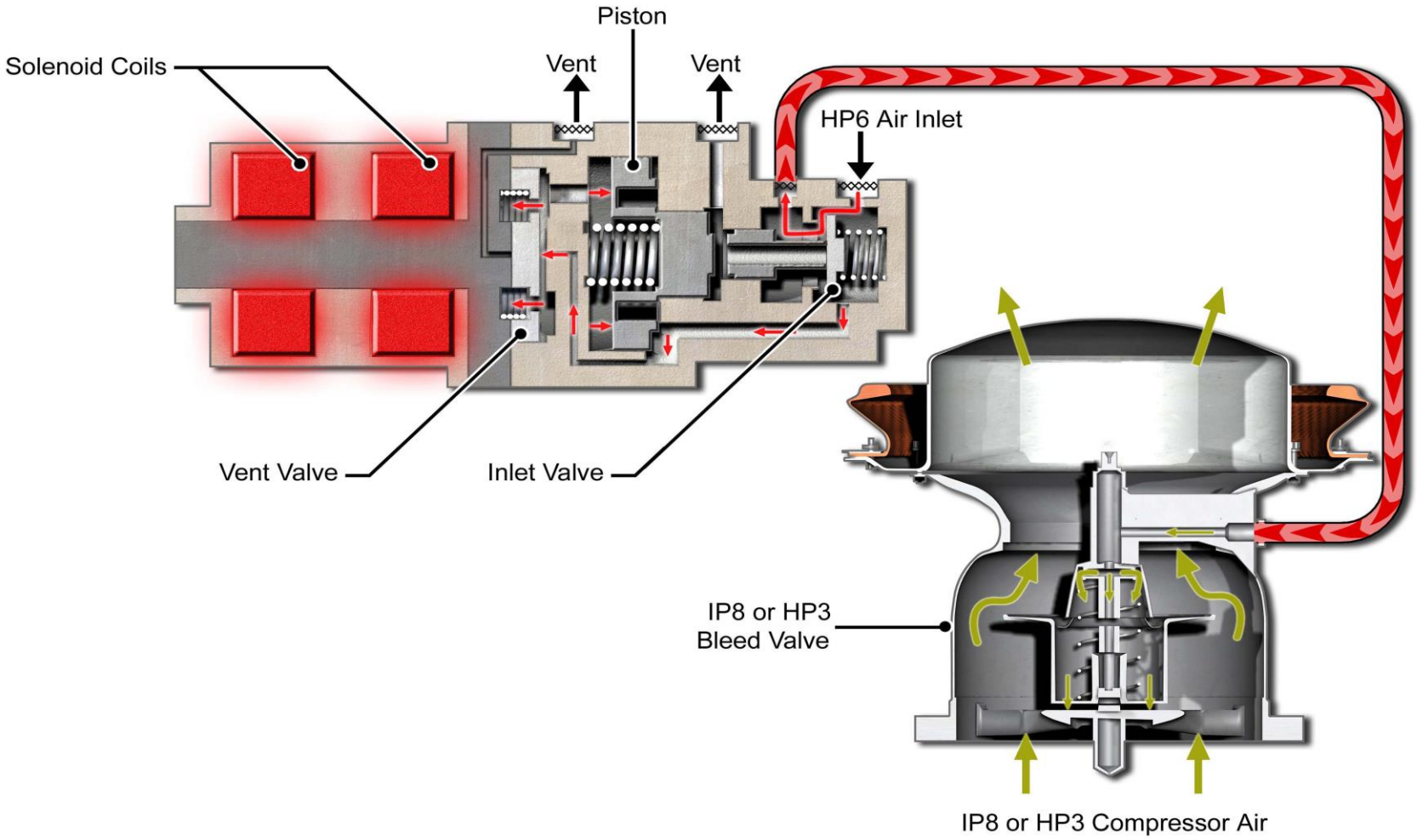

T1000 TEN_LBM_M09_177_01P

ENGINE HANDLING BLEED VALVE - OPERATION

© Rolls-Royce plc 2018. Use or disclosure is subject to the legend on the Notice to Holder page

On Board Maintenance – Ground or Initiated Tests

Introduction

The Initiated tests provide a means by which the maintenance personnel can conduct Engine related tests in a safe and controlled manner. The tests are called up to be carried out as and when directed by the relevant AMM or FIM procedure.

Test Structure

The Central Maintenance Computing Function (CMCF) will generate screens to guide the operator though in the following test steps:

- Test Set-Up (indicate to the operator any necessary warnings, switch selections and instructions required to carry out the test in a safe manner).
- Test In-Progress (Indicates that the test is currently being carried out (operating) – a STOP TEST option is available if required at this point).
- Test Close-Up (switch selections and instructions required to return the system to its original condition).
- Fault Reporting (indicates Passed or Failed condition).

Below is an indication of the Variable Stator Vane Test, AMM Task B787-A-R71-00-00-25B-300B-A and Handling Bleed Valve Test, AMM Task B787-A-R71-00-00-28B-300B-A, together with an explanation of the test capabilities.

Note: See the Troubleshooting section for more details on access and conducting Ground Tests.

© Rolls-Royce plc 2018. Use or disclosure is subject to the legend on the Notice to Holder page

Test Name
EEC SYSTEM TEST CHANNEL A
EEC SYSTEM TEST CHANNEL B
ESS ANTI-ICE SYSTEM
FUEL METERING VALVE SYSTEM CHANNEL A
FUEL METERING VALVE SYSTEM CHANNEL B
FUEL RETURN TO TANK VALVE
HANDLING BLEED VALVE SYSTEMS CHANNEL A
HARNESS CHANNEL A
HARNESS CHANNEL B
IGNITION SYSTEM CHANNEL A
IGNITION SYSTEM CHANNEL B
MODULATED AIR SYSTEM
P20/T20 PROBE HEATER
OIL BYPASS VALVE SYSTEM CHANNEL A
OIL BYPASS VALVE SYSTEM CHANNEL B
OIL DEBRIS MONITORING SYSTEM RESET CHANNEL A
OIL DEBRIS MONITORING SYSTEM RESET CHANNEL B
SECONDARY AIR SYSTEM
TURBINE CASE COOLING ACTUATION SYSTEM
THRUST REVERSER INTERLOCK SOLENOID
VFSG THERMAL BYPASS VALVE
VARIABLE STATOR VANE SYSTEM CHANNEL A
VARIABLE STATOR VANE SYSTEM CHANNEL B
VFSG AOHE AIR CONTROL VALVE SYSTEM CHANNEL A
VFSG AOHE AIR CONTROL VALVE SYSTEM CHANNEL B

The purpose of the Handling Bleed Valve System Test is to verify the operation of the Handling Bleed Valve system for fault confirmation and return to service validation. It is performed, for example, in order to investigate occurrences of engine parameter exceedance (N2, TGT and Turbine Overheat), engine surge and engine stall. The test is performed with the engine operating at idle.

During the Variable Stator Vane System Test the engine will be dry motored and the VSVs are scheduled to different positions to determine if they are operating correctly. Each schedule moves the VSVs to a new position within a given time constraint. A feedback circuit determines whether the VSVs have reached their destination within the given time.

T1000 TEN_LBM_M09_178_01P

© Rolls-Royce plc 2018. Use or disclosure is subject to the legend on the Notice to Holder page

Flight Deck Effects

Introduction

Below is an indication of the associated Flight Deck Effect (FDE) massages with this section (Airflow Control) together with the message type (level), an explanation of its meaning, dispatch restrictions (if any) and expected actions taken by flight or ground crew.

Note: This is for your guidance only. Due to the nature of the aircraft and engine continual development these may change and Rolls Royce cannot guarantee that they are still current and fully accurate. As such, always refer to the appropriate AMM procedure for reference.

© Rolls-Royce plc 2018. Use or disclosure is subject to the legend on the Notice to Holder page

Message	Type	Dispatch	Meaning	Crew Action
ENG CONTROL (L/R)	Status	Do Not Dispatch	The Engine Electronic Engine Control (EEC) is in a “NO Dispatch” configuration. EEC may be operating with a limited set of Engine control parameters and may not be capable of controlling all aspects of the engine	Do Not Operate
ENG EEC C1 (L/R)	Status	Short Term Dispatch Restrictions	Engine control is in a time limited dispatch condition and the control system is operating with reduced redundancy.	Repair within time scales

T1000 TEN_LBM_M09_179_01P

© Rolls-Royce plc 2018. Use or disclosure is subject to the legend on the Notice to Holder page

Airflow Control System Reference Wiring Diagrams

Introduction

Below is a wiring schematic of the associated units connected to the Airflow Control System. This is only a representation of the actual connectors but all plugs and connectors are indicated with the reference identifiers. This should be used for reference only and not be used as a definitive document. For a more detailed explanation (pins and sockets for troubleshooting purposes etc) and for further details, then always refer to the actual wiring diagrams as given within the AMM or FIM electronic documentation.

© Rolls-Royce plc 2018. Use or disclosure is subject to the legend on the Notice to Holder page

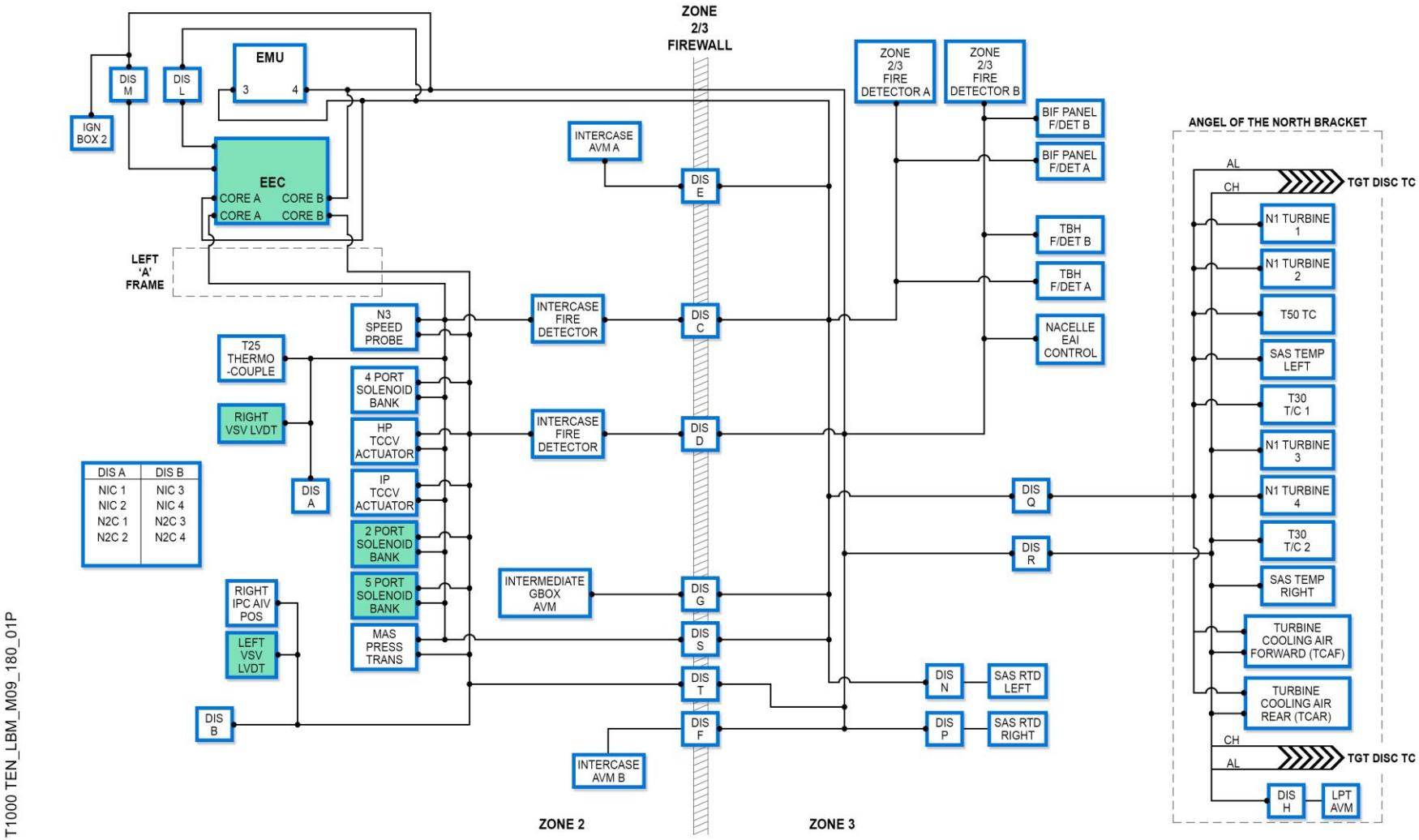

AIRFLOW CONTROL WIRING SCHEMATIC

© Rolls-Royce plc 2018. Use or disclosure is subject to the legend on the Notice to Holder page

Airflow Control System Reference Wiring Diagrams

Introduction

Below is a wiring schematic of the associated units connected to the Airflow Control System. This is only a representation of the actual connectors but all plugs and connectors are indicated with the reference identifiers. This should be used for reference only and not be used as a definitive document. For a more detailed explanation (pins and sockets for troubleshooting purposes etc) and for further details, then always refer to the actual wiring diagrams as given within the AMM or FIM electronic documentation.

© Rolls-Royce plc 2018. Use or disclosure is subject to the legend on the Notice to Holder page

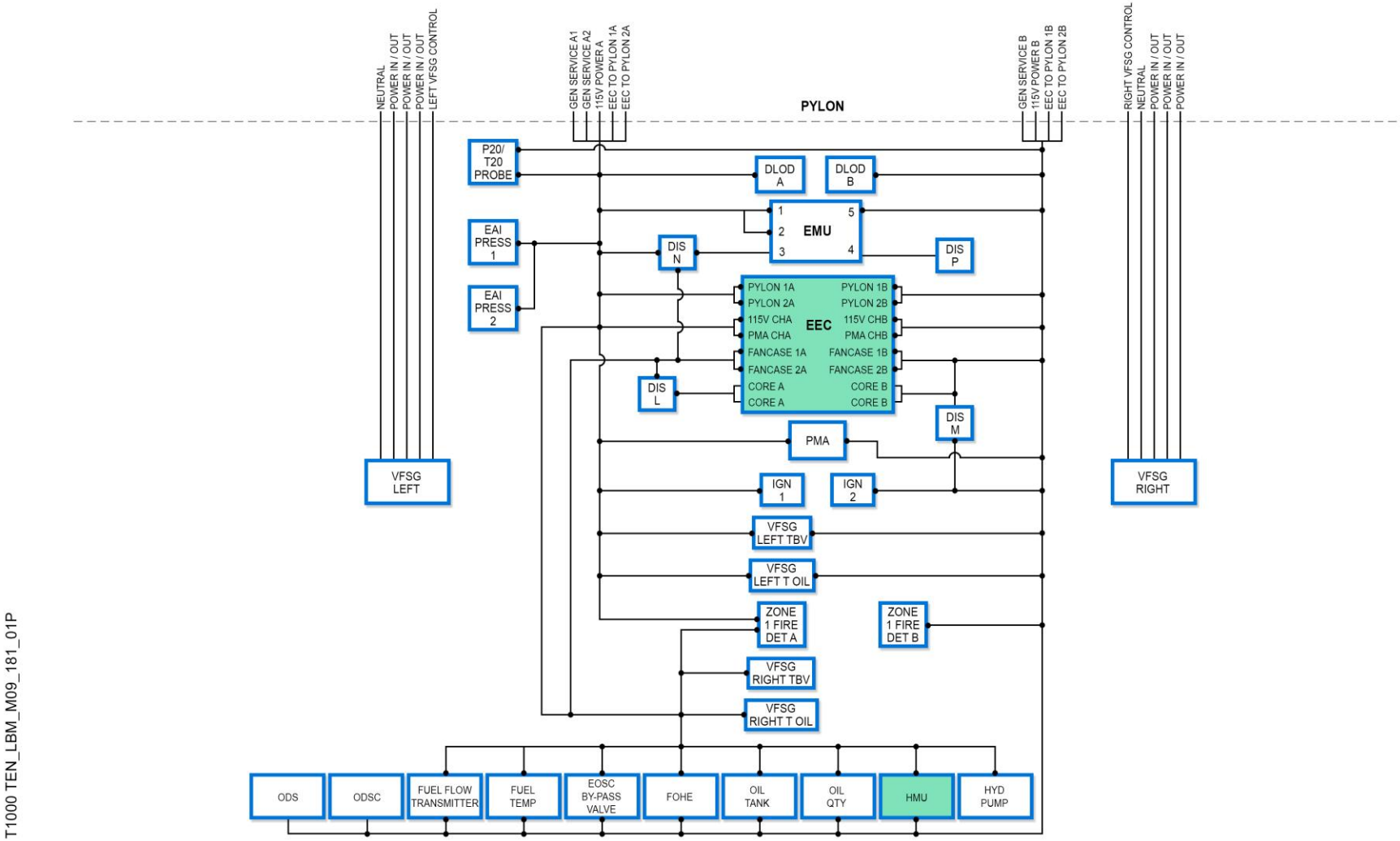

AIRFLOW CONTROL WIRING SCHEMATIC

© Rolls-Royce plc 2018. Use or disclosure is subject to the legend on the Notice to Holder page

END OF SECTION

Section 10 – Secondary Air Systems

ATA Chapter Covered:

75

© Rolls-Royce plc 2018. Use or disclosure is subject to the legend on the Notice to Holder page

Secondary Air System: Cooling & Sealing

Description

The secondary air system provides air; to cool the engine internally; to seal and pressurise the main bearing chambers and turbine rims and to control the axial bearing loads. The secondary air system takes air from;

- IP Compressor Stage 8 - IP8.
- HP Compressor Stage 3 - HP3.
- HP Compressor Stage 6 - HP6.

Cooling

The discs and shafts of the engine are cooled using air from a source that will not cause thermal shock to components. The hottest parts of the engine use HP6 cooling air and the cooler parts use HP3 and/or IP8 air as appropriate.

Sealing & Pressurising

Each turbine disc rim is provided with sealing air that helps to stop hot annulus gas flowing into the internal disc and shaft cavities.

The outside of each bearing chamber is also sealed and pressurised with air to prevent the escape of oil into the engine's internal disc and shaft cavities.

Bearing Loads

Labyrinth seals are used to control the flow of air from areas of the engine that are at different pressures. Controlling the pressure drop across labyrinth seal sets the axial loads felt by the main bearings.

Secondary air is used at the following locations:

IP Stage 8 Air (Yellow in the diagram)

- Pressurise and seal the FBH and cool the IP compressor drums.
- Pressurise and seal the IGB, HPT/IPT bearing chamber and the TBH
- Pressurise and seal the Intermediate Gearbox, EGB, the rear face of the IPT disc and the LPT disc rims.
- Cool the IP & HP compressor drums, the inner walls of the HPC shaft, the bore of the HPT disc, the rear face of the IPT disc and the LPT discs.
- Cool the IP NGV's

HP Stage 3 Air (Purple in the diagram)

- Pressurise and seal the FBH and cool the IP compressor drums.
- Pressurise and seal the front rim of the IPT disc and the rear rim of the HPT disc.
- Cool the rear face of the HPT disc and front face of the IPT disc.
- Cool the IPT blades and IP NGVs.

HP Stage 6 Air (Red in the diagram)

- Cool the HPT Blades and HP NGVs.
- Cool the outer wall of the HPC shaft, the front face of the HPT disc.
- Cool the combustor.

Switched HP3 Air Supply

At low power conditions HP3 air is used to supplement IP8 air pressure to seal the bearing chambers. Using HP3 air in this way also prevents reingestion and reverse flow of turbine exhaust gases entering the cooling and sealing system.

© Rolls-Royce plc 2018. Use or disclosure is subject to the legend on the Notice to Holder page

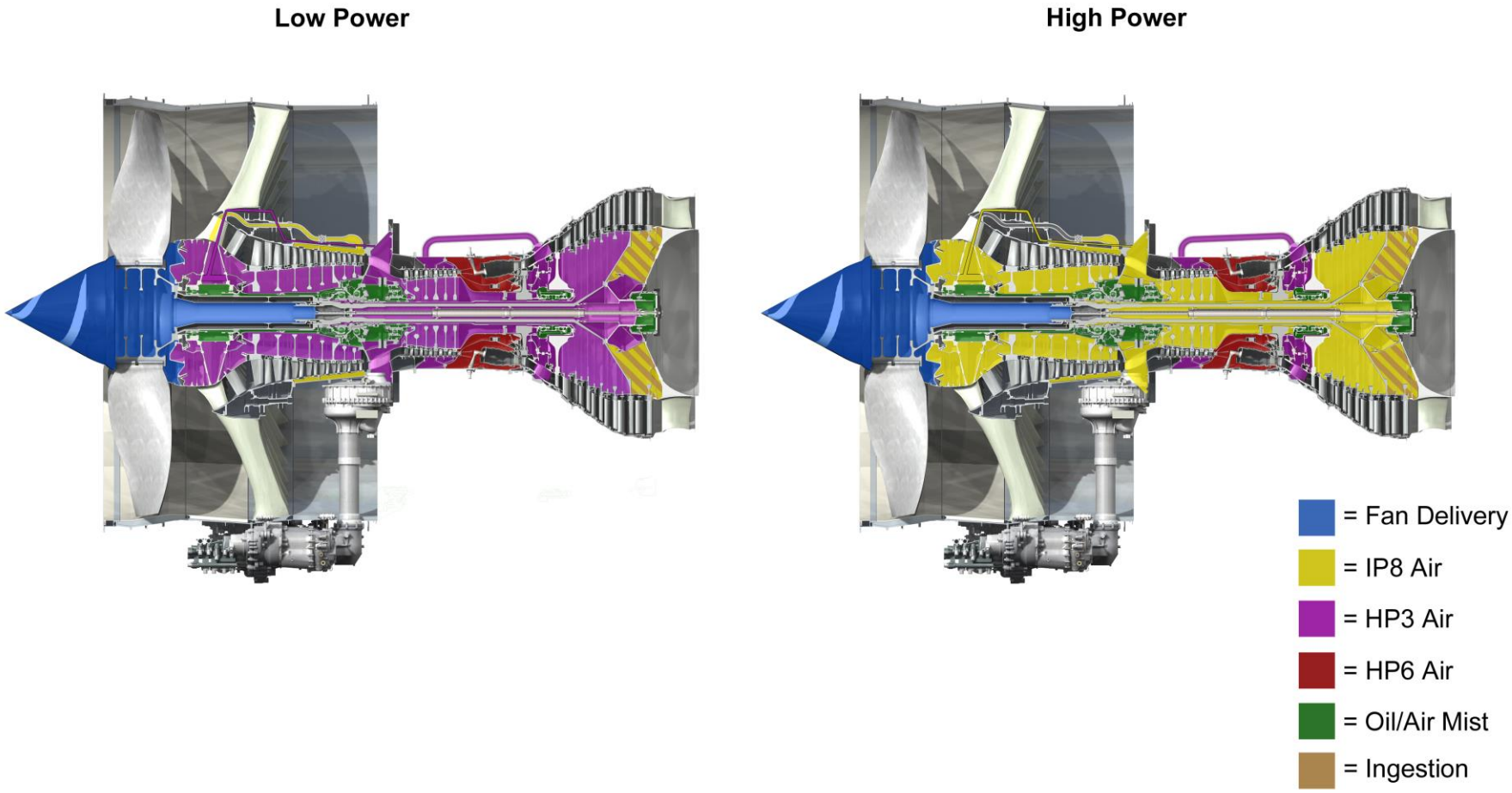

T1000 TEN_LBM_M10_182_01P

SECONDARY AIR SYSTEM COOLING AND SEALING

© Rolls-Royce plc 2018. Use or disclosure is subject to the legend on the Notice to Holder page

Secondary Air System Valve (SASV)

Location

The Secondary Air System Valve (SASV) is located on the HP System Outer Case at approximately the 2 o'clock position.

Purpose

The purpose of the SASV is to supplement IP8 cooling and sealing air with HP3 during low power conditions to prevent loss of oil from the bearing chambers, ingestion of gas from the gas path and reverse flow.

Description

The cavity under the IP and LP turbines is normally fed with IP8 air to prevent ingestion of annulus gas from the gas path. At low power conditions IP8 pressure is too low to seal the bearing chambers and ensure that ingestion of annulus gas does not occur. Therefore IP8 air is supplemented by HP3 air, under the control of the Secondary Air System Valve (SASV).

Secondary Air System Valve (SASV)

The SASV is located on the upper right of the combustion case. The function of the SASV is similar to an HP3 Handling Bleed Valve, except the HP3 air is fed from the SASV into six IP8 transfer tubes to supplement the IP8 cooling and sealing air instead of being exhausted into the bypass duct. The SASV has two states, either OPEN or CLOSED.

When the SASV is OPEN HP3 air supplements IP8 air. When the SASV is CLOSED HP3 air is not available and only IP8 air is used.

Secondary Air System Solenoids

Two solenoid valves, arranged in series and located in the four port solenoid bank are used to operate the SASV.

One solenoid is wired to the EECs Channel A & B Control Computers, and the other solenoid is wired to the EECs Channel A & B Protection Computers. Two solenoids are employed to ensure that no single failure in the solenoids or EEC can lead to the SASV being open when commanded closed.

SAS Thermocouples & RTDs

To detect the SASV position, a total of four sensors are used to measure the temperature in the IP8 transfer tubes. Two of the sensors are thermocouples and two are Resistance Temperature Devices. The EEC Channel A & B Protection Computers receives temperature signals from the 4 sensors, which are then compared to threshold value against a T30 (HPC) temperature. Since HP3 is always hotter than IP8, at a given value of engine T30, the EEC can determine the status of the SASV.

If the EEC detects the SASV temperature (TSAS) is above its threshold the EEC will de-energise the solenoids for the remainder of the flight.

© Rolls-Royce plc 2018. Use or disclosure is subject to the legend on the Notice to Holder page

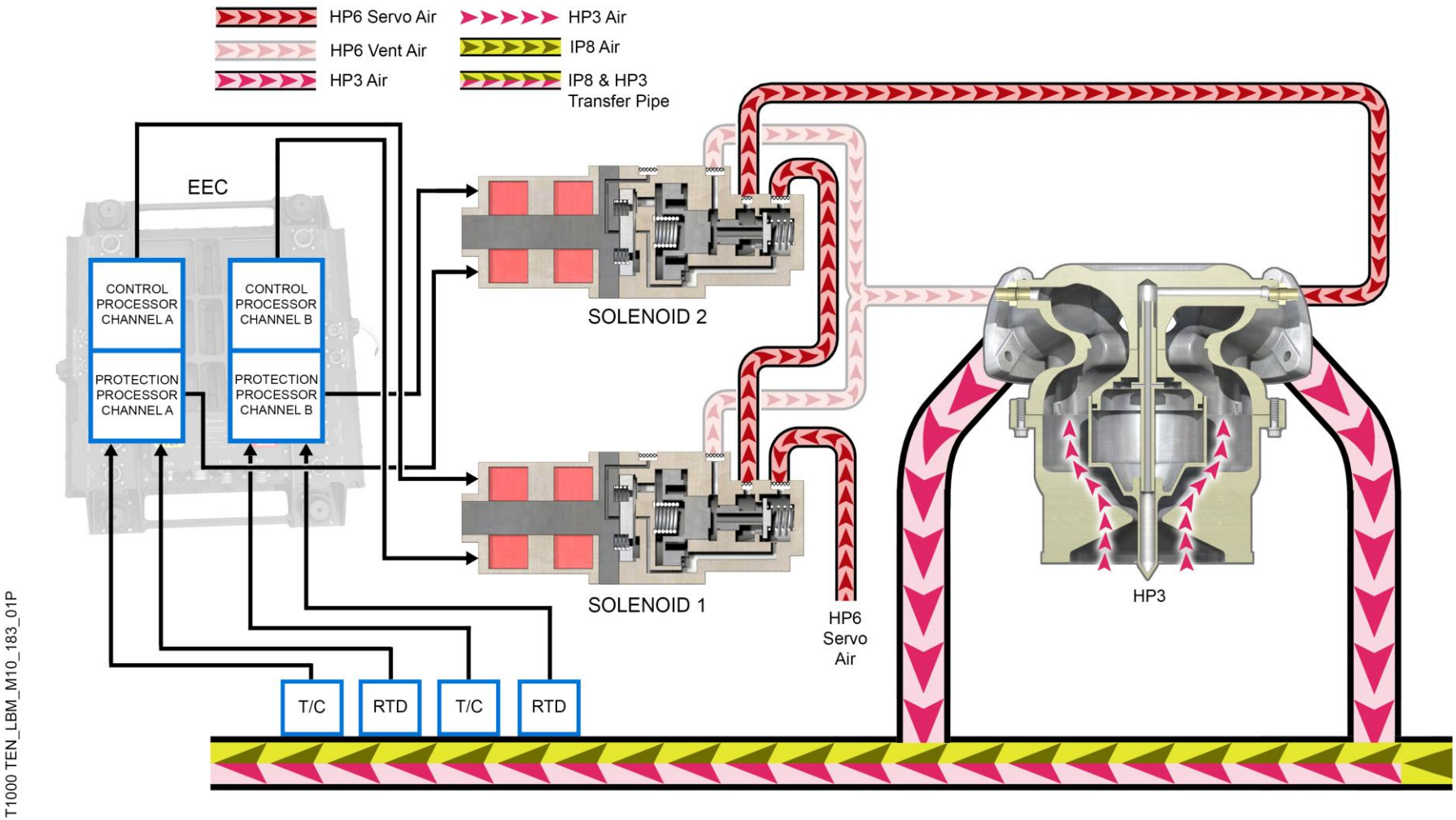

SECONDARY AIR SYSTEM VALVE – OPEN – LOW POWER

© Rolls-Royce plc 2018. Use or disclosure is subject to the legend on the Notice to Holder page

Secondary Air System Valve – Operation

The operation of the SASV is similar to that of the HP3 Engine Handling Bleed Valves except instead of bleeding the HP3 air into the bypass duct of the Thrust Reverser a manifold directs the HP3 air into the six (6) IP8 transfer tubes.

Engine Not Running

When the engine is not running, the two SASV solenoids are de-energised and the SASV piston is held OPEN by spring pressure alone.

In this position neither IP8 nor HP3 air is used for cooling and sealing.

Engine Running

With the engine running the two SAS solenoids can be in one of two states, either energised or de-energised.

Solenoids Energised

During engine starts, and also at **low power** conditions (Ground Idle), the EEC energises both SASV solenoids. This allows HP6 servo pressure to be supplied to the valve and together with spring pressure will overcome HP3 air and move the SASV to the OPEN position.

In this position HP3 supplements IP8 for cooling and sealing.

Solenoids De-Energised

When the engine speed is between Ground and Flight Idle the solenoids are de-energised and HP6 servo air is vented. This action allows HP3 air from the engine compressor to enter the valve inlet and move the SASV piston to the CLOSED position against the spring force, i.e. “blows” the valve closed. This is also the failsafe position.

In this position IP8 Compressor Air is used for cooling and sealing.

Effect On The Engine Operation Due To The SASV Not Operating Correctly.

SASV closed when it should be open.

Possible reasons:

1. Solenoids failing to vent HP6 servo air.
2. Fracturing of HP6 servo air tube.
3. EECS de-energising the solenoids when commanding them energised i.e. electrical failure to the solenoids.

Effect:

- EECS raise Idle Speed.
- VSV’s and Handling Bleed Valves re-scheduled to accommodate higher idle speed.
- EICAS message(s) inform crew of higher than normal idle speed and risk of thrust asymmetry during acceleration.

SASV open when it should be closed.

Possible reasons:

1. Debris in the valve.
2. Valve sticking in the open position.
3. Disintegration of the valve.

Effect:

- System temperature rises rapidly in less than 1 second.
- EECS reduces engine power until HP3 is at a safe level.
- EICAS message(s) prompt flight crew to retard the Engine Throttles until message(s) disappear.
- EECS closes SASV for remainder of flight.
- Aircraft not dispatchable until maintenance action has taken place on the SASV.

© Rolls-Royce plc 2018. Use or disclosure is subject to the legend on the Notice to Holder page

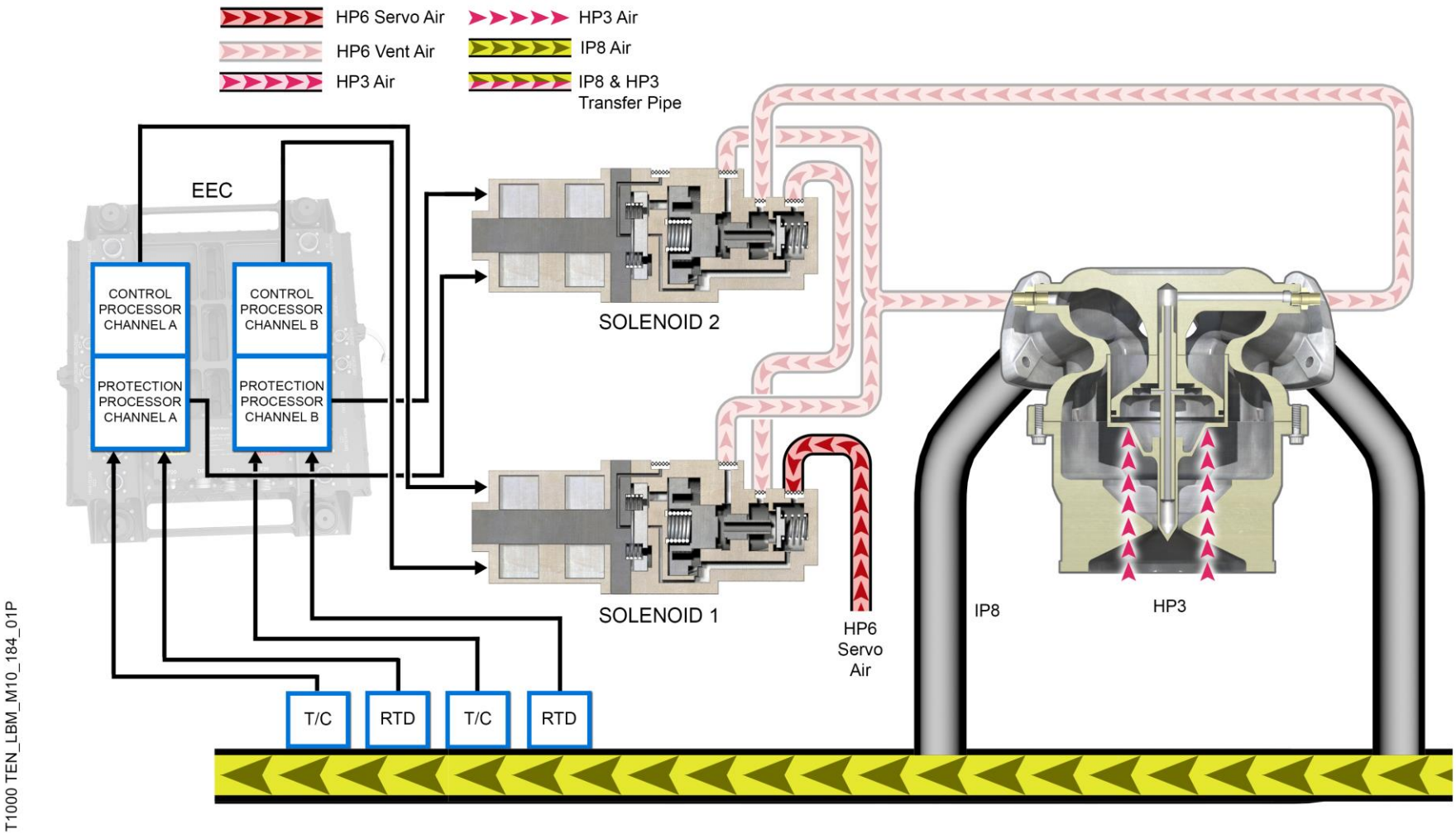

SECONDARY AIR SYSTEM VALVE – CLOSED – HIGH POWER

© Rolls-Royce plc 2018. Use or disclosure is subject to the legend on the Notice to Holder page

Modulated Air System (MAS)

Location

The Modulated Air System is located on the core within zone 2 and 3 and inside the HP/IP Structure.

Purpose

The purpose of the MAS is to provide fuel burn benefits at cruise conditions.

Description

The components that make up the MAS are as follows:

- The EEC
- Two, dual channel, pneumatic solenoids.
- Two MAS Air Control Valves (MASACV) A and B
- One Pressure Transducer (PMAS)
- 14 Vortex Amplifiers (VxAs), 11 internal and 3 external.
- A Turbine Cooling Air Forward (TCAF) thermocouple.

EEC

Each Control Processor within the Channel is connected to each channel of a solenoid and operates MAS Valve A (MASACVA).

Each Safety Processor within the Channel is connected to each channel of a solenoid and operates MAS Valve B (MASACVB).

The solenoids are connected to the EEC in this way to prevent spurious failures.

The EEC controls the solenoids as a function of; TRA, Altitude, N1, TCAF and whether the aircraft is in flight or on ground.

When conditions for activating modulation are satisfied the EEC modulates the MAS Valves to a schedule held in its software. A BITE check is carried out at the start of the cycle to detect any failures.

Solenoids

Each MASACV is controlled by its own solenoid which relies on the EEC to energise or de-energise them. In this way HP6 air is either supplied to open the MASACVs or vented to close them. The solenoids are connected in series within the 4 port solenoid pack which is found on the left side of the Intermediate Case beneath the Compressor Fairings (Zone 2).

Modulated Air System Air Control Valves (MASACV)

The two MASACVs are located on the left side of the Intermediate Case beneath the Compressor Fairings (Zone 2). The valves are pneumatically operated using HP6 air supplied from or vented through the two solenoids mentioned above. The MASACVs supply HP6 air to the control port of each external Vortex Amplifiers. A pressure sensor (PMAS) provides feedback to the EEC of MASACV operation.

Vortex Amplifiers (VxAs)

14 vortex amplifiers are located on the engine, 11 of which are internal, located in the HP/IP structure, and three are external located in three of the six HP3 cooling pipes.

HP6 air is supplied to each control port of the external VxAs from the MAS Valves. Introduction of this air induces a vortex into the HP3 cooling air to decrease the flow rate of the HP3 air and therefore the cooling effect of the air.

Turbine Cooling Air Forward Thermocouple (TCAF)

TCAF is used by the EEC to monitor the air around the turbine discs as part of the MAS modulating logic.

© Rolls-Royce plc 2018. Use or disclosure is subject to the legend on the Notice to Holder page

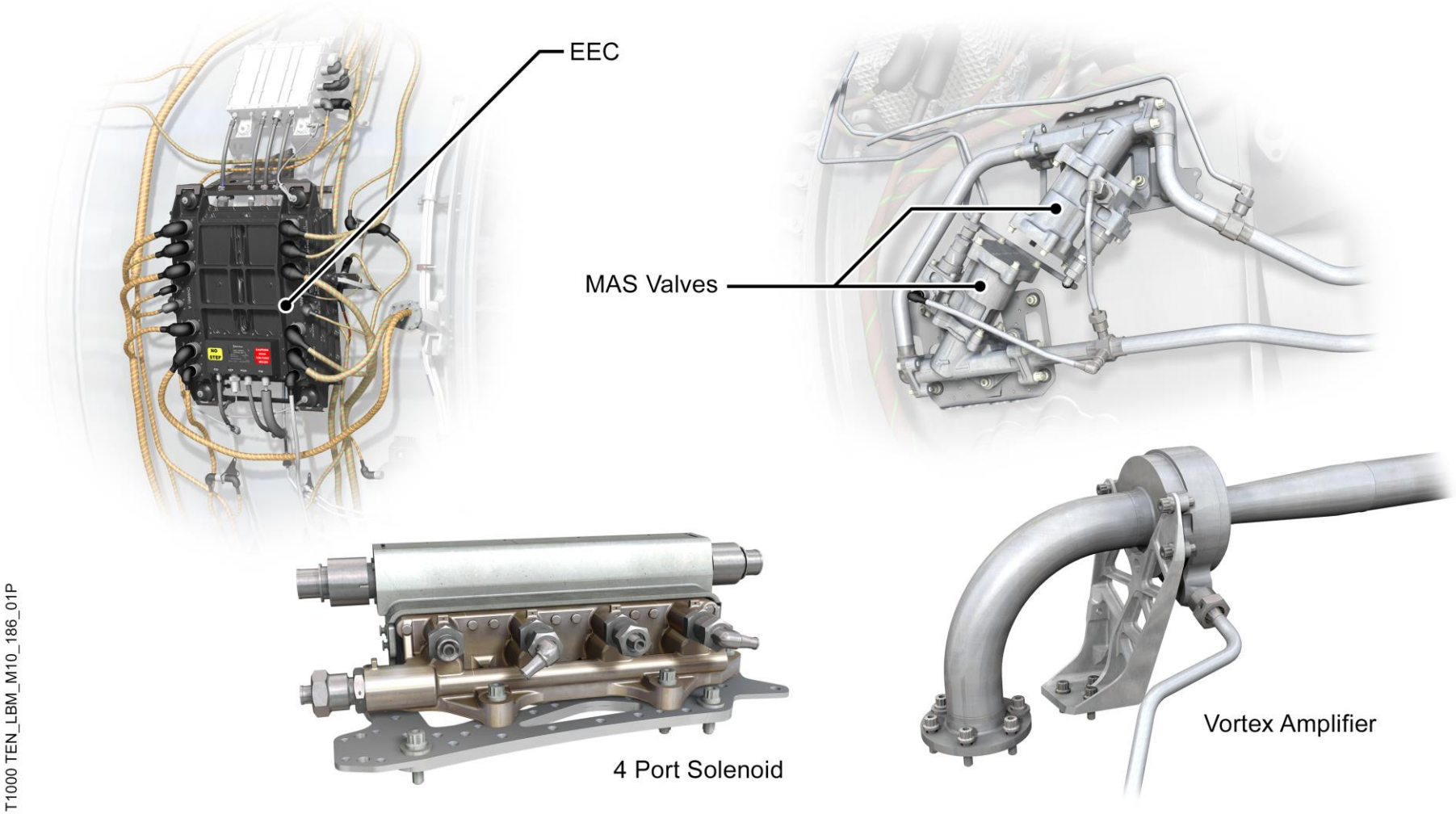

MODULATED AIR SYSTEM (MAS) COMPONENTS

© Rolls-Royce plc 2018. Use or disclosure is subject to the legend on the Notice to Holder page

Modulated Air System (MAS) - Operation

Operation of the Modulated Air System is carried out by the EEC and is only active during cruise when the engine is at a relatively low power setting and excess cooling is not required. i.e. reduce HP3 Cooling air flow

The MAS function has two separate sub-systems:

1. HP3 rim flow modulation which is achieved internally using a ring of 11 Vortex Amplifier's (VxAs) in the HP/IP Structure.
2. Control and modulation of HP3 air using three external Vortex Amplifiers fitted to three of the six HP3 cooling pipes.

This section describes item 2 only.

When the EEC detects the conditions for HP3 modulation are satisfied the sequence begins with a BITE check of the MAS solenoids (X and Y).

MAS Air Control Valve (MASACV) Operation

Once the BITE check is complete the channel in control of the EEC energises both solenoids (X and Y) to allow closure of the vent line in the solenoids and allow HP6 air to flow through the solenoids to the MASACVs.

The MAS Valves are connected in series and are also supplied with HP6 air. The air supply from the solenoids (HP6 servo) allows the valve mechanism to change position such that the HP6 air supply (to the valve assembly) can pass through the valves and to the VxAs.

Closure of the MAS Valve requires the solenoids to be de-energised allowing the HP6 air to the MAS Valves to be vented. This action returns the valve mechanism to the closed position by use of a spring.

Pressure Transducer

A pressure Transducer located between the MASACVs and the VxAs provides the EEC with a confirmation signal that the MAS Valves are in the correctly commanded position, open or closed. A fault message will be sent to the EEC if the valves are not in the correctly commanded position.

Vortex Amplifier

Cooling of the Turbine Discs is accomplished by externally transferring HP3 air from the HP Compressor to the Turbine via six tubes of which three have Vortex Amplifiers. When used on the Trent 1000-TEN the Vortex Amplifiers reduces the flow of excess HP3 cooling air at cruise thus reducing fuel consumption.

Manual Lockout of the MAS System

As part of the maintenance and troubleshooting activities the MAS valves have the capability to be manually locked out. This operation blanks off the HP6 air supply to the MASACVs to prevent the external Vortex Amplifiers from operating and will incorporate a small fuel burn penalty.

© Rolls-Royce plc 2018. Use or disclosure is subject to the legend on the Notice to Holder page

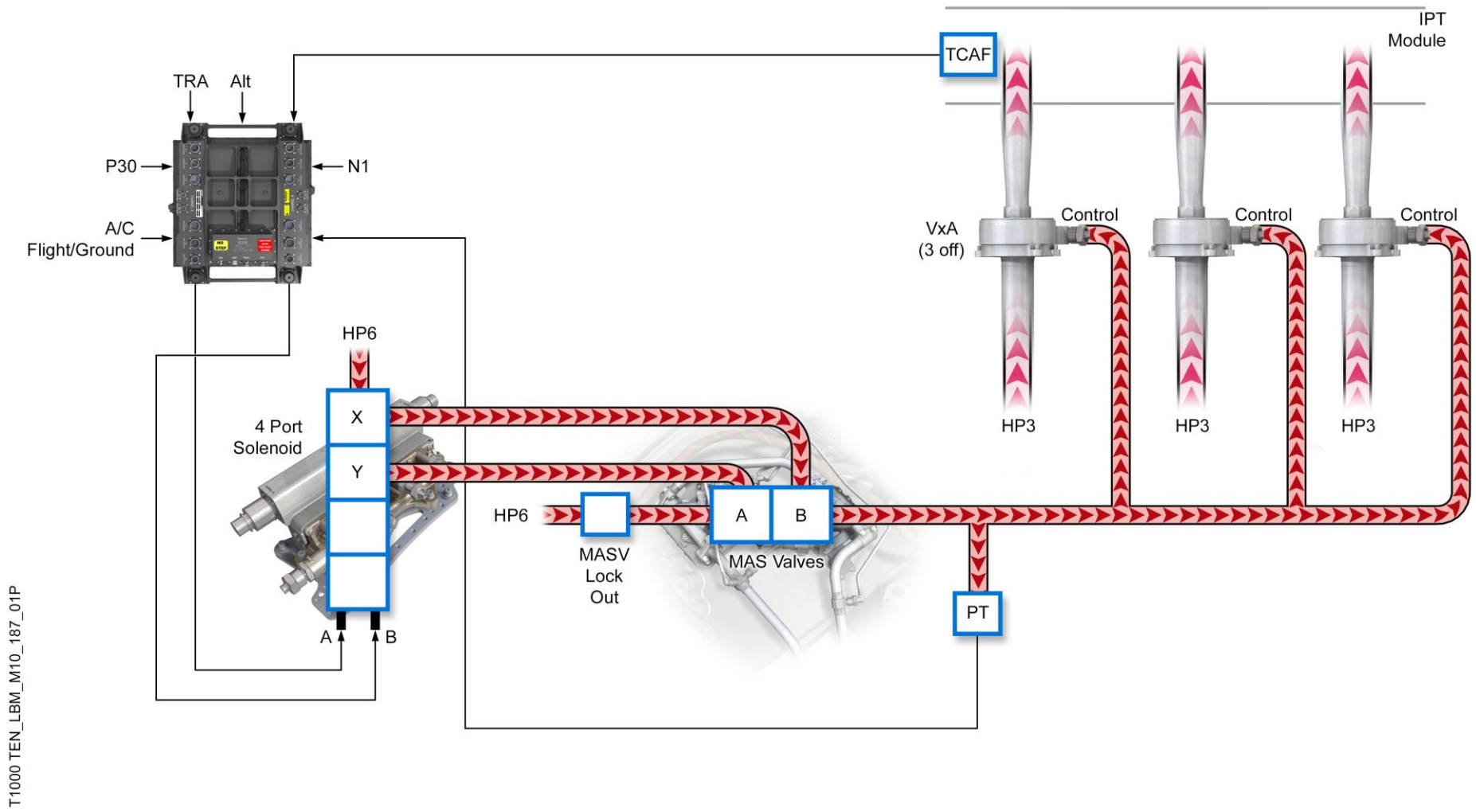

MODULATED AIR SYSTEM (MAS)

© Rolls-Royce plc 2018. Use or disclosure is subject to the legend on the Notice to Holder page

Vortex Amplifiers (VxA)

Location

Three Vortex Amplifiers are located in three of the six HP3 transfer tubes.

Purpose

The purpose of the Vortex Amplifiers is to reduce the flow of HP3 cooling air to the rear of the HP Turbine and the front of the IP Turbine.

Description

A Vortex Amplifier is a fluidic device which when used on the Trent 1000-TEN reduces the flow of HP3 cooling air at cruise thus reducing fuel consumption.

Each Vortex Amplifier has a Supply Port, Control Port and an Outlet Port. In a non-modulating condition HP3 air flows from the Supply Port directly to the Outlet Port to the Turbine disc area.

In a modulating condition the MASACVs allow HP6 air to be directed to the Control Port. This action forms a vortex around the circumference of the amplifier body. In doing so the HP3 cooling air flow to the turbine is reduced whilst still cooling the turbine discs at the correct rate for the condition; i.e. cruise.

© Rolls-Royce plc 2018. Use or disclosure is subject to the legend on the Notice to Holder page

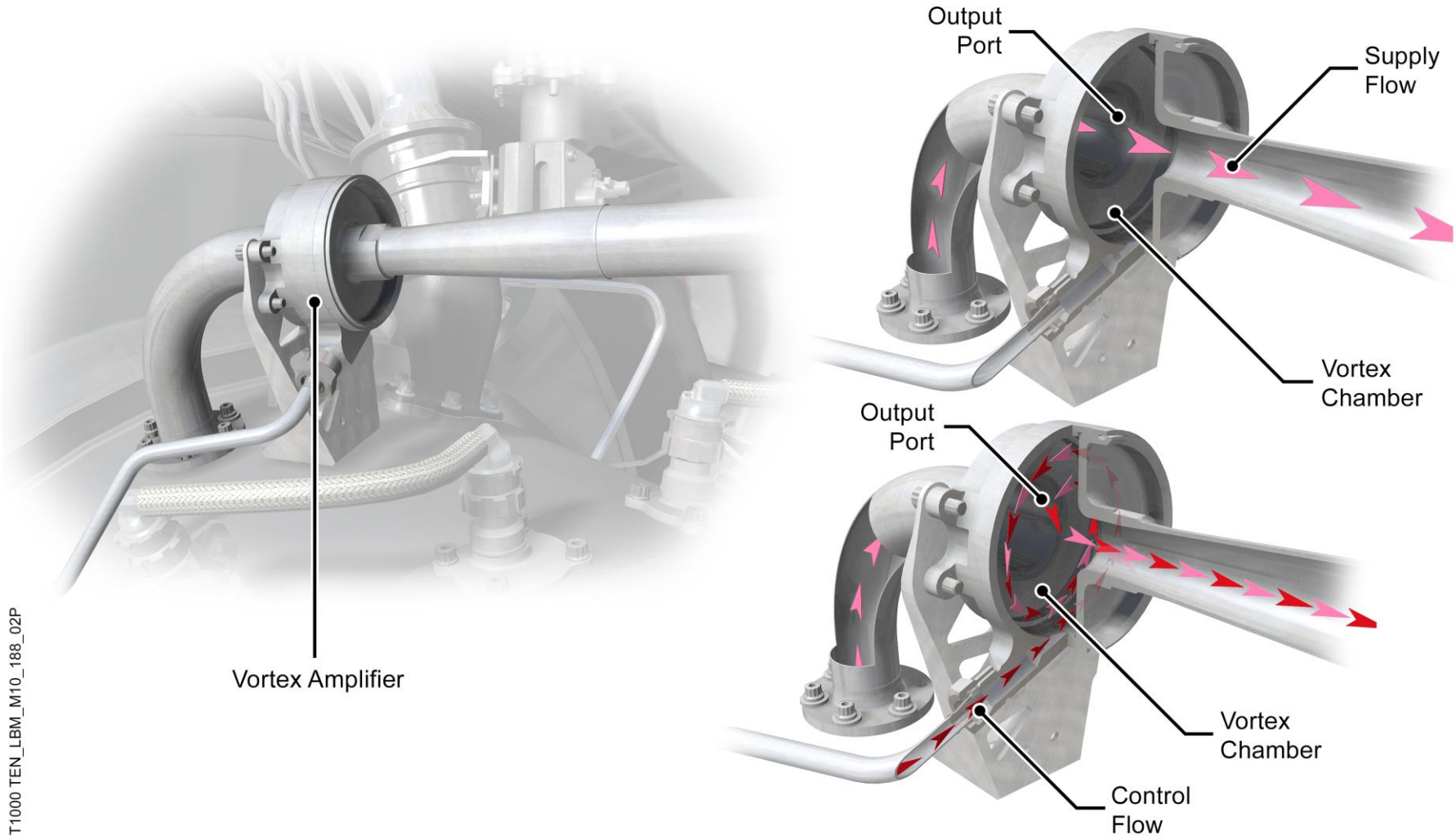

VORTEX AMPLIFIER

© Rolls-Royce plc 2018. Use or disclosure is subject to the legend on the Notice to Holder page

Advanced Turbine Case Cooling (ATCC) System

Introduction

During usual operation it is important the engine operates at its maximum efficiency. For this reason the thermal growth of the HP, IP and LP turbine cases must be maintained.

Purpose

The purpose of the Advanced Turbine Case Cooling (ATCC) system is to control the Turbines case temperature to a level that provides sufficient strength for casing blade containment, and provide the optimum running clearance between them and the turbine blade tips.

Location

The ATCC system is located on the left side of the engine.

Description

The turbine cases are supplied with cool air from the bypass duct to manifolds located around the outside of the HP, IP and LP turbine cases.

Three separate ATCC valves are used to regulate the flow of cooling air supplied to the manifolds.

Modulated HP and IP ATCC valves control the flow of cooling air to the HP and IP turbine cases and a non-modulating LP ATCC valve controls the flow of cooling air to the LP turbine case.

The inlet duct to the LP ATCC Valve also has an off-take port to supply cooling flow to the igniter cables and plugs.

Operation

LP ATCC Valve

The LP ATCC Valve is operated by a dual channel solenoid that receives its command signals from Channel A and B of the EEC. The solenoid is located in the four port solenoid bank on the upper left side of the Intermediate Case beneath the Compressor Fairings (Zone 2).

When the solenoid is energised, HP6 air is allowed to flow to the valve to move it to a fully open position. Fan bypass air is passed through the valve into the LP cooling manifold to reduce the temperature of the casing and maximise turbine efficiency.

When the EEC de-energises the solenoid the HP6 servo air is vented and the LP valve moves to a PARTIALLY OPEN position under spring pressure. A minimum flow is passed through the LP valve to the cooling manifold, to maintain optimum turbine running clearances at conditions other than cruise.

The failsafe position with the solenoid de-energised will result in the LP valve moving to a PARTIALLY OPEN position.

HP/IP ATCC Valves and Actuators

The HP and IP ATCC systems are modulated throughout the whole of the flight phase. Fan bypass air is passed through a combined inlet duct and then diverted into individual HP and IP valves before being directed onto the casings through cooling manifolds to reduce the temperature of the casings. Cooling of the turbine cases reduces the HP and IP turbine blade tip clearances to maximise engine efficiency.

Fuel driven actuators, located in the zone 2, independently control the position of both valves via control cables. An indication of the position of the valves is provided to the EEC via Linear Variable Differential Transformer (LVDT) sensors located on the actuators.

A built in test (BITE) is able to monitor the system for faults.

© Rolls-Royce plc 2018. Use or disclosure is subject to the legend on the Notice to Holder page

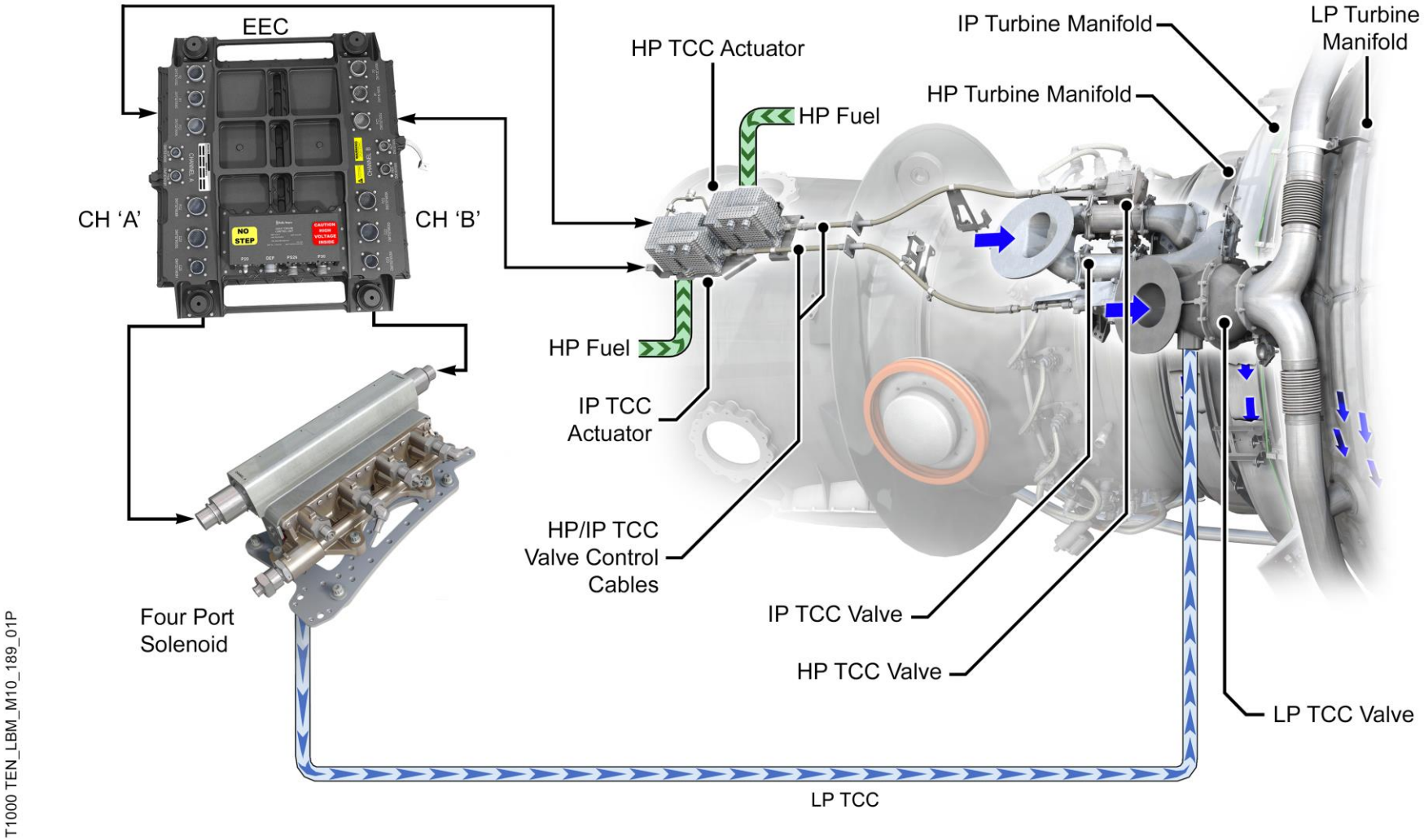

ADVANCED TURBINE CASE COOLING SYSTEM

© Rolls-Royce plc 2018. Use or disclosure is subject to the legend on the Notice to Holder page

Turbine Overheat Detection System

Introduction

To prevent any hazardous events taking place due to the Turbine Discs becoming too hot the Trent 1000 employs a thermocouple system to monitor the HP3 and IP8 air flows used to cool and seal the turbine cavities.

Purpose

The Turbine Overheat detection system monitors the temperature of the cooling air at the front and rear of the IP turbine disc.

Location

The thermocouple probes are located on the IP turbine case.

The front thermocouple assembly is located through one of the IP Nozzle Guide Vanes in the IP turbine case together with the PS42 tapping at the 10 o'clock position and monitors HP3 air.

The rear thermocouple assembly is located in the IP Turbine case at the 6 o'clock position and is inserted through one of the LP1 Nozzle Guide Vanes and monitors IP8 air.

Description

Each assembly has two thermocouple elements; one element sends a signal to EEC Channel A safety computer, and the other sends a signal to Channel B safety computer.

The signal from the forward thermocouple is processed by the EEC as Turbine Cooling Air Front (TCAF), and the rear as Turbine Cooling Air Rear (TCAR).

If the temperature is more than the overheat limit, the EEC broadcasts a signal to that effect over the Common Data Network (CDN); in order for the engine overheat warning indications in the flight deck to be set.

The EEC will trigger an overheat event when:

- Both elements in the same thermocouple indicate the overheat limit has been exceeded or,
- One element indicates the overheat limit has been exceeded and the other element in the same thermocouple has a fault.

Fault Detection

The EEC monitors the thermocouple circuits for faults. The CCRs monitors their interface with the EEC for faults. Information on faults is sent to the flight deck.

A Status message will be seen on the flight deck if either the front or rear temperature is more than the overheat limit.

© Rolls-Royce plc 2018. Use or disclosure is subject to the legend on the Notice to Holder page

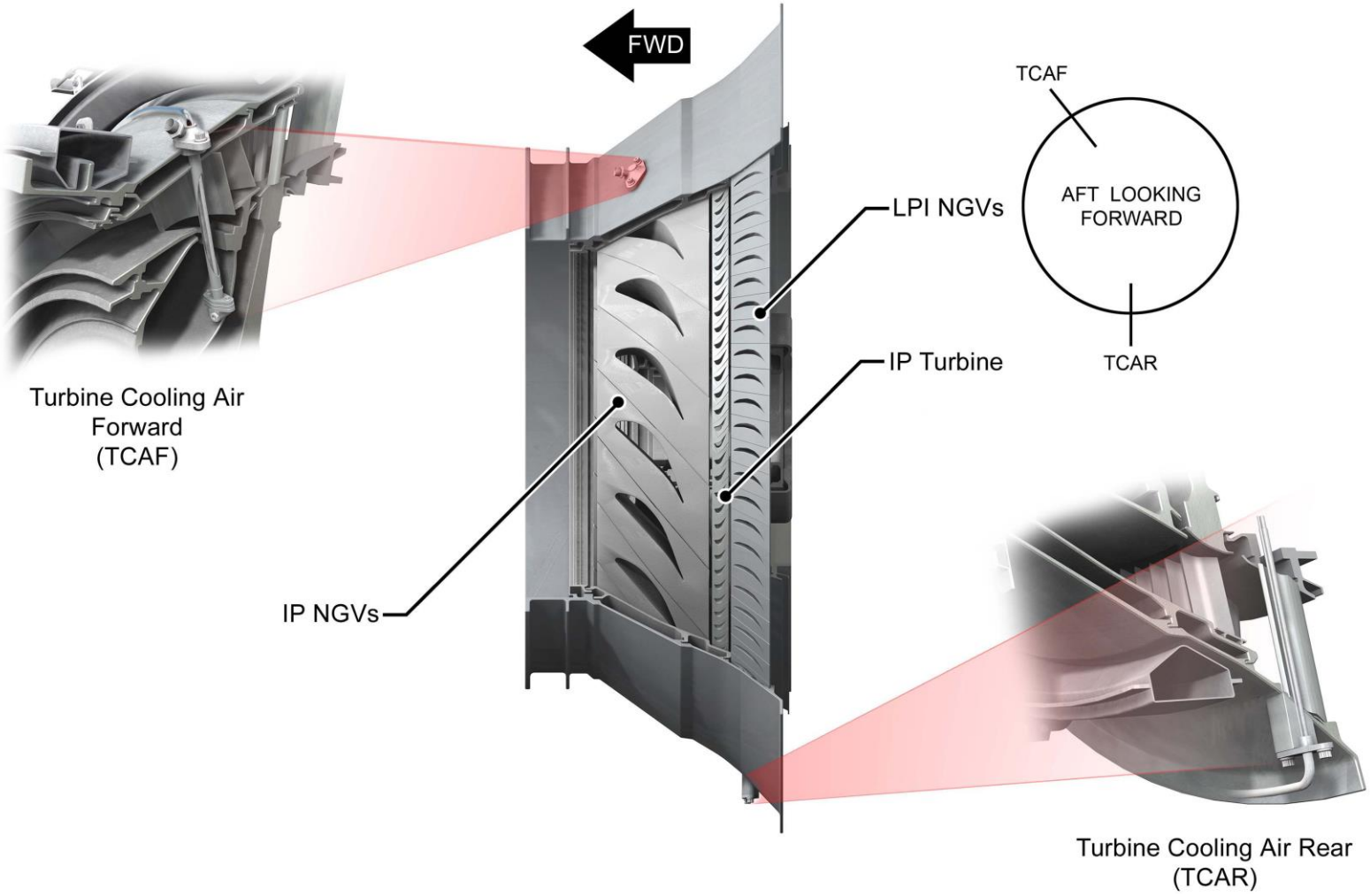

T1000 TEN_LBM_M10_190_01P

TURBINE OVERHEAT DETECTION SYSTEM

© Rolls-Royce plc 2018. Use or disclosure is subject to the legend on the Notice to Holder page

Maintenance Practices

Modulated Air System Valve Lock Out

The following is a brief description of this task. Refer to the AMM for the full description and to the relevant OMSD for correct use of any specialised tooling.

MASCV Inoperative

AMM Task B787-A-R75-00-00-05A-721B-A

1. Make the airplane safe, open the Fan Cowl Doors, deactivate the Thrust Reverser and open the Thrust Reverser.

WARNING: DO THE DEACTIVATION PROCEDURE FOR THE THRUST REVERSER TO PREVENT OPERATION OF THE THRUST REVERSER. ACCIDENTAL OPERATION OF THE THRUST REVERSER CAN CAUSE INJURIES TO PERSONS OR DAMAGE TO EQUIPMENT.

2. Ensure the word OPEN can be seen on the lock-out plate.
3. Remove any unwanted contamination from the surfaces of the lock-out plate that can be seen.
4. Remove two of the three lock-out plate nuts and bolts.
5. Loosen the third lock-out plate nut and bolt enough to allow the lock-out plate to be rotated 90 degrees clockwise.

NOTE: Ensure the air hole can be seen and that the two gaskets stay in position.

6. Hold the lock-out plate in the closed position and re-fit the nuts and bolts removed in step 4.Ensure the word CLOSED can be seen.
7. Tighten the nuts to the torque values found in the AMM.
8. Close the Thrust Reverser, close the Fan Cowl Doors and activate the Thrust Reverser and make the aircraft serviceable.

MASCV Restoration

AMM Task B787-A-R75-00-00-05A-721B-A

1. Make the airplane safe, open the Fan Cowl Doors, deactivate the Thrust Reverser and open the Thrust Reverser.

WARNING: DO THE DEACTIVATION PROCEDURE FOR THE THRUST REVERSER TO PREVENT OPERATION OF THE THRUST REVERSER. ACCIDENTAL OPERATION OF THE THRUST REVERSER CAN CAUSE INJURIES TO PERSONS OR DAMAGE TO EQUIPMENT.

2. Ensure the word CLOSED can be seen on the lock-out plate.
3. Remove the three nuts and bolts that secure the lock-out plate in position.
4. Remove the lock-out plate.
5. Replace the gaskets
6. Install the lock-out plate and secure with the nuts and bolts removed in step 3.
7. Ensure the word OPEN can be seen on the lock-out plate.
8. Tighten the nuts to the torque values found in the AMM.
9. Close the Thrust Reverser, close the Fan Cowl Doors and activate the Thrust Reverser and make the aircraft serviceable.

© Rolls-Royce plc 2018. Use or disclosure is subject to the legend on the Notice to Holder page

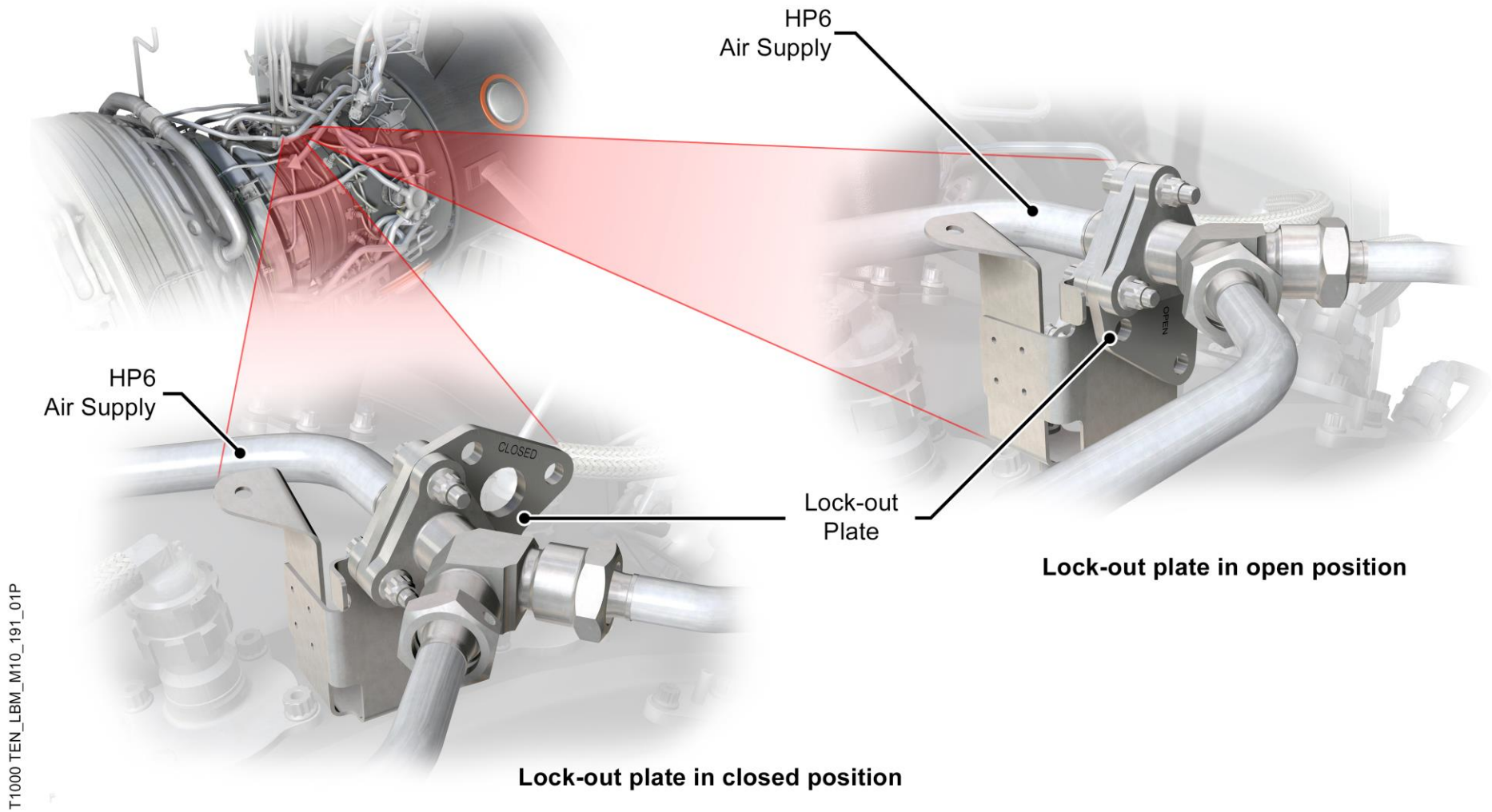

MODULATED AIR SYSTEM VALVE LOCK-OUT

© Rolls-Royce plc 2018. Use or disclosure is subject to the legend on the Notice to Holder page

On Board Maintenance – Ground or Initiated Tests

Introduction

The Initiated tests provide a means by which the maintenance personnel can conduct Engine related tests in a safe and controlled manner. The tests are called up to be carried out as and when directed by the relevant AMM or FIM procedure.

Test Structure

The Central Maintenance Computing Function (CMCF) will generate screens to guide the operator though in the following test steps:

- Test Set-Up (indicate to the operator any necessary warnings, switch selections and instructions required to carry out the test in a safe manner).
- Test In-Progress (Indicates that the test is currently being carried out (operating) – a STOP TEST option is available if required at this point).
- Test Close-Up (switch selections and instructions required to return the system to its original condition).
- Fault Reporting (indicates Passed or Failed condition).

Below is an indication of the Secondary Air System Test, AMM Task B787-A-R71-00-00-34B-300B-A, together with an explanation of the test capabilities.

Note: See the Troubleshooting section for more details on access and conducting Ground Tests.

© Rolls-Royce plc 2018. Use or disclosure is subject to the legend on the Notice to Holder page

Test Name
EEC SYSTEM TEST CHANNEL A
EEC SYSTEM TEST CHANNEL B
ESS ANTI-ICE SYSTEM
FUEL METERING VALVE SYSTEM CHANNEL A
FUEL METERING VALVE SYSTEM CHANNEL B
FUEL RETURN TO TANK VALVE
HANDLING BLEED VALVE SYSTEMS CHANNEL A
HARNESS CHANNEL A
HARNESS CHANNEL B
IGNITION SYSTEM CHANNEL A
IGNITION SYSTEM CHANNEL B
MODULATED AIR SYSTEM
P20/T20 PROBE HEATER
OIL BYPASS VALVE SYSTEM CHANNEL A
OIL BYPASS VALVE SYSTEM CHANNEL B
OIL DEBRIS MONITORING SYSTEM RESET CHANNEL A
OIL DEBRIS MONITORING SYSTEM RESET CHANNEL B
SECONDARY AIR SYSTEM
TURBINE CASE COOLING ACTUATION SYSTEM
THRUST REVERSER INTERLOCK SOLENOID
VFSG THERMAL BYPASS VALVE
VARIABLE STATOR VANE SYSTEM CHANNEL A
VARIABLE STATOR VANE SYSTEM CHANNEL B
VFSG AOHE AIR CONTROL VALVE SYSTEM CHANNEL A
VFSG AOHE AIR CONTROL VALVE SYSTEM CHANNEL B

The Modulated Air System (MAS) Test can be used to verify the operation of the MAS Valve Actuation System for fault confirmation and return to service validation. The test is performed with the engine operating at idle power. The test commands both MAS Valve alternately. Once complete the EEC reports any faults based on feedback from the MAS Valve pressure sensor.

The Secondary Air Control System incorporates a thermocouple to monitor the position of the valve. The test monitors the SAS Valve thermocouples when the valve is scheduled open and closed to detect the temperature change when the SAS Valve switches between IP8 and HP3.

The Turbine Case Cooling Actuation System Test allows the operator to verify the operation of the HP and IP TCC Valve Operation. The test allows the EEC to open and close the HP and IP TCC Valves during wet and dry motoring cycles whilst monitoring the HP and IP TCC LVDT's.

T1000 TEN_LBM_M10_192_01P

© Rolls-Royce plc 2018. Use or disclosure is subject to the legend on the Notice to Holder page

Flight Deck Effects

Introduction

Below is an indication of the associated Flight Deck Effect (FDE) massages with this section (Secondary Air Systems) together with the message type (level), an explanation of its meaning, dispatch restrictions (if any) and expected actions taken by flight or ground crew.

Note: This is for your guidance only. Due to the nature of the aircraft and engine continual development these may change and Rolls-Royce cannot guarantee that they are still current and fully accurate. As such, always refer to the appropriate AMM procedure for reference.

© Rolls-Royce plc 2018. Use or disclosure is subject to the legend on the Notice to Holder page

Message	Type	Dispatch	Meaning
ENG CONTROL L (R)	Status	Do Not Dispatch	The Engine Electronic Controller (EEC) is in a 'No Dispatch' configuration. EEC may be operating with a limited set of engine control parameters and may not be capable of controlling all aspects of the engine.
ENG EEC L (R)	Status	Time Limited Dispatch	Engine control is in a time limited dispatch condition and the control system is operating with reduced redundancy.
ENG SEC AIR VLV L (R)	Advisory	Do Not Dispatch	The Secondary Air System Valve has failed open.
ENG TCA OVHT L (R)	Status	Do Not Dispatch	Engine Turbine Cooling Air (front or rear) has exceeded the operating limit.
ENG IP TCC VALVE CLOSED L (R)	Status	Time Limited Dispatch	The IP Advanced Turbine Case Cooling Valve has failed in the closed position.
ENG IP TCC VALVE OPEN L (R)	Status	Time Limited Dispatch	The IP Advanced Turbine Case Cooling Valve has failed in the open position.
ENG IP TCC VALVE SENSOR L (R)	Status	Time Limited Dispatch	There is a fault with the valve actuator position sensor on the IP Advanced Turbine Case Cooling System.
ENG HP TCC VALVE CLOSED L (R)	Status	Time Limited Dispatch	The HP Advanced Turbine Case Cooling Valve has failed in the closed position.
ENG HP TCC VALVE OPEN L (R)	Status	Time Limited Dispatch	The HP Advanced Turbine Case Cooling Valve has failed in the open position.
ENG HP TCC VALVE SENSOR L (R)	Status	Time Limited Dispatch	There is a fault with the valve actuator position sensor on the HP Advanced Turbine Case Cooling System.
ENG MAS VALVE L (R)	Status	Time Limited Dispatch	One or more of the Modulated Air System Valves are failed open or closed or a solenoid drive fault exists.
ENG MAS VALVE SENSOR L (R)	Status	Time Limited Dispatch	One or more of the Modulated Air System Sensors have failed.
ENG MAS SYS TEST L (R)	Status	Time Limited Dispatch	The Modulated Air System BITE check has failed for 12 consecutive flights.
ENG TURB OVHT SNSR L (R)	Status	Time Limited Dispatch	Left (right) Engine Turbine Overheat detection system has failed. One of the IP Turbine Thermocouples has failed.
ENG TURB OVHT SYS L (R)	Status	Do Not Dispatch	Left (right) Engine Front or Rear Turbine Cooling Air temperature measuring system has been lost.

T1000 TEN_LBM_M10_193_01P

© Rolls-Royce plc 2018. Use or disclosure is subject to the legend on the Notice to Holder page

Secondary Air Systems Reference Wiring Diagrams

Introduction

Below is a wiring schematic of the associated units connected to the Secondary Air System. This is only a representation of the actual connectors but all plugs and connectors are indicated with the reference identifiers. This should be used for reference only and not be used as a definitive document. For a more detailed explanation (pins and sockets for troubleshooting purposes etc) and for further details, then always refer to the actual wiring diagrams as given within the AMM or FIM electronic documentation.

© Rolls-Royce plc 2018. Use or disclosure is subject to the legend on the Notice to Holder page

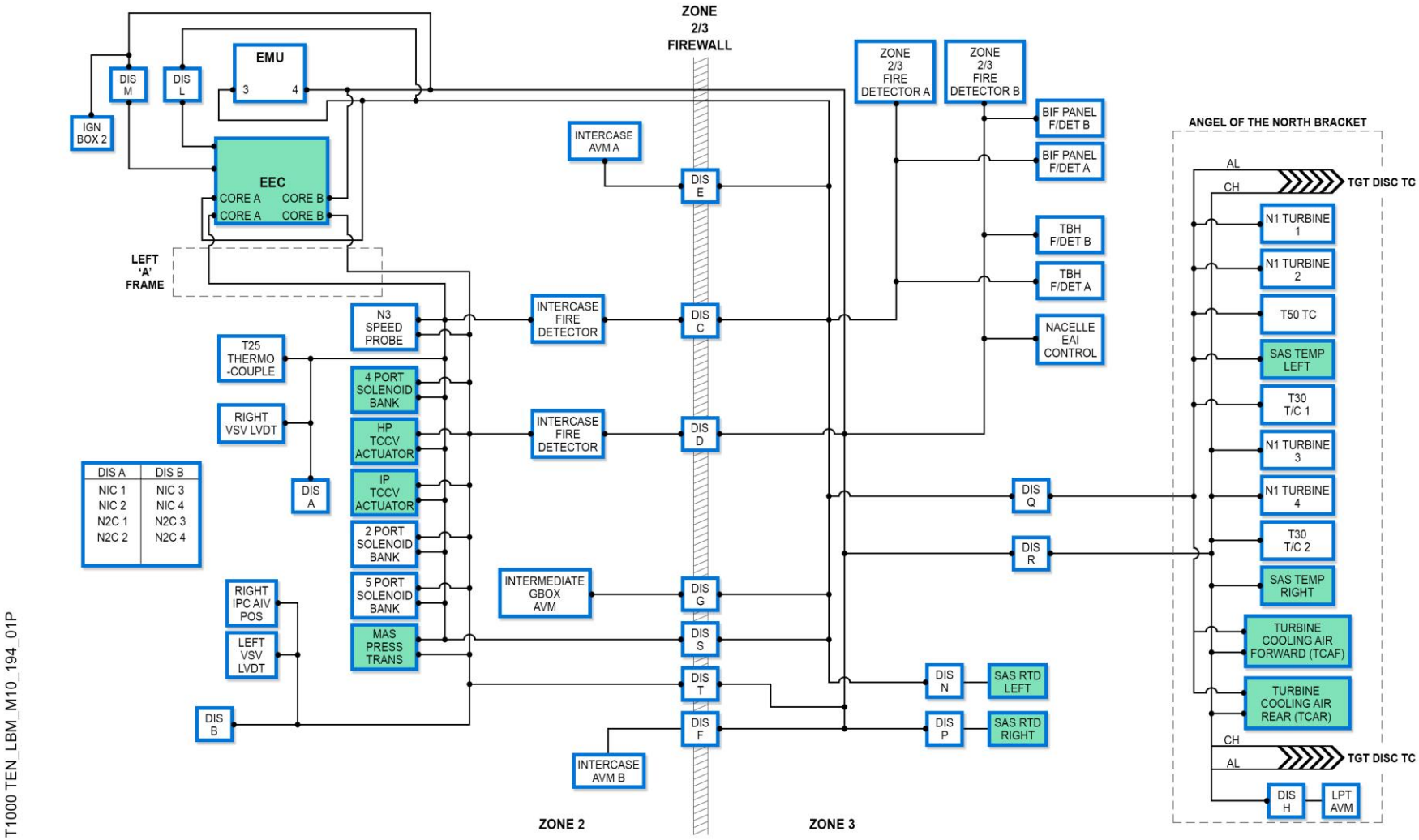

SECONDARY AIR SYSTEM WIRING SCHEMATIC

© Rolls-Royce plc 2018. Use or disclosure is subject to the legend on the Notice to Holder page

Airflow Control System Reference Wiring Diagrams

Introduction

Below is a wiring schematic of the associated units connected to the Airflow Control System. This is only a representation of the actual connectors but all plugs and connectors are indicated with the reference identifiers. This should be used for reference only and not be used as a definitive document. For a more detailed explanation (pins and sockets for troubleshooting purposes etc) and for further details, then always refer to the actual wiring diagrams as given within the AMM or FIM electronic documentation.

© Rolls-Royce plc 2018. Use or disclosure is subject to the legend on the Notice to Holder page

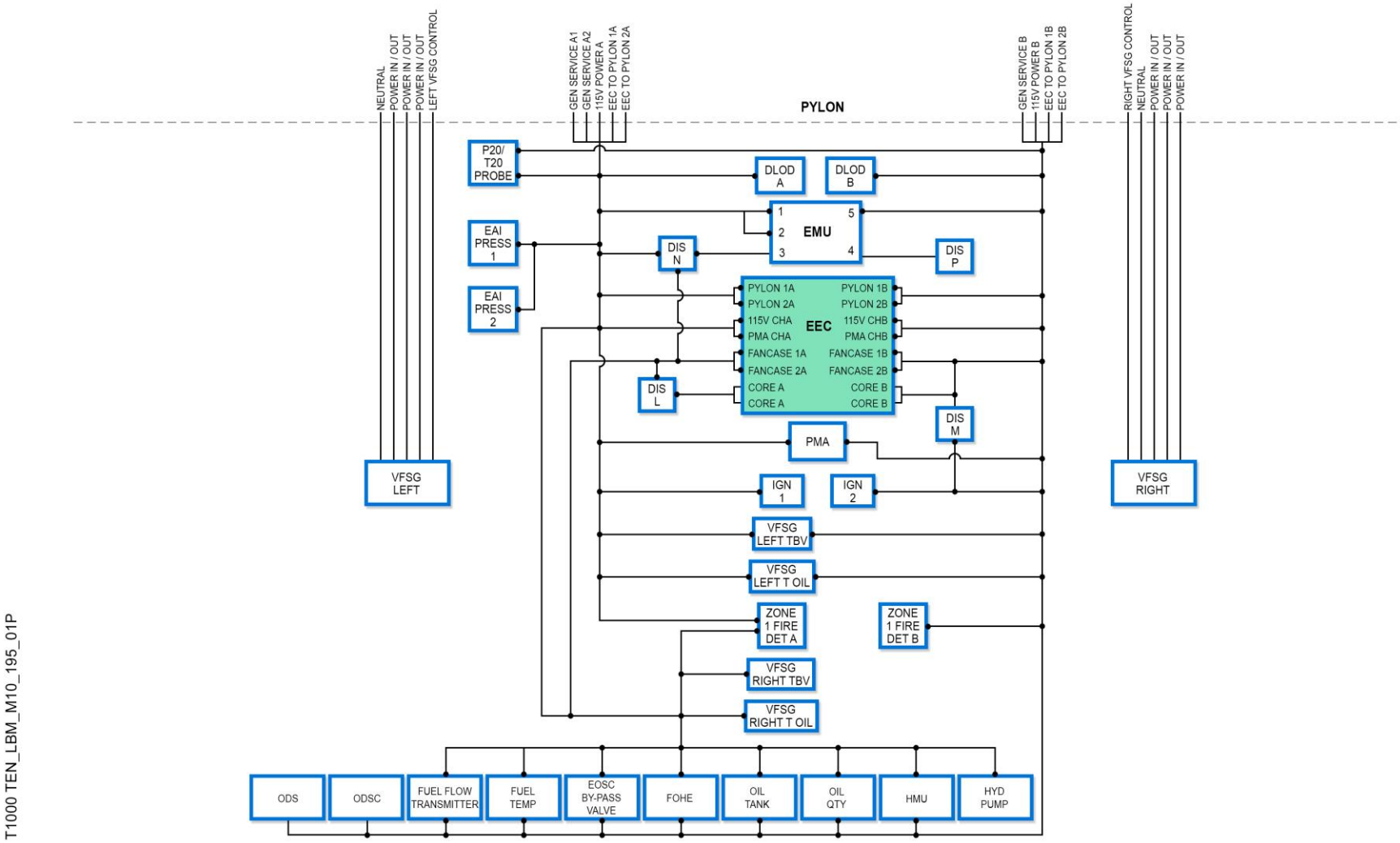

SECONDARY AIR SYSTEM WIRING SCHEMATIC

© Rolls-Royce plc 2018. Use or disclosure is subject to the legend on the Notice to Holder page

END OF SECTION

Section 11 – Ventilation and Fire Protection

ATA Chapters Covered:

75 AND 26

© Rolls-Royce plc 2018. Use or disclosure is subject to the legend on the Notice to Holder page

Accessory Zone Cooling

Introduction

An area of the engine may be described as being a fire zone because of the flammable fluids found in that area.

The Powerplant is divided into three fire zones isolated from each other by fireproof bulkheads and seals. The areas defined as fire zones are as follows:

- Zone 1 - The area around the fan case.
- Zone 2 - The area under the gas generator core fairings.
- Zone 3 - The area under the thrust reverser inner fixed structure.

Calibrated airflows are supplied to the zones to keep the temperature around the powerplant to an acceptable level. These airflows also provide a ventilation function to prevent the accumulation of flammable vapours.

Zone 1

Zone 1 is the annular space between the fan case and the fan cowl doors and contains the accessory gearbox, its associated accessories, fancase components and oil, fuel and hydraulic tubes. The zone is ventilated by ram air through an inlet at the top of the inlet cowl and is exhausted through a vent that is combined with the right VFSG access door.

This design removes the requirement for a zone 1 pressure relief door.

Zone 2

Zone 2 is the annular space between the intermediate compressor case and the gas generator core fairings. The zone contains oil and fuel tubes and the VSV actuators.

Fan air enters the zone through inlets at the front edge of the core fairings and returns to the fan stream via outlets at approx the 3 and 9 o’clock positions close to the root of each A-Frame.

Zone 3

Zone 3 is the area underneath the thrust reverser inner fixed structure. The zone contains fuel lines, oil lines and other accessories.

Fan air enters the zone via short tubes on the thrust reverser inner wall and exits between the aft edge of the thrust reverser inner wall and the exhaust sleeve.

© Rolls-Royce plc 2018. Use or disclosure is subject to the legend on the Notice to Holder page

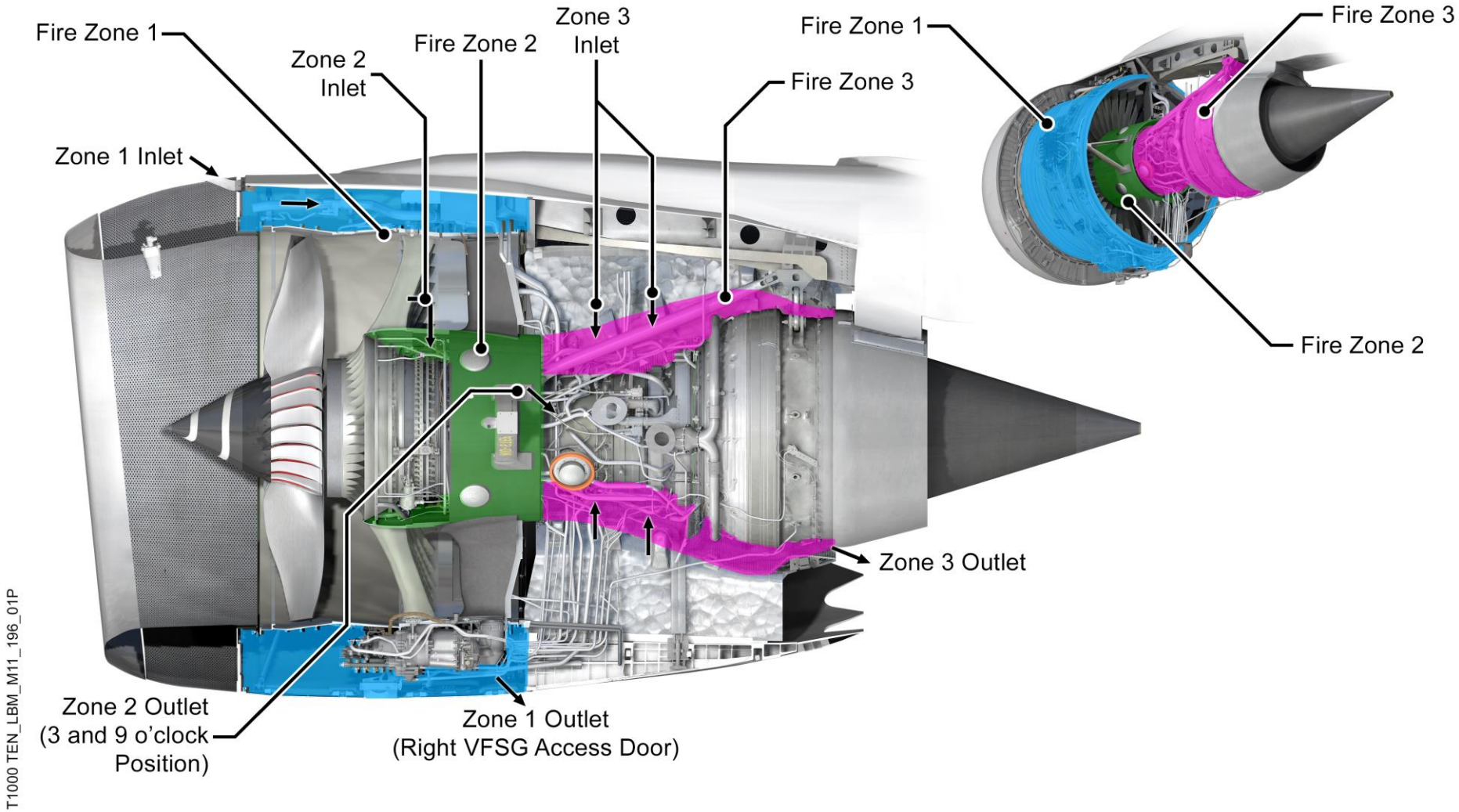

ACCESSORY ZONE COOLING

© Rolls-Royce plc 2018. Use or disclosure is subject to the legend on the Notice to Holder page

Fire and Overheat Detection System

Introduction

There are four thermistor type detectors on the engine. Each system comprises of two elements that are described as Channel 1 and Channel 2. The system can be manually tested using the FIRE / OVHT test switch on the P5 overhead panel.

Purpose

The purpose of the Fire and Overheat System is to monitor the engine and provide the flight deck with the relevant warnings of any occurrences of Fire or Overheat of the fire zones.

Location

The four detectors are located at the exits of the fire zones as described on page 11-6.

Description

Channel 1 and 2 of the detector elements are connected in parallel and then to Channel A and B of the relevant engine MEDC. The MEDC converts the analogue signal from the detectors to a digital format for use by the Common Core System (CCS). This signal is passed to the Propulsion Fire Protection System (PFPS) which is a partitioned software function within the Common Core Resource (CCR) Cabinets; it is this ‘function’ that provides the indications to the EICAS.

Operation

Overheat

If an overheat condition occurs, the fire and overheat detection function in the CCR cabinets will:

- Illuminate the Master Caution (amber) light.
- Display the Caution Message (OVERHEAT ENG L (R)) on EICAS.
- Sound the aural warning (beeper).

The Master Caution and beeper are inhibited during segments of the takeoff phase.

The indications return too normal when the overheat condition stops.

Fire

If an engine fire occurs, the fire detection function in the CCR cabinets will:

- Illuminate the Master Warning (red) light.
- Display the Warning Message (FIRE ENG L (R)) on EICAS.
- Sound the aural warning (bell) warning on the flight deck.
- Illuminate the relevant Fire Switch.
- Release the Fire Switch lock solenoid.
- Illuminate the relevant Fuel Control Switch fire warning light.

The Master Warning and aural warning are inhibited during segments of the take-off phase.

When the fire is extinguished and temperatures decrease the fire indications return to normal.

Nacelle Temperature Recording

The fire protection function the average temperature of the detection systems. This data is sent to the Airplane Condition Monitoring Function (ACMF).

© Rolls-Royce plc 2018. Use or disclosure is subject to the legend on the Notice to Holder page

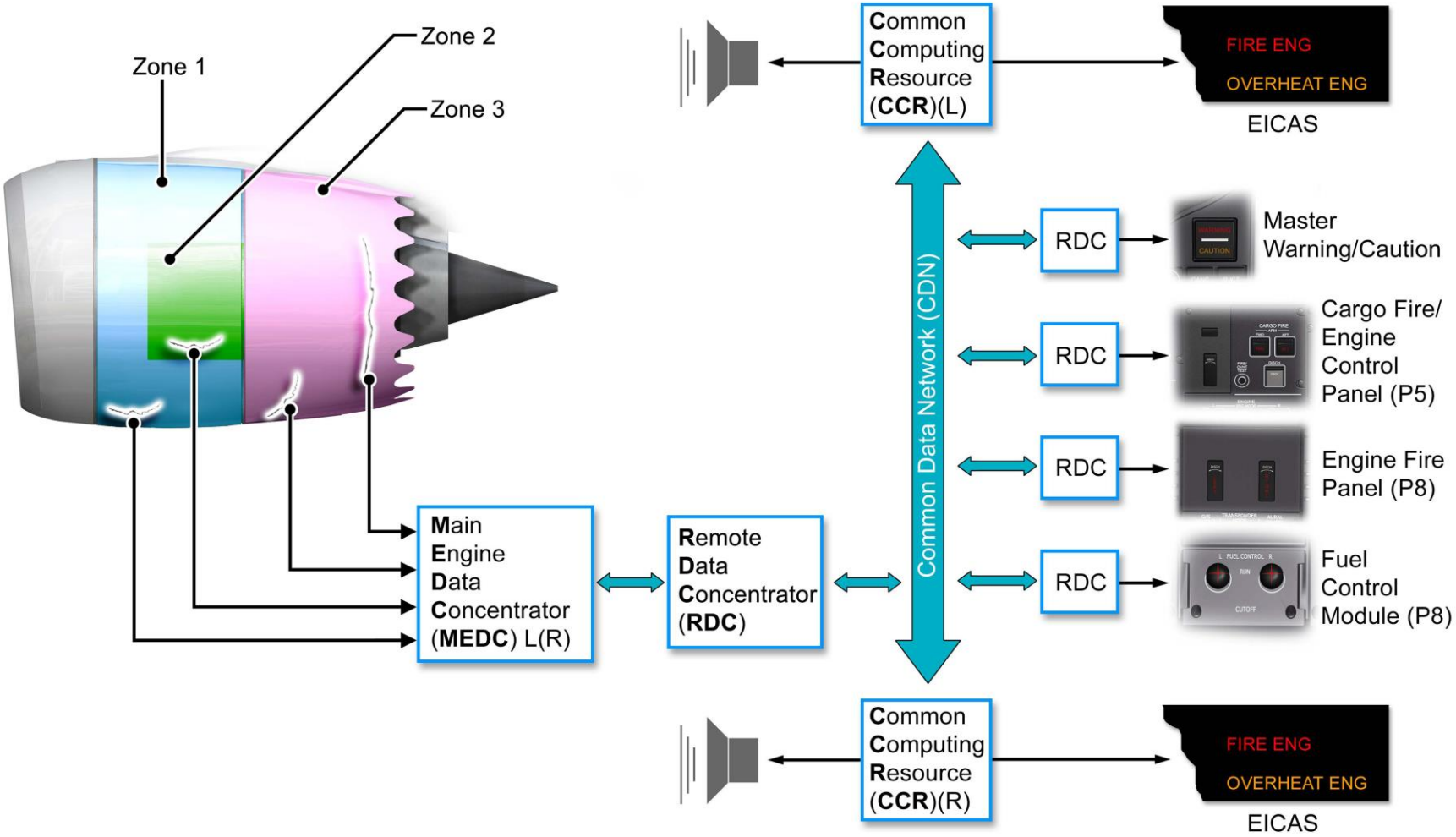

T1000 TEN_LBM_M11_197_01P

FIRE AND OVERHEAT DETECTION SYSTEM

© Rolls-Royce plc 2018. Use or disclosure is subject to the legend on the Notice to Holder page

Fire and Overheat Detector Elements

Purpose

The engine fire detector elements are designed to monitor the temperature in the engine nacelles.

Location

There are four Fire and Overheat Detector Assemblies each located at the exit of the three fire zones. Each detector has two elements which are linked together to form two loops described as Channel 1 and Channel 2.

Three of the detectors are supported in position by quick release clamps, bushing and a support tube. The LP Turbine detectors use the same clamping method but do not utilise a support tube. Instead they are attached directly to the Exhaust Case via brackets.

The four Fire and Overheat Detectors are connected in parallel and located in the Fire Zones as follows:

- Zone 1 - Along the underside of the External Gearbox.
- Zone 2 - Bottom half of the zone and around the Intermediate Gearbox.
- Zone 3 - Around the LP Turbine.
- Zone 3 - Rear of bifurcation.

There is also a fire detector mounted to the underside of the pylon in the Fire Zone 3 but this is not discussed or shown on the graphic below.

Functional Description

The fire detection function monitors the rate of change of resistance within the detectors, which if it changes beyond a threshold value; the system will indicate a fault.

As the temperature increases, the resistance in the loop decreases. When the resistance decreases to the overheat threshold, an overheat indication occurs.

If the resistance decreases further to the fire threshold, a fire warning occurs.

When compared to a real overheat and / or fire condition, the electrical resistance within the loop decreases faster with a fault than with an overheat and / or fire. The rate of change of the resistance is measured and used to determine if there is a system fault or a real fire or overheat condition has occurred.

When the fire or overheat condition is gone, the resistance increases to the reset point and the flight deck indications are returned to normal.

The system is configured with “AND / OR” logic, therefore both channels are ideally required to detect the fire to trigger the alarm (A and B). If one channel is inoperative the remaining functional Channel is used (A fail, B fire) to provide the warning annunciation on the flight deck.

Because the fire detectors are in parallel it allows the system to determine which element is functional. If both elements on a single detector become unserviceable then a message on EICAS will seen. The PFPS will then use the remaining serviceable detectors to monitor for fire and overheat, however, the system in this condition is non-dispatchable.

© Rolls-Royce plc 2018. Use or disclosure is subject to the legend on the Notice to Holder page

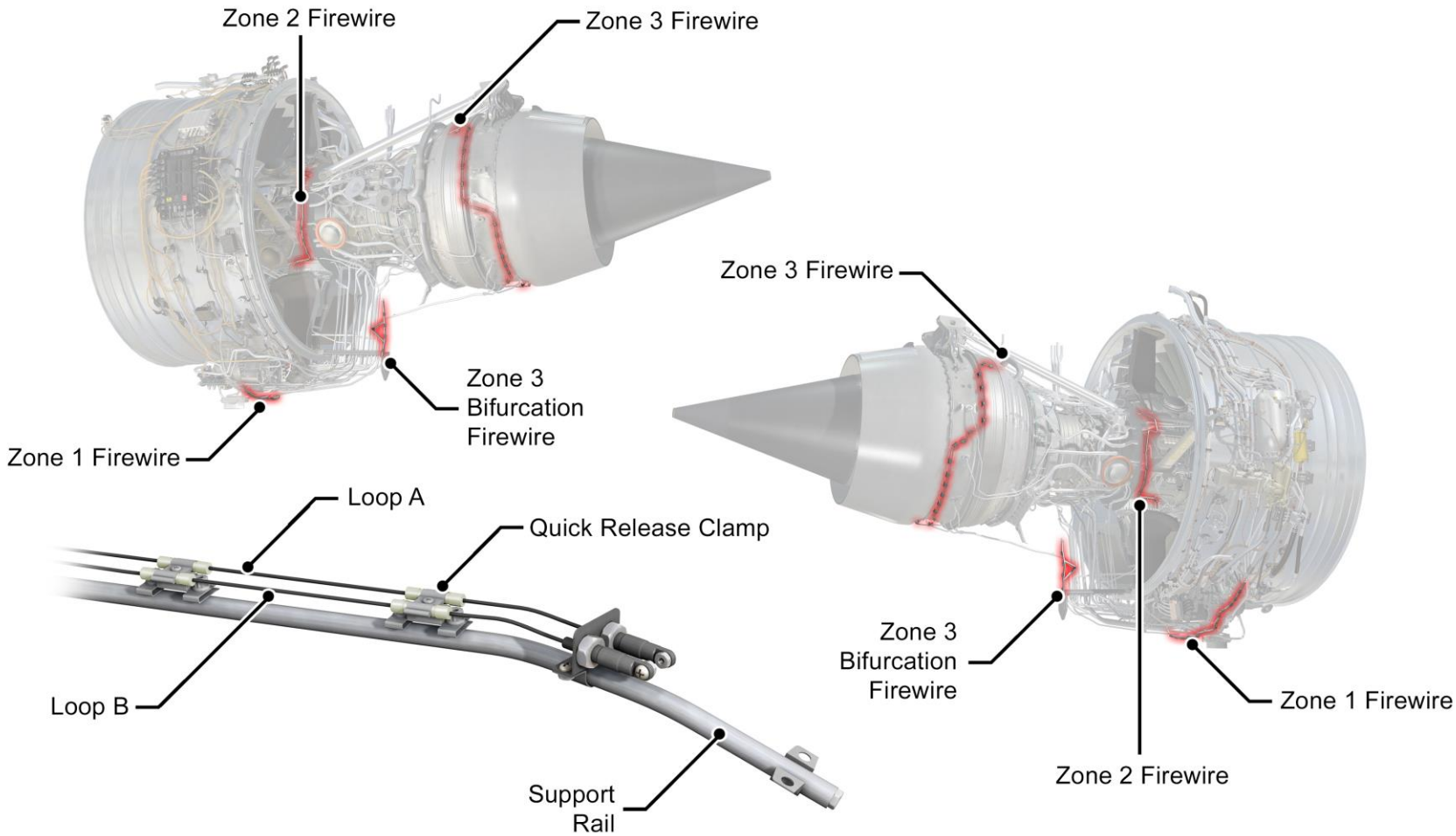

T1000 TEN_LBM_M11_198_01P

FIRE AND OVERHEAT DETECTOR ELEMENTS

© Rolls-Royce plc 2018. Use or disclosure is subject to the legend on the Notice to Holder page

Fire Extinguishing System

Purpose

To enable the release of the extinguishing medium into the three fire zones and extinguish any fires that may be present.

Location

Two fire bottles are located in the forward cargo hold for the storage of the extinguishing medium, and are connected by pipework to the discharge nozzles within each of the three fire zones. The operating handles are located on the flight deck.

Description

The fire extinguishing system consists of two identical fire bottles that contain a Halon fire extinguishing agent.

There are two fire handles at the rear of the Engine Fire Control Panel (P8 panel), one for each engine. The handles are locked by a solenoid which, when energised by the PFPS via an RPDU, will remove the lock to allow them to be operated. A manual override button below the handle allows the switches to be operated if the solenoid does not energise. A light on the relevant switch also illuminates when the Fire/Overheat condition is detected to indicate which engine is affected. Operation of the fire handles allows the extinguishant to be discharged from the fire bottles into each fire zone. Each bottle allows for one attempt to be made at extinguishing the fire on each engine.

The discharge assembly on each fire bottle has a small squib explosive device. A squib consists of an electrically operated explosive that, when discharged, fires a pin through a disc to release the extinguishant.

To arm the squib the fire handle is first pulled in a vertical direction. By rotating the handle to the DISCH 1, or the DISCH 2 positions, an electric current from the fire extinguishing circuit fires the squib. This releases the extinguishant through the discharge port to the discharge nozzles in the three fire zones of the engine.

There are a total of four fire nozzles for each engine, providing for the following:

- Zone 1.
- Zone 2 via the upper splitter fairing.
- Zone 3 – Front.
- Zone 3 – Rear.

When the bottles have been discharged, or the pressure is low, a pressure transducer located on the fire bottle will, via an RDC and the PFPS, illuminate the ENG BTL 1 (2) DISCH light on the Engine Fire Control Panel. The advisory message BTL 1(2) DISCH ENG L (R) will also appear on EICAS.

© Rolls-Royce plc 2018. Use or disclosure is subject to the legend on the Notice to Holder page

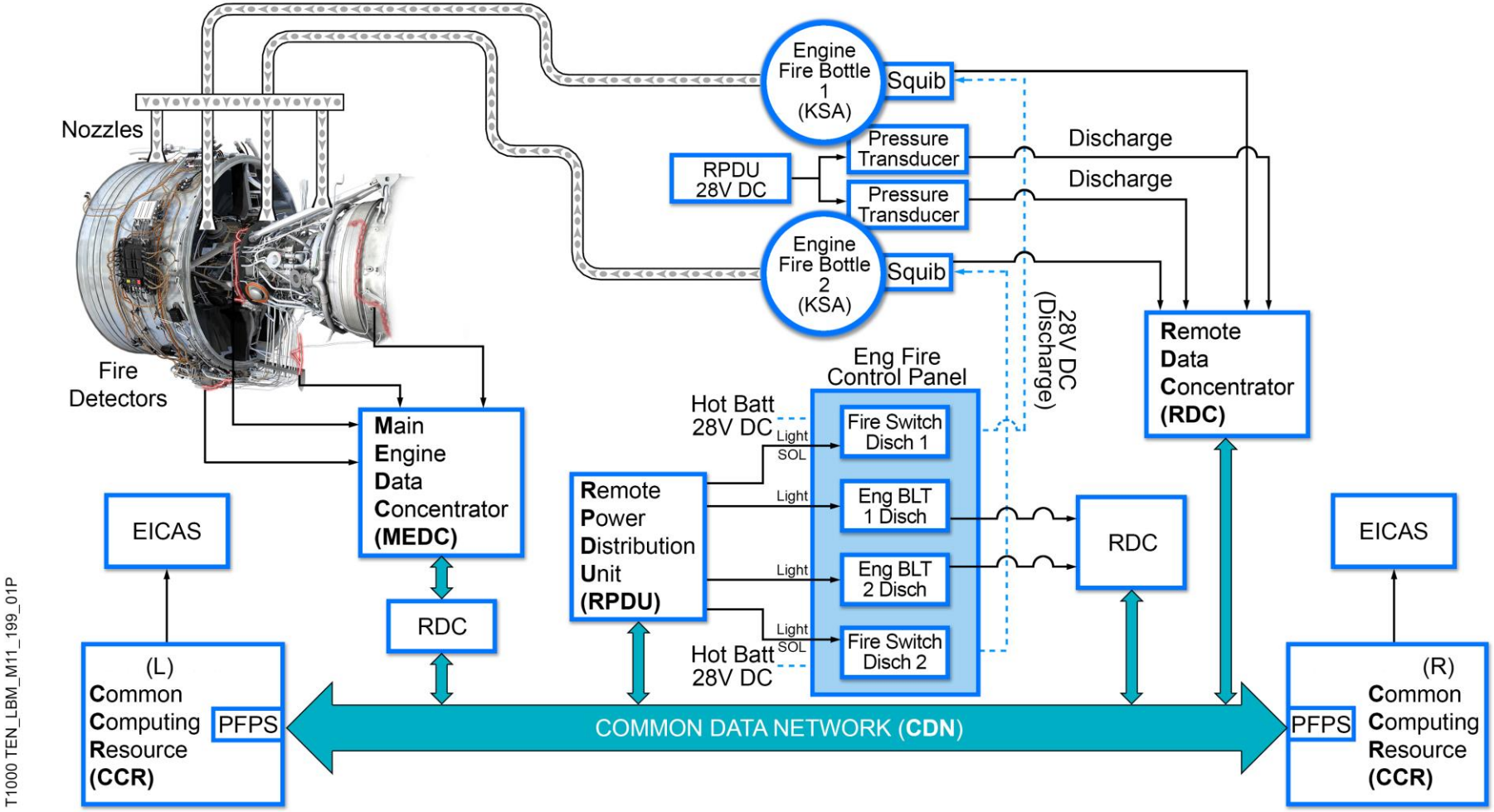

FIRE EXTINGUISHING SYSTEM

© Rolls-Royce plc 2018. Use or disclosure is subject to the legend on the Notice to Holder page

Duct Leak Overheat Detection System (DLODS)

Purpose

The Duct Leak and Overheat Detection System (DLODS) provide a flight deck indication of any pneumatic leaks from the Nacelle Anti-icing Ducting on the LP Compressor Case.

Location

A number of detectors are used within the system; the engine detector is situated adjacent to the Engine anti-ice duct on the top left of the LP Compressor Case (Zone 1).

Description

Each overheat detector has two elements described as loop 1 and loop 2, which are located inside a metal frame.

Each element has an inner and outer conductor with a separator material between. The separator is an insulator when the surrounding temperature is less than the overheat set point. When the surrounding temperature increases above the set point the separator becomes a conductor.

Operation

The detectors continually monitor the temperatures in their area of location. If the detector detects an overheat condition, the signal will be sent to the MEDC which will broadcast it over the CDN to the Left and Right Common Core Resource (CCR) cabinets. Inside the CCR is the Propulsion Fire Protection System (PFPS) function that recognises this signal as a leak.

The CCR, will provide the flight deck with an indication of the overheat condition and illuminate the Master Caution, sound the aural tone and give a message on the EICAS screen.

The PFPS will then broadcast a signal back along the CDN to the MEDC that will command the Core Engine Anti-Ice Valve to the closed position.

The PFPS function continuously monitors the detectors for open and short circuits and will provide a status message to show which detector has failed.

© Rolls-Royce plc 2018. Use or disclosure is subject to the legend on the Notice to Holder page

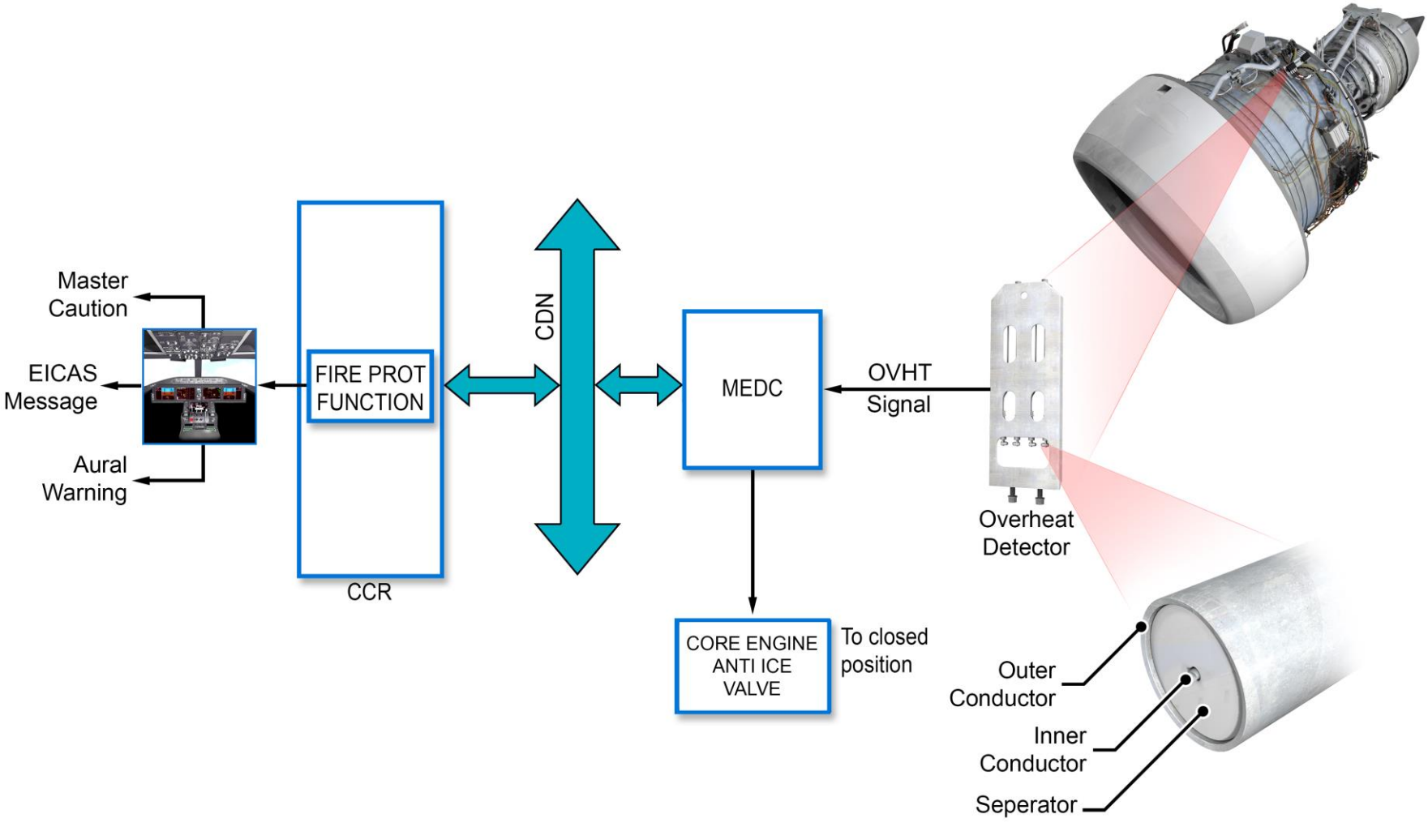

T1000 TEN_LBM_M11_200_01P

DUCT LEAK OVERHEAT DETECTION SYSTEM

© Rolls-Royce plc 2018. Use or disclosure is subject to the legend on the Notice to Holder page

Flight Deck Effects

Introduction

Below is an indication of the associated Flight Deck Effect (FDE) massages with this section (Ventilation and Fire Protection) together with the message type (level), an explanation of its meaning, dispatch restrictions (if any) and expected actions taken by flight or ground crew.

Note: This is for your guidance only. Due to the nature of the aircraft and engine continual development these may change and Rolls-Royce cannot guarantee that they are still current and fully accurate. As such, always refer to the appropriate AMM procedure for reference.

© Rolls-Royce plc 2018. Use or disclosure is subject to the legend on the Notice to Holder page

Message	Type	Dispatch	Meaning
OVERHEAT ENG L (R)	Caution	Do Not Dispatch	Flight Crew Awareness and Action and Dispatch determination Left (right). Engine turbine cooling air or Iptos detected.
ENG FIRE L (R)	Warning	Do Not Dispatch	Left (Right Engine fire is Detected)

© Rolls-Royce plc 2018. Use or disclosure is subject to the legend on the Notice to Holder page

Ventilation and Fire Protection System Reference Wiring Diagrams

Introduction

Below is a wiring schematic of the associated units connected to the Ventilation and Fire Protection System. This is only a representation of the actual connectors but all plugs and connectors are indicated with the reference identifiers. This should be used for reference only and not be used as a definitive document. For a more detailed explanation (pins and sockets for troubleshooting purposes etc) and for further details, then always refer to the actual wiring diagrams as given within the AMM or FIM electronic documentation.

© Rolls-Royce plc 2018. Use or disclosure is subject to the legend on the Notice to Holder page

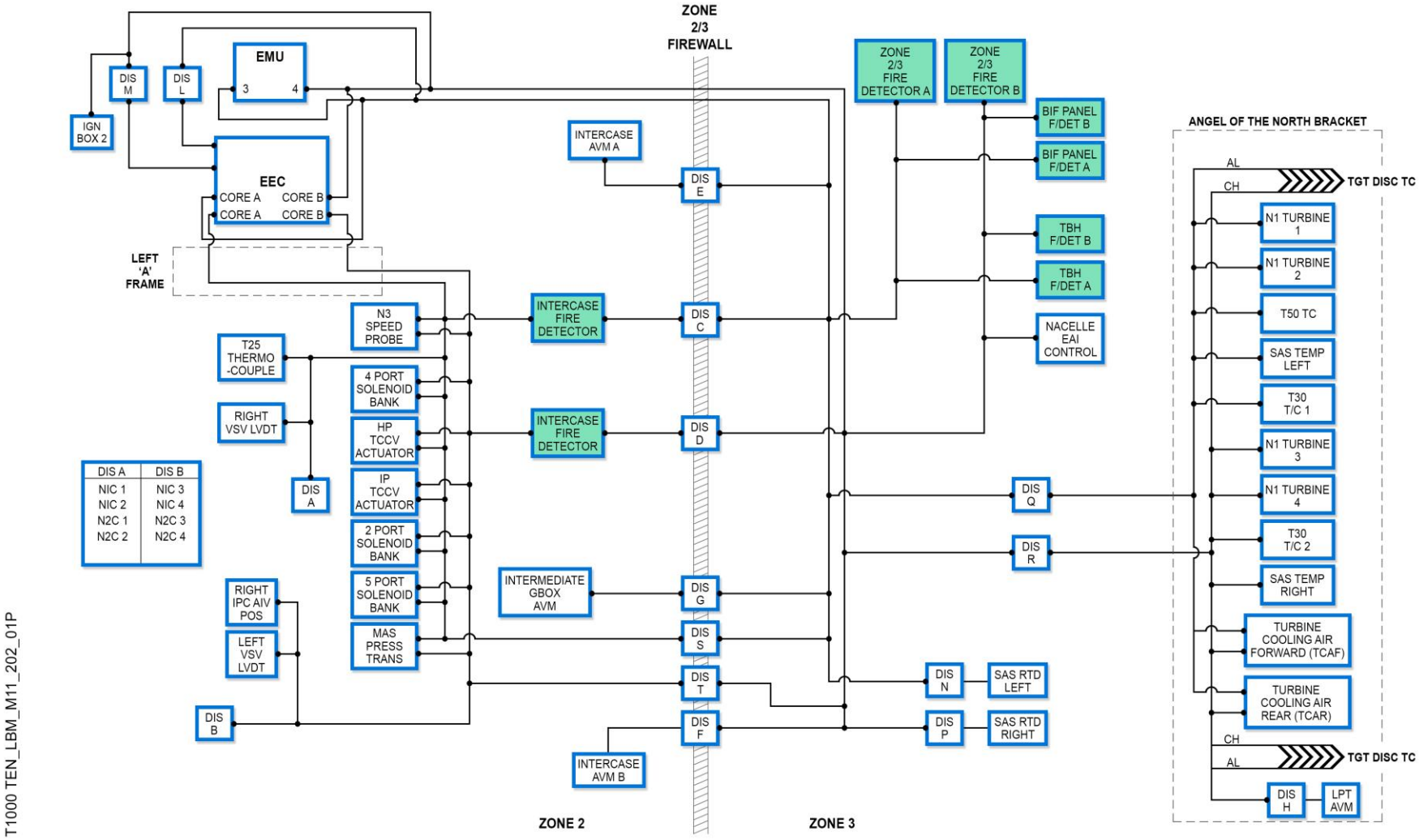

VENTILATION & FIRE PROTECTION WIRING SCHEMATIC

© Rolls-Royce plc 2018. Use or disclosure is subject to the legend on the Notice to Holder page

Airflow Control System Reference Wiring Diagrams

Introduction

Below is a wiring schematic of the associated units connected to the Airflow Control System. This is only a representation of the actual connectors but all plugs and connectors are indicated with the reference identifiers. This should be used for reference only and not be used as a definitive document. For a more detailed explanation (pins and sockets for troubleshooting purposes etc) and for further details, then always refer to the actual wiring diagrams as given within the AMM or FIM electronic documentation.

© Rolls-Royce plc 2018. Use or disclosure is subject to the legend on the Notice to Holder page

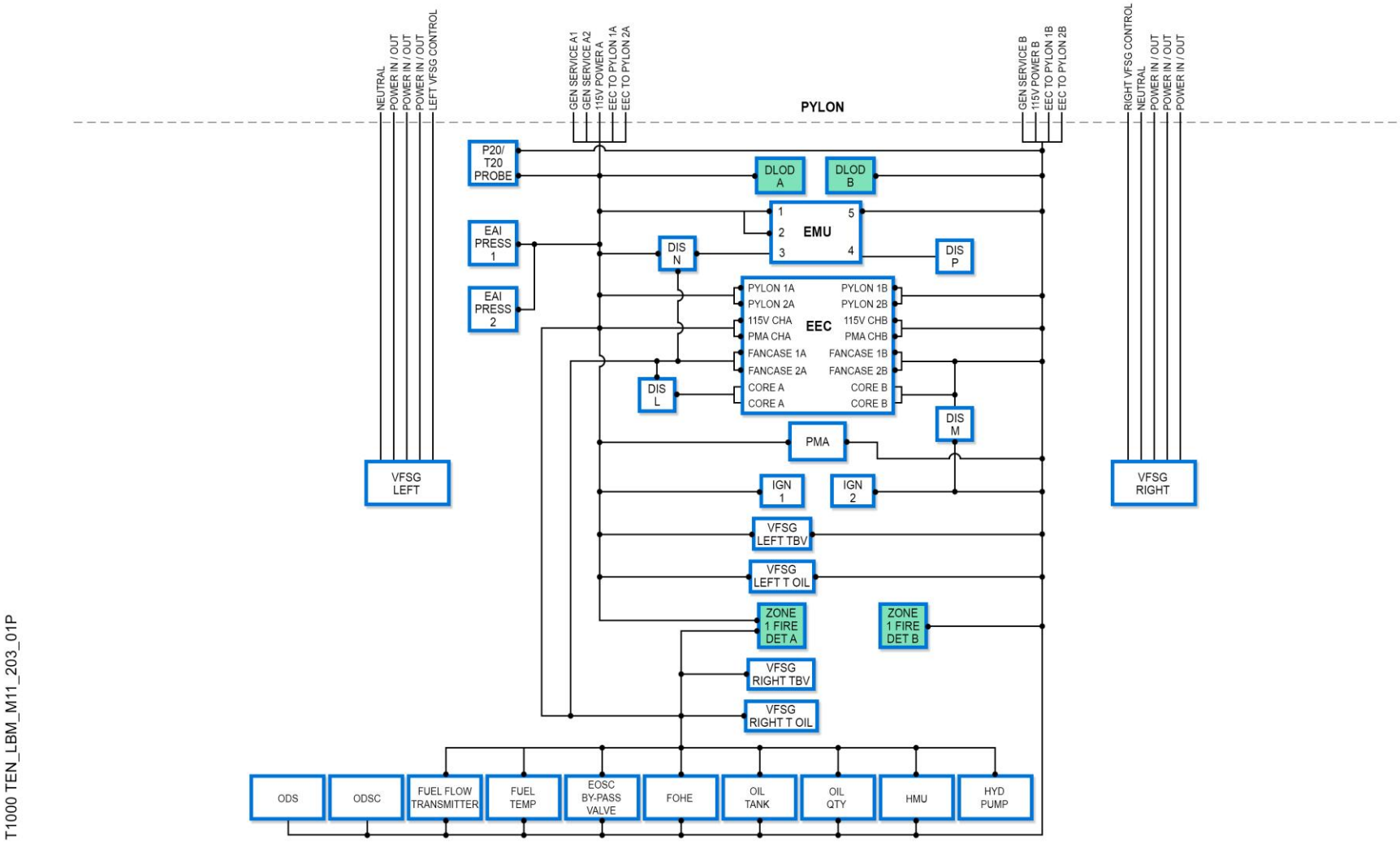

T1000 TEN_LBM_M11_203_01P

VENTILATION & FIRE PROTECTION WIRING SCHEMATIC

© Rolls-Royce plc 2018. Use or disclosure is subject to the legend on the Notice to Holder page

END OF SECTION

Section 12 – Ice Protection System

ATA Chapter Covered:

30

© Rolls-Royce plc 2018. Use or disclosure is subject to the legend on the Notice to Holder page

Engine Ice Protection Areas

Introduction

When the engine is operating in conditions of low temperatures and high humidity damage to the engine or loss of performance may take place due to the formation of ice.

Ice formation may occur on the leading edge of the inlet cowl, spinner and the P20 / T20 probe. Also, due to the large diameter fan producing a lower pressure ratio, and thus a lower temperature rise, than previous Trent Engines, ice may form on the Engine Section Stator (ESS) vanes located at the inlet of the IP Compressor.

Purpose

To prevent ice formation, anti-icing protection is provided to the following areas:

- The Spinner (Dynamic).
- The P20 / T20 Probe (Thermal).
- *Engine Anti-Ice - Core Anti-Ice System (Thermal).
- *Engine Anti-Ice - Engine Inlet Cowl (Thermal).

***Note:** For the purposes of learning the Engine Anti-Ice systems and for these training notes only, the two systems have been separated.

Description

Spinner

A solid rubber cone at the tip of the spinner vibrates when the engine is running which naturally breaks up and dislodges any ice that forms. Any ice shed from the spinner is directed down the Fan Bypass Duct thus preventing damage to the core.

P20/T20 Probe Heat

The P20 / T20 probe is installed inside the engine inlet cowl at the 11 o'clock position when viewed from the rear. The probe measures engine intake total air pressure and temperature for use by the EEC in calculating TPR.

To prevent ice build up and ensure an accurate P20 signal is measured, the P20 / T20 probe is heated electrically using aircraft 115V AC supply from the aircraft via an RPDU.

The EEC broadcasts the probe heat command to the RPDU over the CDN as a function of LP speed (approx 5.5% N1).

Engine Anti-Ice - Core Anti-Ice System

Engine Section Stators (ESS) Vanes.

The ESS vanes are located at the inlet to the IP Compressor behind the LP Compressor. To ensure that ice does not build up on the ESS vanes IP Compressor Stage 8 air is ducted into the vanes and into the gas path via a single ESS Anti-Ice Valve and manifold. The valve is located on the right side of the IP Compressor in Fire Zone 2 and is controlled by the EECS, and operated by HP6 air.

Engine Anti-Ice - Engine Inlet Cowl

The area inside the D-section of the inlet cowl leading edge is heated by hot air from the HP Compressor Stage 3. There are two valves in the system a Core Engine Anti-Ice Valve and a Fan Engine Anti-Ice Valve.

Both Anti-Ice systems are described in the following pages.

© Rolls-Royce plc 2018. Use or disclosure is subject to the legend on the Notice to Holder page

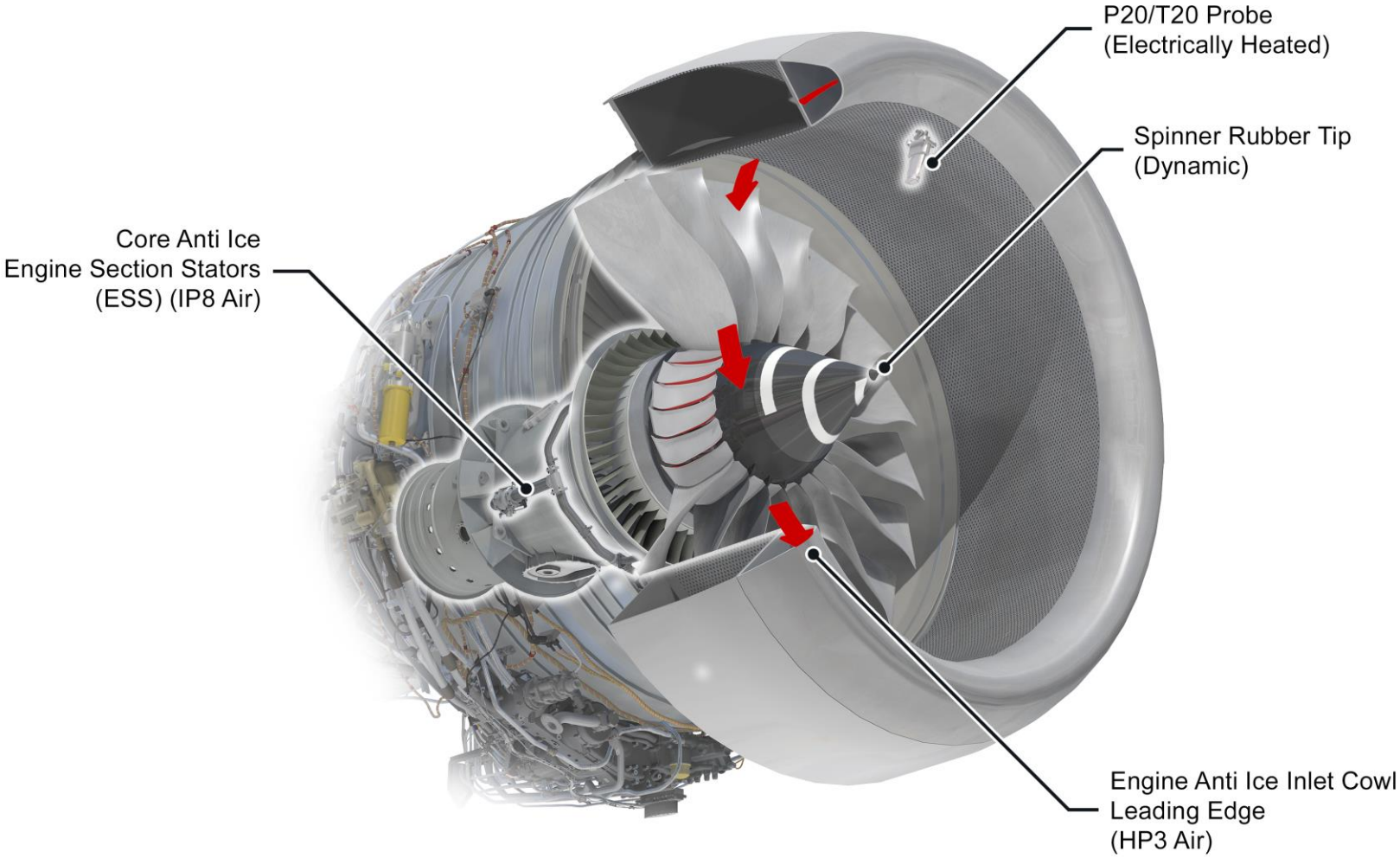

T1000 TEN_LBM_M12_204_01P

ENGINE ICE PROTECTION AREAS

© Rolls-Royce plc 2018. Use or disclosure is subject to the legend on the Notice to Holder page

Engine Anti-Ice - Core Anti Ice System

Engine Section Stators (ESS)

Introduction

The ESS vanes are located at the inlet to the IP Compressor at the rear of the LP Compressor. Due to the low-pressure pressure rise across the LP Compressor, and thus a low temperature rise, there is an increased probability that ice may form on the ESS vanes and VIGVs under certain conditions. Therefore to prevent the formation of ice IP Compressor Stage 8 air is ducted into the ESS vanes and onto the VIGVs.

Purpose

To prevent the build up of ice on the ESS vanes, the outer annulus of the IP Compressor Inlet and the VIGV's.

System Overview

The core anti-ice system consists of the following units:

- Engine Electronic Controller (EEC).
- An Engine Section Stator Anti-Ice Valve (ESS Valve).
- An Engine Anti-Ice Pressure Sensor.
- A dual channel ESS Solenoid.

The EEC

The EEC controls the ESS valve to the open or closed position via a solenoid as a function of T24, T0, N1, altitude, an in-flight / ground status, and nacelle anti-ice selection. It also provides a once-per-flight, open and close BITE function for the valve broadcasting any faults over the CDN for use by EEC and aircraft systems.

ESS Valve and Pressure Sensor

The two-position ESS valve is located in the fire zone 2 at the 3 o'clock position. The valve is controlled by the EEC and operated by HPC stage 6 air which is supplied from a solenoid in the four port solenoid pack. The valve is spring loaded to the open position and relies on engine airflow at start-up to initially close the valve. HP6 air is then used to open the valve as required.

Opening the valve allows warm IP8 air to enter passages within the EES vanes to heat the ESS. The warm IP8 air exits the ESS Vane at the trailing edge to provide heat to the trailing edge.

The warm IP8 air also passes through injection holes, positioned in the outer annulus of the IP Compressor Inlet between the ESS vanes, and into the gas path to heat the VIGVs.

A pressure transducer located on the ESS valve provides feedback to the EEC as to the status of anti-icing airflow to the ESS Vanes. The EEC uses this signal to determine the position of the ESS Valve.

At certain conditions the engine handling bleed valve logic within the EEC may request the ESS valve to open.

ESS Solenoid

Once energised, an EEC controlled, dual channel solenoid located in the four port solenoid bank, allows HP6 air to open the ESS Valve when the engine is running.

© Rolls-Royce plc 2018. Use or disclosure is subject to the legend on the Notice to Holder page

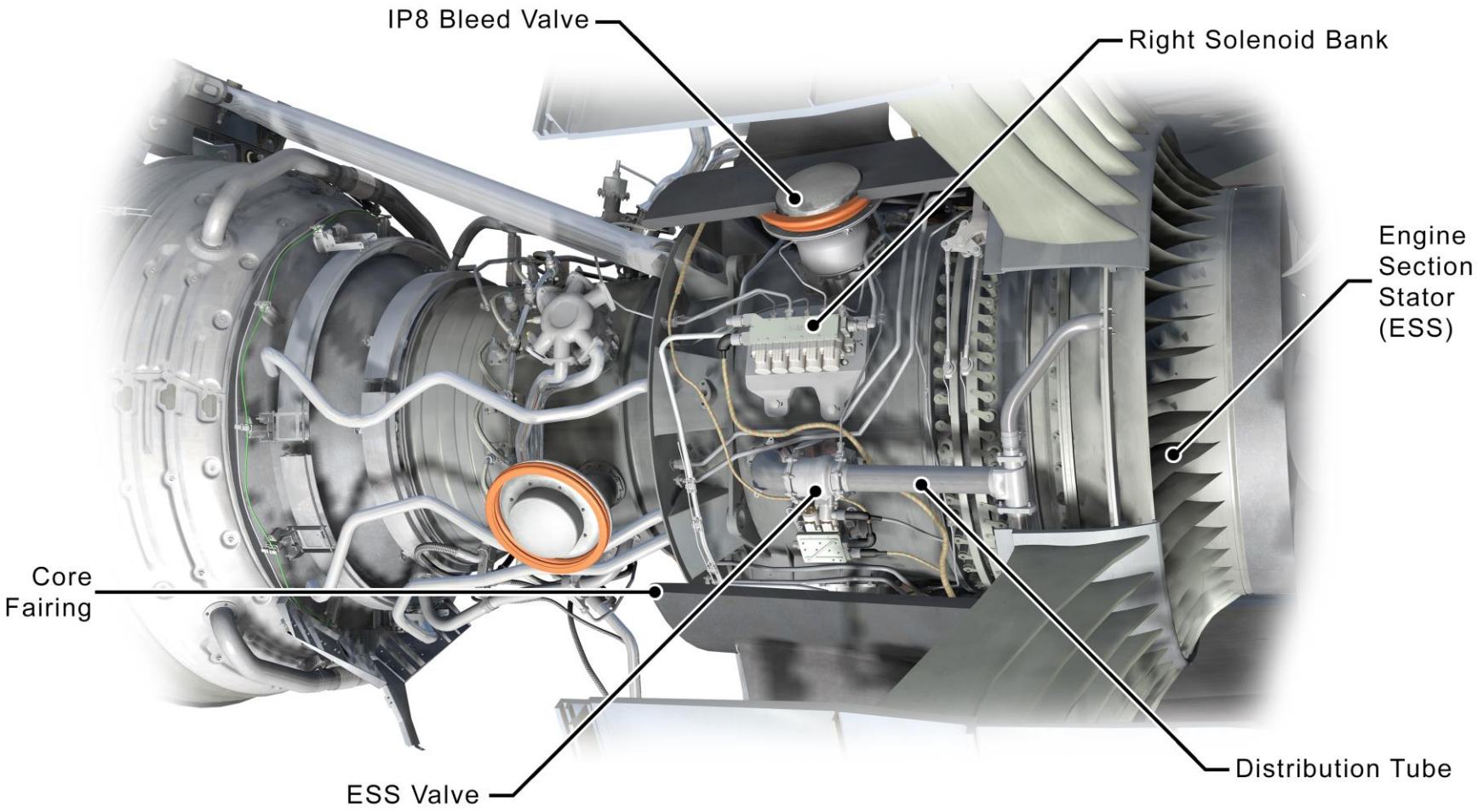

T1000 TEN_LBM_M12_205_01P

ENGINE ANTI-ICE - CORE ANTI-ICE SYSTEM

© Rolls-Royce plc 2018. Use or disclosure is subject to the legend on the Notice to Holder page

Engine Anti-Ice – Engine Inlet Anti-Ice System

Purpose

To prevent the build up of ice on the inlet cowl leading edge.

System Overview

The Engine Anti-Icing System consists of the following units:

- The Common Core System (CCS).
- Engine Anti-Ice Valve Controller.
- Engine Anti-Ice Valve Controller Air Cooler.
- Core Engine Anti-Ice Valve.
- Fan Engine Anti-Ice Valve.
- Flight Deck Controls.

General Description

The Engine Anti-Ice (EAI) Systems are identical for both engines. HP3 air is supplied to the inlet cowl leading edge via two butterfly type valves, a Core Engine Anti-Ice Valve and a Fan Engine Anti-Ice Valve. After heating the leading edge the air is vented overboard via an outlet on the left side of the air inlet cowl.

Common Core System (CCS)

The Primary Ice Detection System (PIDS) function within the CCR cabinets provides the controlling function for the operation of the anti-ice valves. Within the CCS is the Common Computing Resource (CCR). Core Engine Anti-Ice Valve operation is broadcast over the CDN via a Remote Data Concentrator (RDC) to the relevant engine Main Engine Data Concentrator (MEDC). Feedback to the MEDC is via two Engine Anti-Ice Pressure Sensors mounted each side of the Fan Engine Anti-Ice Valve.

Engine Anti-Ice Valve Controller

The EAI controller is an electro-pneumatic device that controls the Core EAI Valve. A torque motor within the controller receives a signal from the MEDC to move it to the open or closed position using cooled air supplied by the Engine Anti-Ice Valve Controller Air Cooler (CAC). There is also a filter in the valve pneumatic control supply.

Engine Anti-Ice Valve Controller Air Cooler

The Engine Anti-Ice Valve Controller Air Cooler decreases the temperature of the HP3 air supplied from the engine for use by the EAI Valve Controller.

Core Engine Anti-Ice Valve

The 3-inch butterfly-type Core Engine Anti-Ice Valve is located at the 12 o'clock position on the Intermediate Case (module 33) and regulates the volume of HP3 air into the engine inlet cowl leading edge (via the Fan Engine Anti-Ice Valve) and is controlled by the controller via the MEDC and PIDS. The Core Engine Anti-Ice Valve can be locked in either the CLOSED or the MID-LOCK OPEN position.

Fan Engine Anti-Ice Valve

The 2.5-inch butterfly-type Fan Engine Anti-Ice Valve regulates the pressure and is operated by a pneumatic signal upstream and downstream of the valve. The Fan Engine Anti-Ice Valve can be locked in the MID-LOCK OPEN position.

Flight Deck Controls

A three position switch on the overhead panel controls the operation of the Anti-Ice System. AUTO allows operation when ice is detected by the aircraft ice detection system. OFF and ON switch positions are for manual operation.

© Rolls-Royce plc 2018. Use or disclosure is subject to the legend on the Notice to Holder page

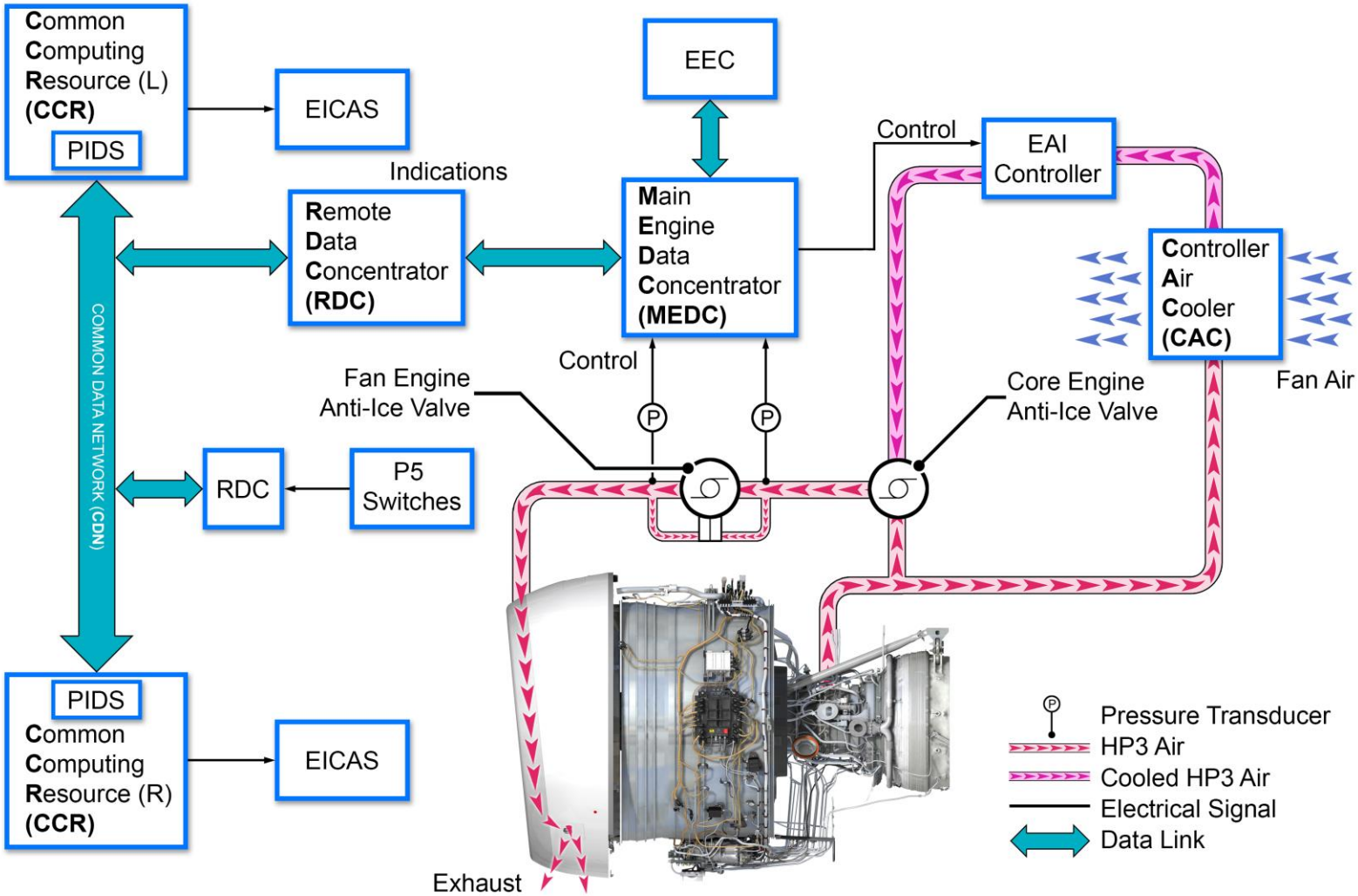

T1000 TEN_LBM_M12_206_01P

ENGINE ANTI-ICE - ENGINE INLET ANTI-ICE SYSTEM

© Rolls-Royce plc 2018. Use or disclosure is subject to the legend on the Notice to Holder page

Maintenance Practices

Core Engine Anti-Ice Valve Deactivation and Activation

The following is a brief description of these tasks. Refer to the AMM for the full description.

Core Engine Anti-Ice Valve Locked Closed

AMM Task B787-A-30-00-00-06C-721B-A

WARNING: DO ALL OF THE SPECIFIED TASKS IN THE CORRECT SEQUENCE TO OPEN THE THRUST REVERSER. IF YOU DO NOT OBEY THIS INSTRUCTION, INJURIES TO PERSONNEL AND EQUIPMENT CAN OCCUR

1. Prepare the aircraft I.A.W. the AMM.
2. De-activate the Thrust Reverser (AMM TASK B787-A-R78-31-00-20H-510B-A).
3. Open the Fan Cowl Doors (AMM TASK B787-A-R71-11-04-00B-540-A-A).
4. Open the left Thrust Reverser half (AMM TASK B787-A-R78-31-00-20B-540A-A).
5. Open the relevant circuit breakers.
6. Loosen and remove the locking pin from the stowed position.

Note: Longest end protrudes from the valve in the stowed position.

7. Turn the manual valve wrench to the closed position as marked on the valve.
8. Hold the manual valve wrench in the closed position and put the locking pin into the locked closed position such that the longest end protrudes from the valve.

Note: Do not invert the locking pin.

9. Tighten the locking pin to the torque values in the AMM.
10. Set the related EAI switch on the P5 overhead panel to OFF.
11. Disconnect, stow and secure the electrical connector and harness from the Engine Anti-Ice Valve Controller.

Core Engine Anti-Ice Valve Activation

AMM Task B787-A-30-00-00-06C-521B-A

1. Repeat Steps 1-5 of the Locked Closed procedure.
2. Loosen the locking pin and remove from the locked closed position.
3. Make sure the manual valve wrench is able to move freely and that it comes to rest in the CLOSED position. This is the normal position.
4. Put the locking pin into the stowed position ensuring that the longest end protrudes from the valve.
5. Tighten and torque load to the values in the AMM.
6. Remove any protection covers from the Engine Anti-Ice Valve Controller connector and harness and re-connect to the controller.
7. Close the left Thrust Reverser half (AMM TASK B787-A-R78-31-00-20B-740A-A).
8. Close the Fan Cowl Doors (AMM TASK B787-A-R71-11-04-00B-740-A-A).
9. Activate the Thrust Reverser (AMM TASK B787-A-R78-31-00-20G-730B-A).
10. Close the relevant circuit breakers.
11. Remove all warning tags.

© Rolls-Royce plc 2018. Use or disclosure is subject to the legend on the Notice to Holder page

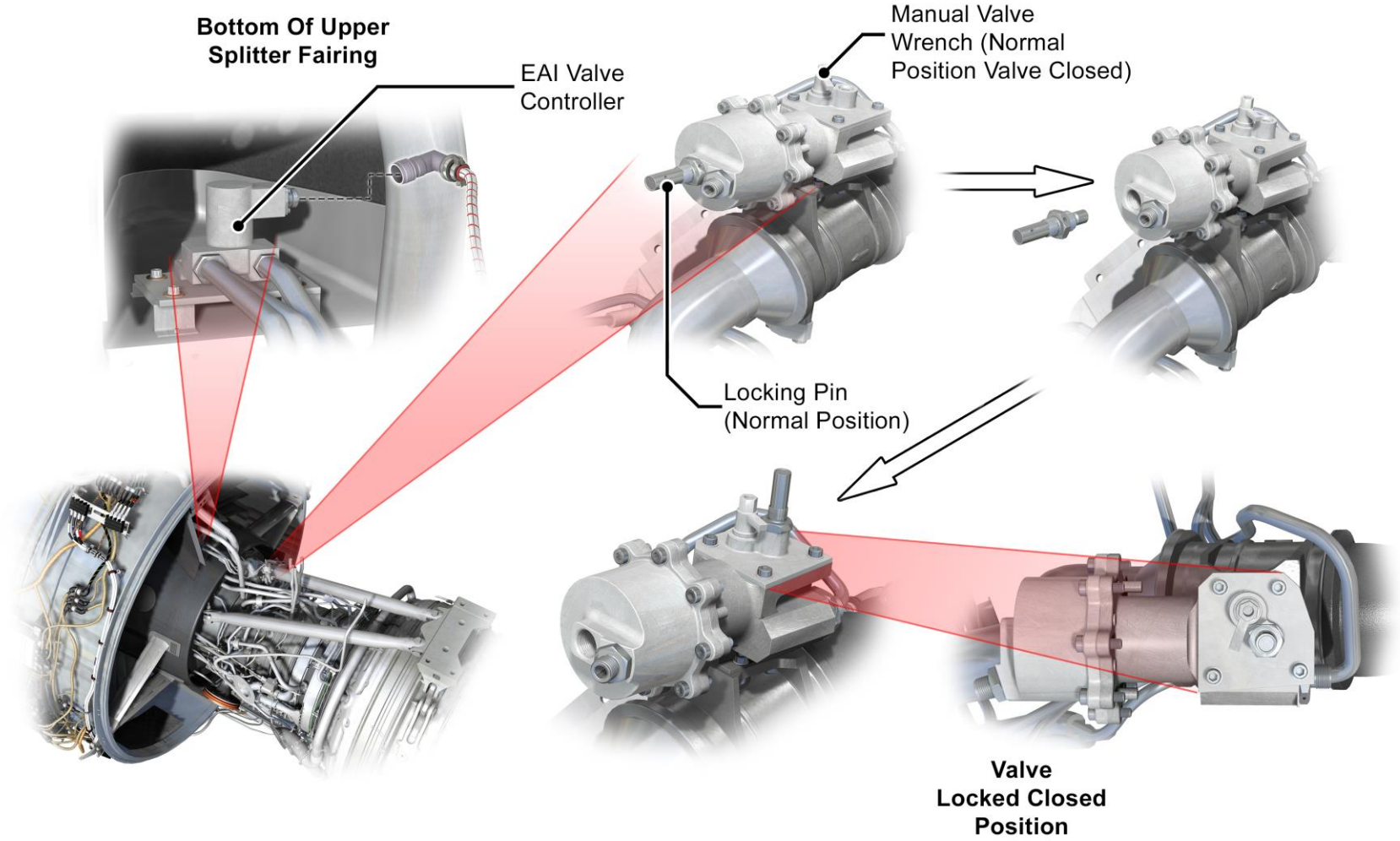

T1000 TEN_LBM_M12_207_01P

CORE ENGINE ANTI-ICE VALVE DEACTIVATION /ACTIVATION – CLOSED POSITION

© Rolls-Royce plc 2018. Use or disclosure is subject to the legend on the Notice to Holder page

Maintenance Practices

Core Engine Anti-Ice Valve Deactivation and Activation – Mid Lock Position

The following is a brief description of these tasks. Refer to the AMM for the full description.

Core Engine Anti-Ice Valve Mid-Lock Position

AMM Task B787-A-30-00-00-01C-721B-A

1. Prepare the aircraft I.A.W the AMM.
2. De-activate the Thrust Reverser (AMM TASK B787-A-R78-31-00-20H-510B-A).
3. Open the Fan Cowl Doors (AMM TASK B787-A-R71-11-04-00B-540-A-A).
4. Open the left Thrust Reverser half (AMM TASK B787-A-R78-31-00-20B-540A-A).
5. Open the relevant circuit breakers.
6. Loosen and remove the locking pin from the stowed position.

Note: The longest end protrudes from the valve in the stowed position.

7. Turn the manual valve wrench to the MID position.
8. Whilst holding the manual valve wrench in the MID position invert the locking pin and re-fit into its original location such that the shortest end protrudes from the valve.
9. Tighten the locking pin to the torque values provided by the AMM.
10. Release the manual valve wrench to its locked MID position.
11. Disconnect, stow and secure the electrical connector and harness from the Engine Anti-Ice Valve Controller.

Core Engine Anti-Ice Valve Activation

AMM Task B787-A-30-00-00-01C-521B-A

1. Repeat Steps 1-5 of the Mid Lock procedure.
2. Loosen the locking pin and remove from the valve.
3. Rotate the locking pin and install into the valve such that the longest end protrudes from the valve.
4. Tighten and torque load to the values in the AMM.
5. Ensure the manual valve wrench moves freely and that it comes to rest in the CLOSED position.
6. Remove any protection covers from the Engine Anti-Ice Valve Controller connector and harness and re-connect to the controller.
7. Close the left Thrust Reverser half (AMM TASK B787-A-R78-31-00-20B-740A-A).
8. Close the Fan Cowl Doors (AMM TASK B787-A-R71-11-04-00B-740-A-A).
9. Activate the Thrust Reverser (AMM TASK B787-A-R78-31-00-20G-730B-A).
10. Close the relevant circuit breakers.
11. Remove all warning tags.

© Rolls-Royce plc 2018. Use or disclosure is subject to the legend on the Notice to Holder page

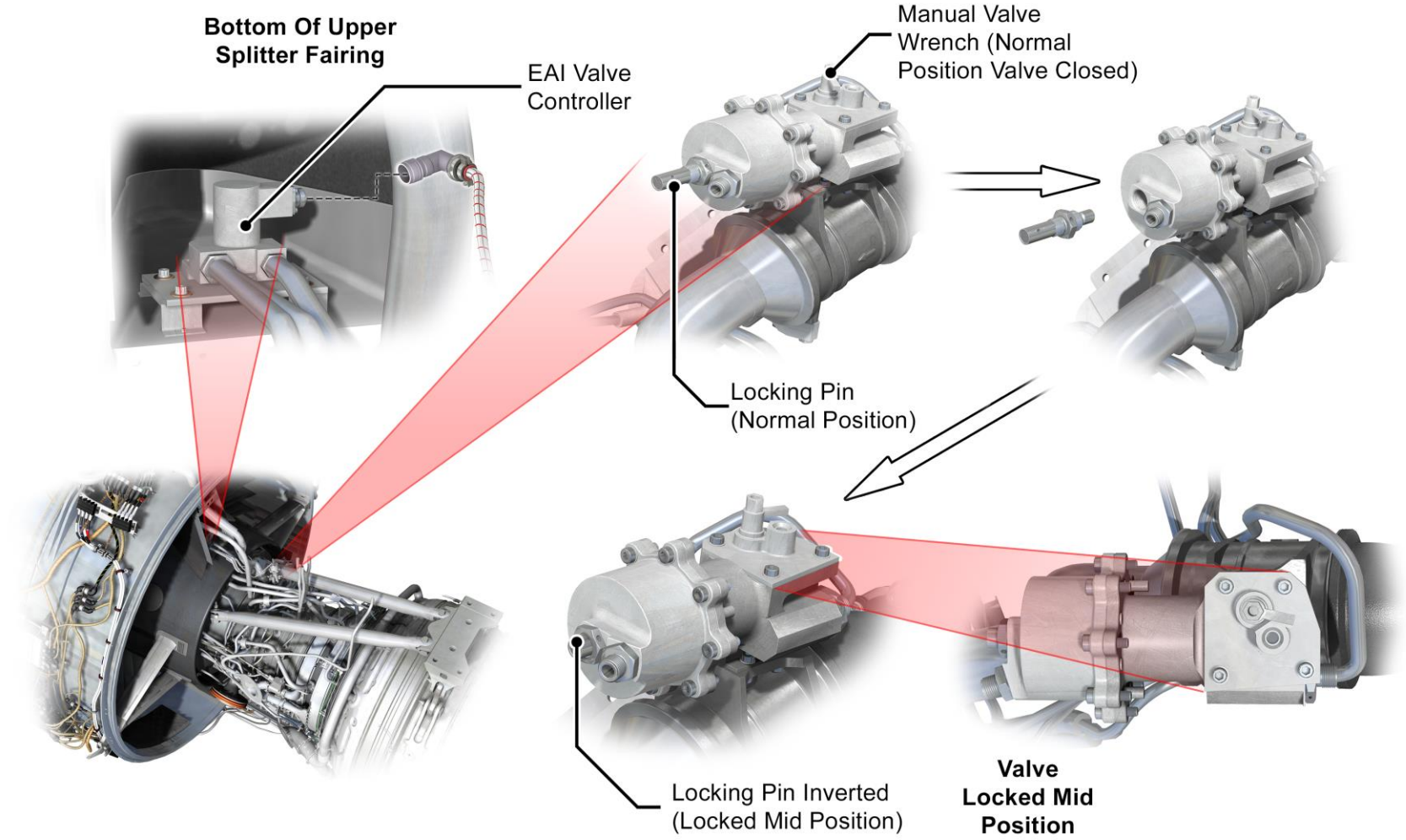

T1000 TEN_LBM_M12_208_01P

CORE ENGINE ANTI-ICE VALVE DEACTIVATION /ACTIVATION – MID LOCKED POSITION

© Rolls-Royce plc 2018. Use or disclosure is subject to the legend on the Notice to Holder page

Maintenance Practices

Fan Engine Anti-Ice Valve Deactivation and Activation – Mid Lock Position

The following is a brief description of these tasks. Refer to the AMM for the full description.

Fan Engine Anti-Ice Valve Deactivation - Mid-Lock Position

AMM Task B787-A-30-00-00-02C-721B-A

1. Prepare the aircraft I.A.W the AMM.
2. De-activate the Thrust Reverser (AMM TASK B787-A-R78-31-00-20H-510B-A).
3. Open the Fan Cowl Doors (AMM TASK B787-A-R71-11-04-00B-540-A-A).
4. Open the left Thrust Reverser half (AMM TASK B787-A-R78-31-00-20B-540A-A).
5. Open the relevant circuit breakers.
6. Turn the Fan Engine Anti-Ice Valve lock to the MID position.

Note: When in the MID position the lock will align with the hole for the locking pin.

7. Hold the lock in the MID position applying 11.3 Nm (100 in lb) to do so.
8. Loosen and remove the locking pin from the stowed position.
9. Install the locking pin through the valve lock and into the valve body, tightening to the torque values in the AMM.

Fan Engine Anti-Ice Valve Activation - Open Position

AMM Task B787-A-30-00-00-02C-521B-A

1. Repeat Steps 1-5 of the Mid Lock procedure.
2. Loosen the locking pin and remove from the valve lock.
3. Rotate valve lock counterclockwise to the OPEN (normal) position.
4. Apply 11.3 Nm (100 in lb) to hold the lock in the normal position.
5. Install the locking pin into the stowed position.
6. Remove any protection covers from the Engine Anti-Ice Valve Controller connector and harness and re-connect to the controller.
7. Close the left Thrust Reverser half (AMM TASK B787-A-R78-31-00-20B-740A-A).
8. Close the Fan Cowl Doors (AMM TASK B787-A-R71-11-04-00B-740-A-A).
9. Activate the Thrust Reverser (AMM TASK B787-A-R78-31-00-20G-730B-A).
10. Close the relevant circuit breakers.
11. Remove all warning tags.

© Rolls-Royce plc 2018. Use or disclosure is subject to the legend on the Notice to Holder page

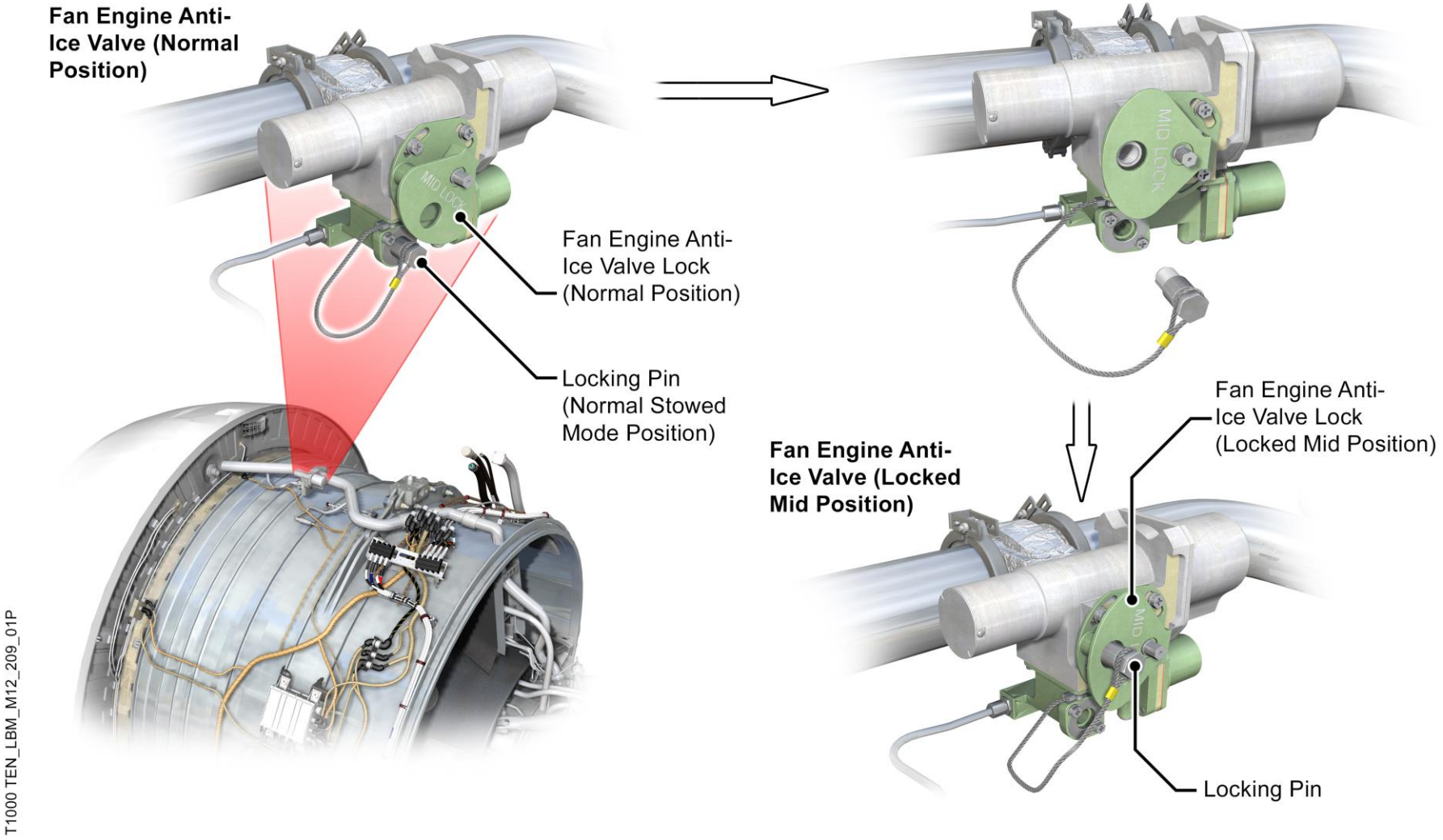

FAN ENGINE ANTI-ICE VALVE DEACTIVATION /ACTIVATION – MID LOCKED POSITION

© Rolls-Royce plc 2018. Use or disclosure is subject to the legend on the Notice to Holder page

On Board Maintenance – Ground or Initiated Tests

Introduction

The Initiated tests provide a means by which the maintenance personnel can conduct Engine related tests in a safe and controlled manner. The tests are called up to be carried out as and when directed by the relevant AMM or FIM procedure.

Test Structure

The Central Maintenance Computing Function (CMCF) will generate screens to guide the operator though in the following test steps:

- Test Set-Up (indicate to the operator any necessary warnings, switch selections and instructions required to carry out the test in a safe manner).
- Test In-Progress (Indicates that the test is currently being carried out (operating) – a STOP TEST option is available if required at this point).
- Test Close-Up (switch selections and instructions required to return the system to its original condition).
- Fault Reporting (indicates Passed or Failed condition).

Below is an indication of the P20/T20 Probe Heater, AMM Task B787-A-R71-00-00-24B-300B-A and ESS Anti-ice System, AMM Task B787-A-R71-00-00-35B-300B-A Ground Tests together with an explanation of the test capabilities.

Note: See the Troubleshooting section for more details on access and conducting Ground Tests.

© Rolls-Royce plc 2018. Use or disclosure is subject to the legend on the Notice to Holder page

Test Name
EEC SYSTEM TEST CHANNEL A
EEC SYSTEM TEST CHANNEL B
ESS ANTI-ICE SYSTEM
FUEL METERING VALVE SYSTEM CHANNEL A
FUEL METERING VALVE SYSTEM CHANNEL B
FUEL RETURN TO TANK VALVE
HANDLING BLEED VALVE SYSTEMS CHANNEL A
HARNESS CHANNEL A
HARNESS CHANNEL B
IGNITION SYSTEM CHANNEL A
IGNITION SYSTEM CHANNEL B
MODULATED AIR SYSTEM
P20/T20 PROBE HEATER
OIL BYPASS VALVE SYSTEM CHANNEL A
OIL BYPASS VALVE SYSTEM CHANNEL B
OIL DEBRIS MONITORING SYSTEM RESET CHANNEL A
OIL DEBRIS MONITORING SYSTEM RESET CHANNEL B
SECONDARY AIR SYSTEM
TURBINE CASE COOLING ACTUATION SYSTEM
THRUST REVERSER INTERLOCK SOLENOID
VFSG THERMAL BYPASS VALVE
VARIABLE STATOR VANE SYSTEM CHANNEL A
VARIABLE STATOR VANE SYSTEM CHANNEL B
VFSG AOHE AIR CONTROL VALVE SYSTEM CHANNEL A
VFSG AOHE AIR CONTROL VALVE SYSTEM CHANNEL B

This test is performed when the engine is at Ground Idle. The test is provided to allow the operator to verify the operation of the ESS Anti-Ice Valve Actuation System.

The P20/T20 Probe test allows the operator to verify the operation Probe Heat circuit. During the test the ECC commands the probe heater to be energised; as such the probe will get warm. The EEC will monitor the test and display any fault codes as necessary.

T1000 TEN_LBM_M12_210_01P

© Rolls-Royce plc 2018. Use or disclosure is subject to the legend on the Notice to Holder page

Flight Deck Effects

Introduction

Below is an indication of the associated Flight Deck Effect (FDE) massages with this section (Ice Protection System) together with the message type (level), an explanation of its meaning, dispatch restrictions (if any) and expected actions taken by flight or ground crew.

Note: This is for your guidance only. Due to the nature of the aircraft and engine continual development these may change and Rolls-Royce cannot guarantee that they are still current and fully accurate. As such, always refer to the appropriate AMM procedure for reference.

© Rolls-Royce plc 2018. Use or disclosure is subject to the legend on the Notice to Holder page

Message	Type	Dispatch	Meaning
ENG CONTROL L (R)	Status	Do Not Dispatch	The left (right) engine, Engine Electronic Controller (EEC) is in a 'No Dispatch' configuration. EEC may be operating with a limited set of Engine control parameters and may not be capable of controlling all aspects of the engine.
ENG EEC C1 L (R)	Status	Short Time Dispatch	The Engine control system is in a time limited dispatch condition and is operating with reduced redundancy.
ENG CORE ANTI-ICE L (R)	Advisory	Short Term Dispatch	The Engine Section Stator (ESS) Anti-Ice Valve (AIV) is failed closed, has a loss of both solenoid drives, has a loss of Channel B or ESS AIV is deactivated.
ENG ESS A/I VALVE CLOSED L (R)	Status	Short Term Dispatch	The Engine Section Stator (ESS) Anti-Ice Valve (AIV) is failed closed, has a loss of both solenoid drives, has a loss of Channel B or ESS AIV is deactivated.
ENG ESS A/I VALVE OPEN L (R)	Status	Short Term Dispatch	The Engine Section Stator (ESS) Anti-Ice Valve (AIV) is failed in open position.

© Rolls-Royce plc 2018. Use or disclosure is subject to the legend on the Notice to Holder page

Ice Protection System Reference Wiring Diagrams

Introduction

Below is a wiring schematic of the associated units connected to the Ice Protection System. This is only a representation of the actual connectors but all plugs and connectors are indicated with the reference identifiers. This should be used for reference only and not be used as a definitive document. For a more detailed explanation (pins and sockets for troubleshooting purposes etc) and for further details, then always refer to the actual wiring diagrams as given within the AMM or FIM electronic documentation.

© Rolls-Royce plc 2018. Use or disclosure is subject to the legend on the Notice to Holder page

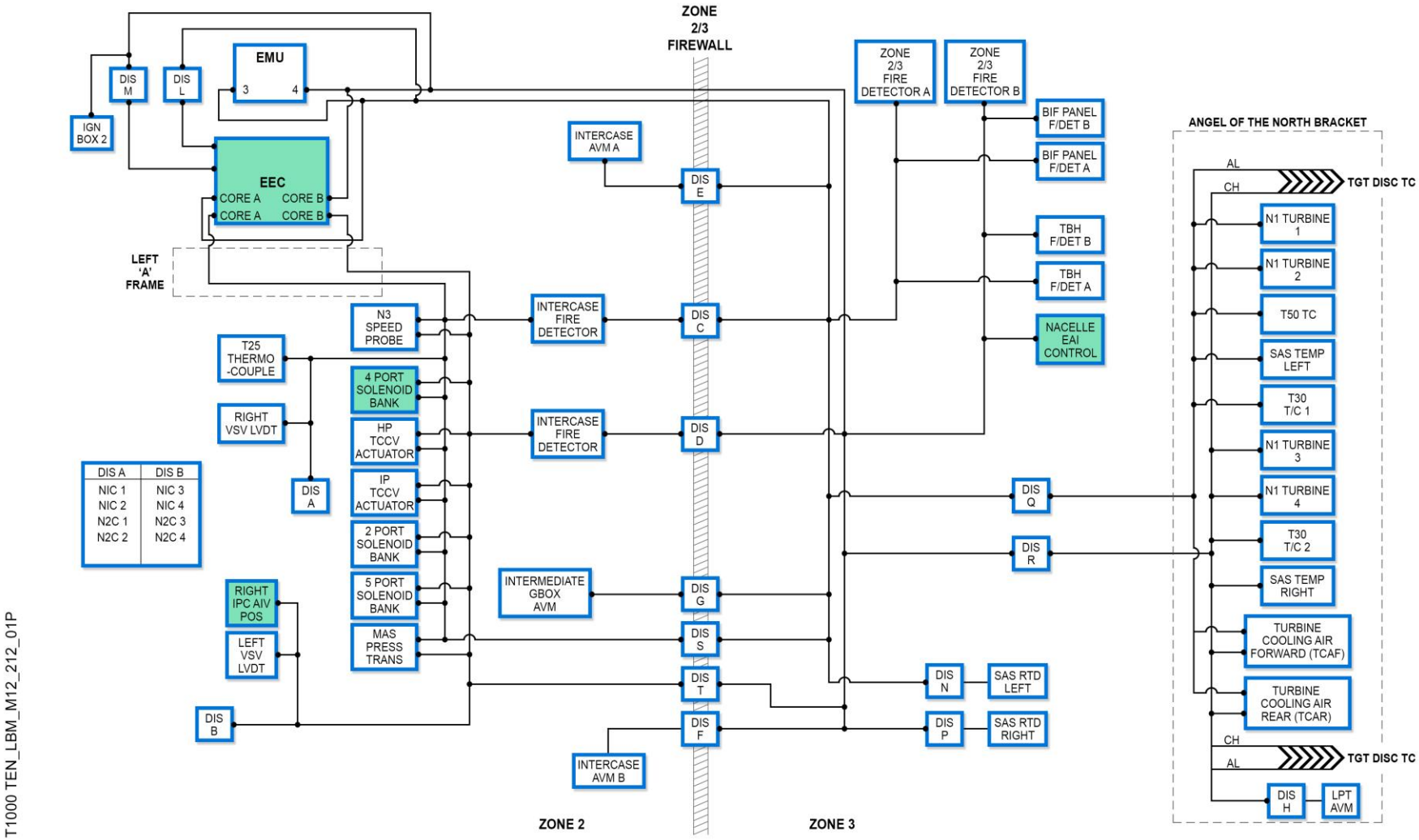

DIS A	DIS B
NIC 1	NIC 3
NIC 2	NIC 4
N2C 1	N2C 3
N2C 2	N2C 4

ICE PROTECTION SYSTEM WIRING DIAGRAM

© Rolls-Royce plc 2018. Use or disclosure is subject to the legend on the Notice to Holder page

Ice Protection System Reference Wiring Diagrams

Introduction

Below is a wiring schematic of the associated units connected to the Ice Protection System. This is only a representation of the actual connectors but all plugs and connectors are indicated with the reference identifiers. This should be used for reference only and not be used as a definitive document. For a more detailed explanation (pins and sockets for troubleshooting purposes etc) and for further details, then always refer to the actual wiring diagrams as given within the AMM or FIM electronic documentation.

© Rolls-Royce plc 2018. Use or disclosure is subject to the legend on the Notice to Holder page

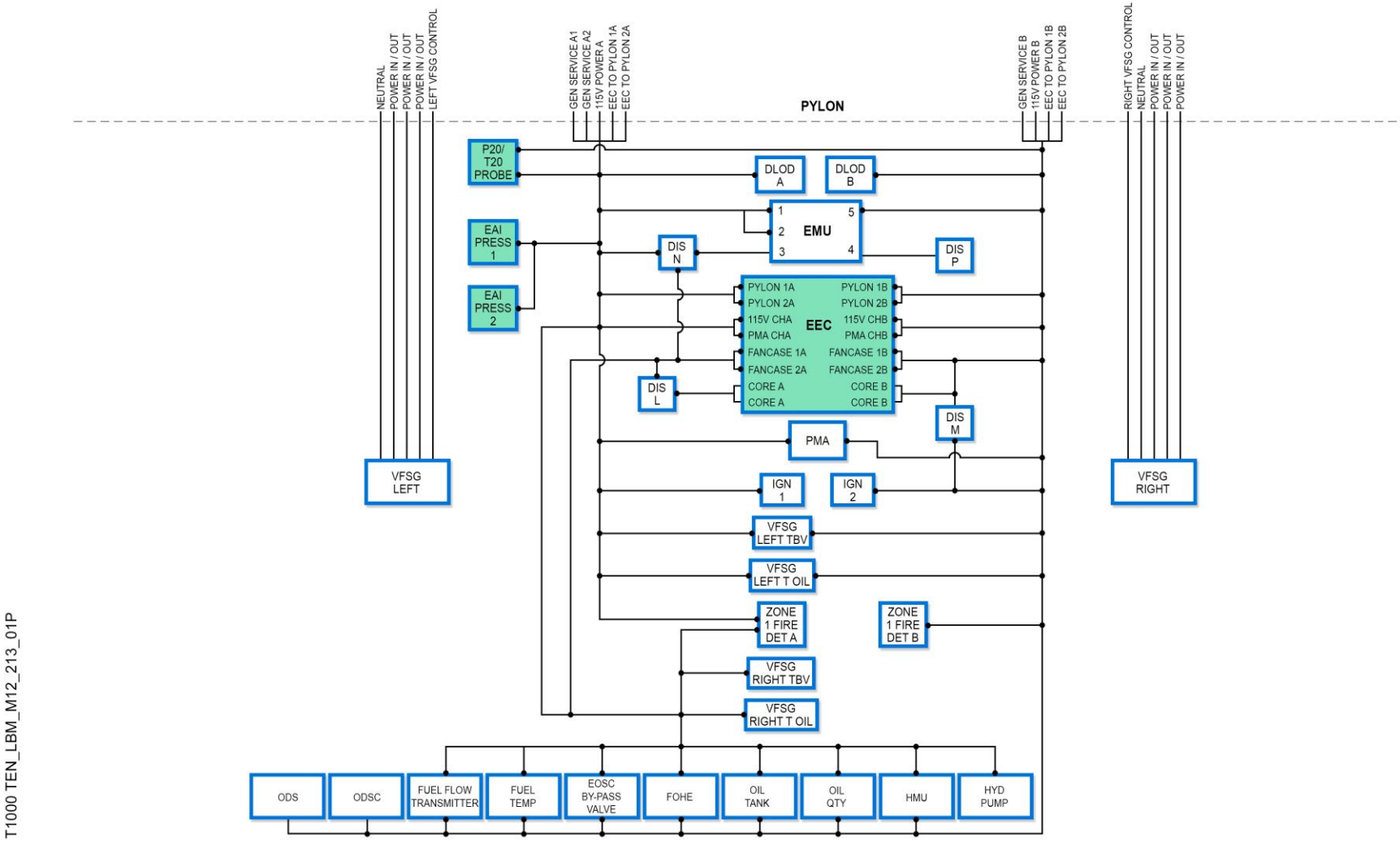

ICE PROTECTION SYSTEM WIRING DIAGRAM

© Rolls-Royce plc 2018. Use or disclosure is subject to the legend on the Notice to Holder page

END OF SECTION

Section 13 - Starting & Ignition

ATA Chapters Covered:

74, 77 and 80

© Rolls-Royce plc 2018. Use or disclosure is subject to the legend on the Notice to Holders page

Main Engine Starting System Overview

Purpose

To start the engine on the ground or in flight following an in-flight shutdown.

Description

The Rolls-Royce Trent 1000 features an all-electric starting system which utilises the following components:

Electronic Engine Control System (EECS)

The EEC is responsible for sequencing the engine start system to ensure VFSG torque commands; fuel, ignition and Start Switch hold-in voltage achieve successful starting on the ground or in-flight.

The EEC communicates with the CMSC and the aircraft via the CDN.

Common Motor Start Controller (CMSC)

Each VFSG is connected to a single CMSC (there are 2 CMSCs per engine). All four CMSCs are located in the aft EE Bay and each have the dual role of controlling a VFSG during starting and being a motor controller to control aircraft system related electric motors at all other times.

Variable Frequency Starter Generator (VFSG)

The VFSG has the dual role of acting as a starter motor during engine starting and an electrical generator when the engine is running.

For all ground starts, two VFSGs are used whereas all in-flight starts use one. The engine can be started on the ground using one VFSG however; the start time will still be within limits but will be extended. The VFSGs provide the torque to drive the External Gearbox, which in turn drives the Intermediate Gearbox via a driveshaft and the IP System during all starts, maintenance motoring, cooling and flushing procedures.

Fuel System

The EEC controls the supply of fuel to the Fuel Spray Nozzles via the PRSOV and FMV in the Hydro-Mechanical Unit (HMU).

Ignition System

The engine has a dual ignition system, powered by the 28V DC supplies from the aircraft. The EEC controls the selection of the ignition supplies.

Flight Deck Controls

There are two switches on the flight deck that influence the start cycle:

The Start Switch – The two start switches are located on the P5 Overhead panel. They have two positions NORM and START. Each switch is magnetically latched when moved to the START position. The EEC releases the switches back to the NORM position via the CDN when the engine is at idle.

Fuel Control Switch – The two Fuel Control Switches are located on the Control Stand. Each switch is hardwired to the EEC and the stop coil of the PRSOV. The EEC also receives switch position via the CDN and can be reset by moving the switch from CUTOFF to RUN and back to CUTOFF.

Both switches will also supply 115V AC to the EEC during engine start or during maintenance.

© Rolls-Royce plc 2018. Use or disclosure is subject to the legend on the Notice to Holders page

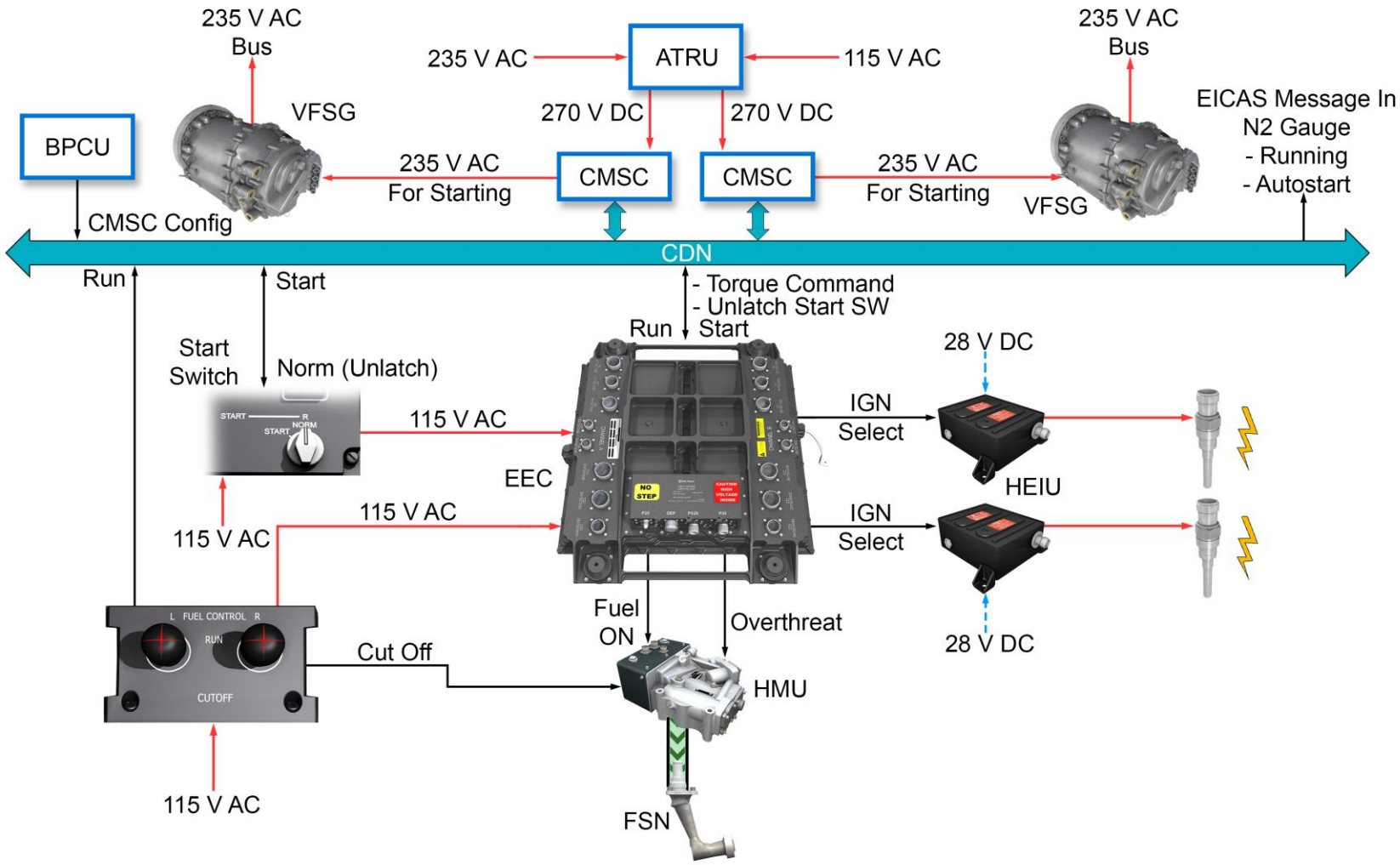

T1000 TEN_LBM_M13_214_01P

MAIN ENGINE STARTING SYSTEM OVERVIEW

© Rolls-Royce plc 2018. Use or disclosure is subject to the legend on the Notice to Holders page

Aircraft Electrical Power for Starting and Motoring

Introduction

To start the main engines or to allow a motoring task the VFSGs require Electrical Power to be supplied from the Aircraft,

Purpose

To supply electrical power to the VFSGs for starting or motoring.

Location

Electrical power for starting and motoring can be supplied from any of the following locations:

- Two Auxiliary Start Generators (ASG) located on the Auxiliary Power Unit (APU), (Usual source).
- Three 115V AC external power sources (ground only) of which two is a minimum.
- The Ram Air Turbine (RAT) (Flight Only).
- The other engine if it is running.

Description

The usual power supply to the VFSGs for starting and motoring is via the APU ASGs. If the APU is inoperative, then three 90KVA electrical ground carts are required. If this is not possible a minimum of two will be needed.

Electrical power from either of the above sources is regulated and supplied to the Left and Right 235V AC Bus. For starting and motoring the VFSGs are supplied with 235V AC via a dedicated CMSC located within the P700 and P800 panels in the Aft EE Bay.

Two Bus Power Control Units (BPCU) monitor, control, select and load manage the aircraft power system and are in contact with the CMSCs via the Common Data Network. In this way the CMSCs can, as stated, supply the VFSGs with the initial 235V AC power required for turning the VFSGs to rotate the engine during main engine start. This initial voltage is lower than normal to provide a low torque value on initiation of the start sequence to protect both the VFSG drive and engine external gearbox.

Once the engine is running at idle the BPCU will re-configure the CMSC to relinquish control of the VFSG and control other electrical motors on the aircraft.

With the engine running at idle each engines left VFSG will supply 235V AC power to the P100 panel whilst each engines right VFSG will supply 235V AC to the P200 panels. These panels then distribute electrical power to the left and right 235 V AC Bus for use by the aircraft.

© Rolls-Royce plc 2018. Use or disclosure is subject to the legend on the Notice to Holders page

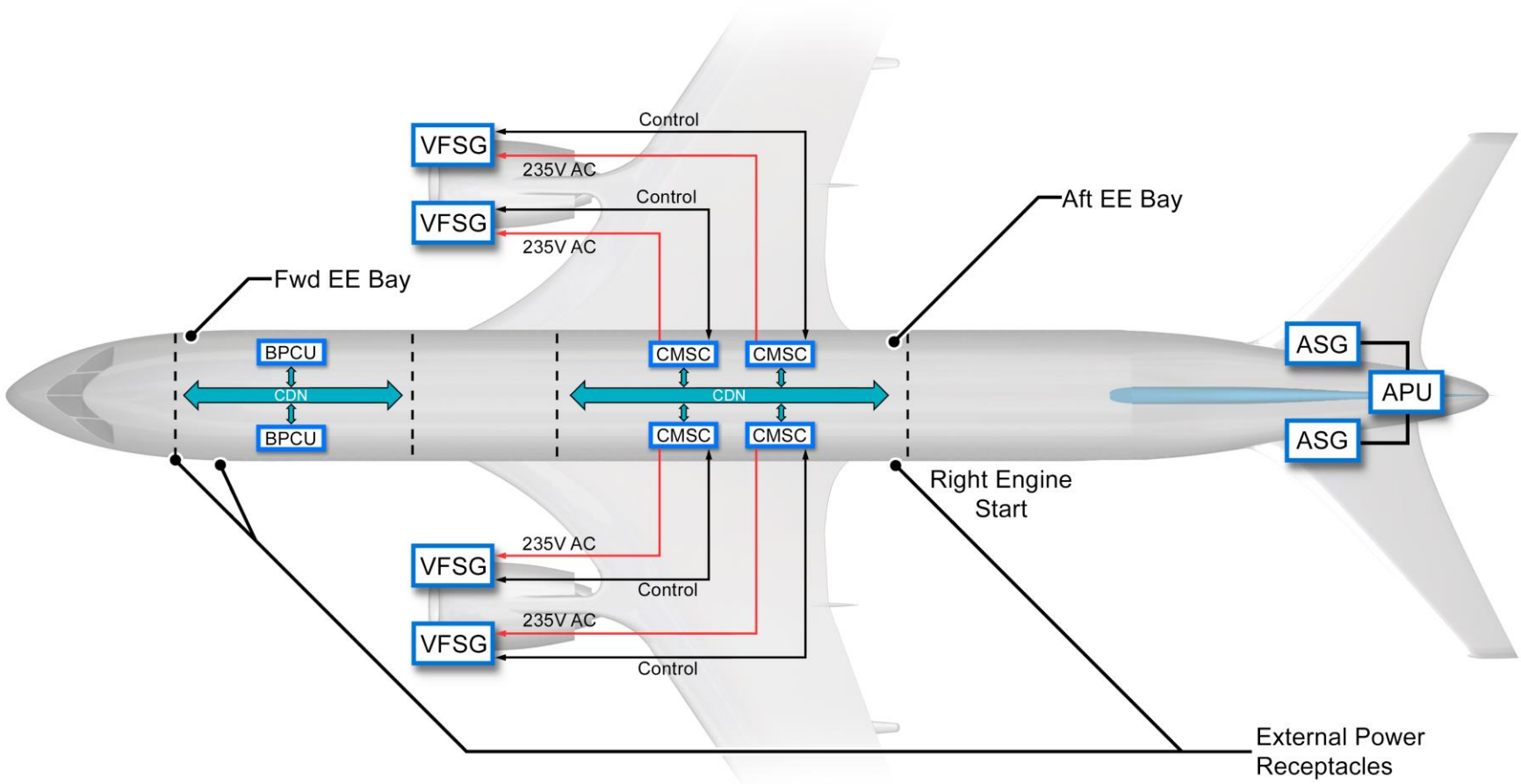

T1000 TEN_LBM_M13_215_02P

AIRCRAFT ELECTRICAL POWER FOR STARTING

© Rolls-Royce plc 2018. Use or disclosure is subject to the legend on the Notice to Holders page

Starting System - Flight Deck Controls

There are two switches used for starting the engine, one on the P5 overhead panel and the other on the P8 panel behind the throttle levers on the Control Stand.

Start Switch – P5 Panel

There is a separate, start switch for each engine. The switch is a rotary two position switch annotated NORM and START.

Setting the switch to the START position has the following effects:

- A latching circuit powered by 28V DC from the Capt Instrument Bus holds the switch in the START position.
- The CMSC configures itself for main engine start.
- The CMSC commands the VFSGs to apply 100% torque (300 lbs ft torque) to the engine.
- Aircraft 115V AC power is applied to the EEC.

When the EEC confirms that the engine has started the EEC will release the 28V DC latching circuit and the switch will move to the NORM position. This action will have the following effects:

- The CMSC configures itself for its role as an aircraft motor controller.
- The CMSC and EEC are signalled to de-activate the VFSGs from starting mode.

Fuel Control Switch – P8 Panel

There is a separate fuel control switch for each engine to the rear of the throttles on the Centre Control Stand. The switch is a two-position switch labelled RUN and CUT OFF.

Setting the Fuel Control Switch to the RUN position has the following effects:

- Aircraft 115V AC power is applied to the EEC.
- The STOP Coil, ‘A’, in the PRSOV of the HMU is de-energised to give the EEC the authority to OPEN the PRSOV at the correct point in the start sequence.
- The EEC makes 28V DC available to the ignition system by closing the igniter power control relays in the exciter.

For the EEC to open the PRSOV to admit fuel to the FSNs and energise the igniter(s) the following conditions must be met:

- IP speed (N2) is greater than 18%.
- HP speed (N3) is greater than 5%.
- TGT is less than 250°C.

The EEC applies a 3 second delay to the igniter selection during the first start attempt of a start sequence. The delay allows the fuel manifold to be primed with fuel before the igniters are turned on.

Setting the Fuel Control Switch to the CUTOFF position has the following effects:

- The STOP Coil, ‘A’, in the PRSOV of the HMU is energised shutting off the fuel supply to the engine.
- An EEC reset is initiated.
- Igniter power control relays are opened removing 28V DC from the ignition system.

© Rolls-Royce plc 2018. Use or disclosure is subject to the legend on the Notice to Holders page

T1000 TEN_LBM_M13_216_01P

STARTING SYSTEM – FLIGHT DECK CONTROLS

© Rolls-Royce plc 2018. Use or disclosure is subject to the legend on the Notice to Holders page

Start System Schematic

Ground Start

The starting system provides automatic sequencing and control of the CMSCs, VFSGs, PRSOV and igniters in response to command signals from the flight deck.

Before the EEC will attempt an 'On Ground Start' the following conditions must be satisfied:

- The aircraft is on the ground.
- Engine speed is below Idle.
- The Fuel Control Switch is set to RUN.
- The Start Switch is at START.

Start Attempts

The Trent 1000 can only be started on the ground by an auto start. There is a limit of two starts per attempt and a 20 second cooling / flushing cycle will be completed in between. If the engine does not start successfully in two attempts the EEC will abort the start sequence until the EEC is reset.

VFSG Motoring

At 6% N2 the EEC begins its power up checks and until these are completed the CMSC will command the VFSGs to deliver 100% torque.

On completion of its power up checks the EEC signals the CMSC to modulate the torque output of the VFSGs from 20% to 100%, for optimum starting. 100% equates to 300 lb ft.

Fuel On Conditions

The EECS commands the PRSOV open when the following conditions apply:

- IP Speed (N2) is greater than 18%.
- HP speed (N3) is greater than 5%.
- TGT less than 250 deg C.
- Fuel Control Switch is in the RUN position.

Ignition On Conditions

Energising of the ignition circuit is usually selected on at the same conditions as the fuel but is delayed for the first start attempt by 3 seconds, to allow the fuel manifold to be primed with fuel prior to ignition selection. A single igniter will be energised for the first start. If the first start fails all subsequent start attempts will use both ignition circuits until the igniter ground test has been carried out.

Engine Light Up

The EEC detects engine light up when:

- Rate of change of TGT is greater than 2.0 deg C / second, or
- TGT is greater than 300 deg C.

VFSG Cut Out

The VFSG mechanically drives the IP shaft until the EEC confirms N2 speed is at or above idle. At this point the EEC commands the VFSG start function and ignition circuit(s) off.

Start Complete

On completion of a start sequence (engine confirmed to be at or above idle):

- The EEC broadcasts a signal over the CDN to release the start switch and move it from START to NORM.
- The AUTOSTART message above the N2 gauge is replaced by a RUNNING message.
- The CMSCs reconfigure to control the aircraft motors as required.

© Rolls-Royce plc 2018. Use or disclosure is subject to the legend on the Notice to Holders page

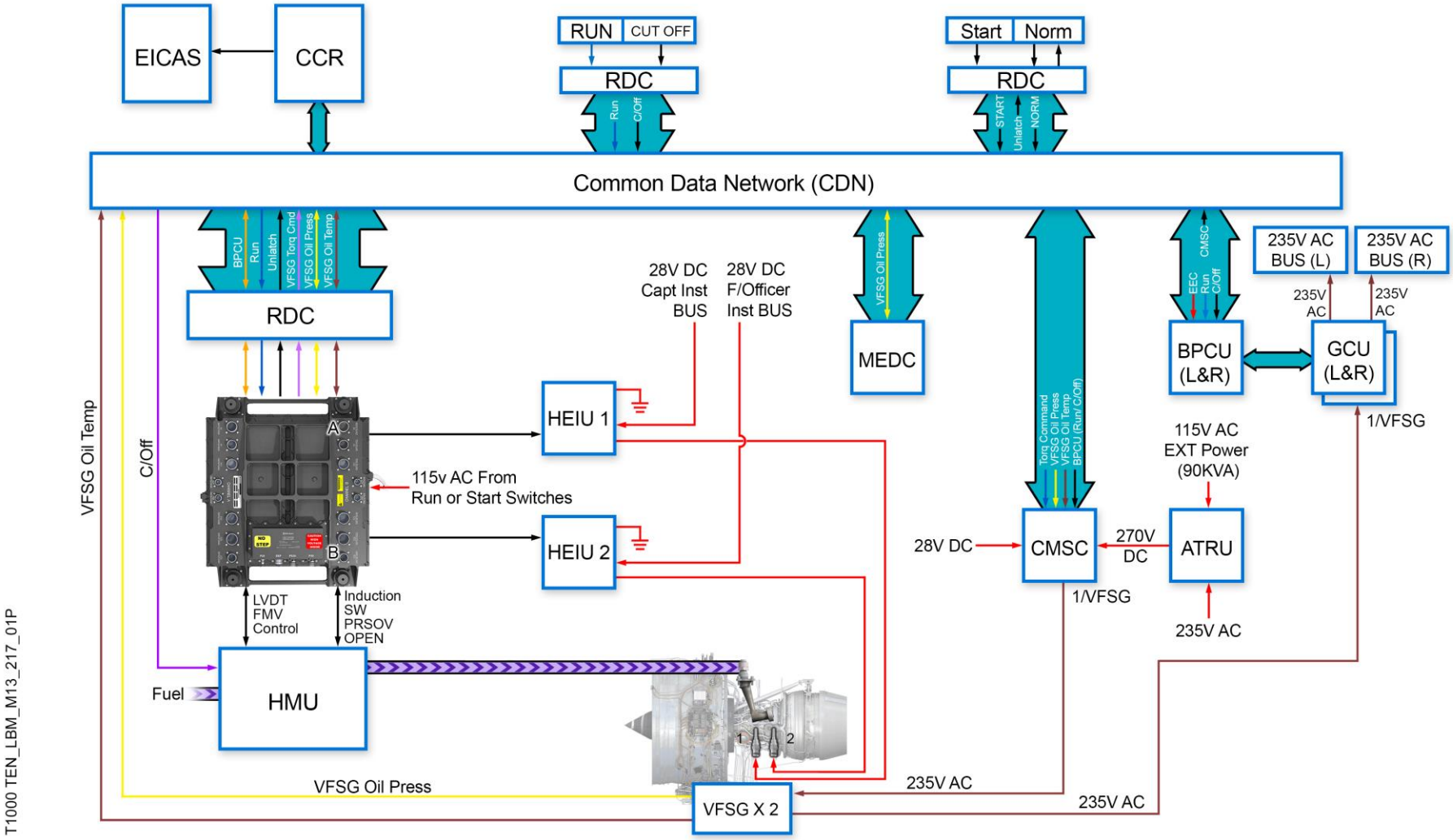

GROUND START

© Rolls-Royce plc 2018. Use or disclosure is subject to the legend on the Notice to Holders page

Start System Schematic

In Flight VFSG Assisted Start

There are two methods of starting the engine in-flight, these being a Starter Assisted Start and a Windmill Start.

Start Attempts

The Trent 1000 can only be started by an auto start and there is no limit to the number of start attempts in flight. For all in-flight starter assisted starts only one VFSG is used for which there is no duty cycle limit.

The EEC will initiate an 'In Flight Starter Assisted Start' when the following conditions apply:

- The aircraft is in flight
- N2 speed is below idle
- The Fuel Control Switch is set to the 'RUN' position
- The Start Switch is set to the 'START' position

VFSG Motoring

The EEC will provide a VFSG torque command to the CMSC via the CDN if powered by the PMA or Aircraft Electrical Power.

If the PMA is inoperative then the CMSC will command 100% torque to the VFSG using the Electrical Power Generation and Starting System (EPGSS) to apply the 235 V AC power required for rotation providing the Start Switch is in the START position.

Once the EEC becomes powered and initialised and the Start Switch is in the START position the EEC will transmit the VFSG torque command to the CMSC.

Fuel ON Conditions

For in-flight starter assisted starts fuel is commanded ON when:

- N2 is greater than the computed airspeed, and
- N3 is greater than 5%, and
- TGT is less than 200 deg C, and
- Fuel Control Switch is in the RUN position.

Ignition ON Conditions

Both ignition systems are commanded ON for all in-flight starts when Fuel ON conditions are met.

Engine Light Up

Engine Light Up is detected for all in-flight starter assisted starts when:

- Rate of change of P30 is greater than 0.2 psi / second, or
- Rate of change of TGT is greater than 2 deg C / second and N3 is less than 50%.

VFSG and Igniter OFF

The EEC commands the starter and igniters to OFF when the EEC detects the engine is at or above idle.

Start Complete

The engine achieving idle speed indicates a successful in-flight starter assisted start. The EEC also commands the VFSG torque to zero and releases the Start Switch to the NORM position.

© Rolls-Royce plc 2018. Use or disclosure is subject to the legend on the Notice to Holders page

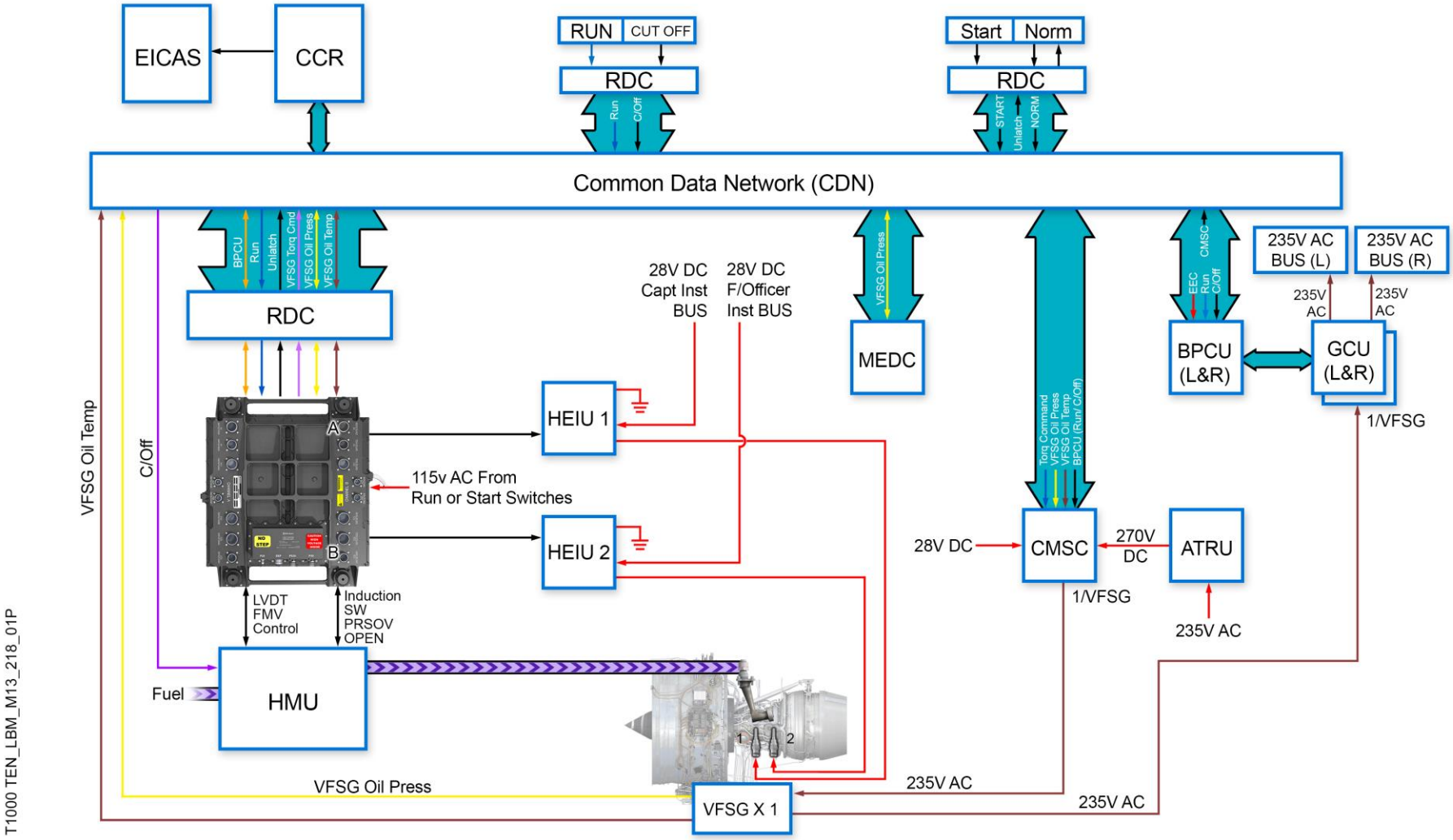

IN FLIGHT START STARTER ASSISTED START

© Rolls-Royce plc 2018. Use or disclosure is subject to the legend on the Notice to Holders page

Engine Ignition System

Purpose

The ignition system supplies an electrical spark in the combustion chamber for ignition of the fuel / air mixture during engine start and to sustain combustion during periods of inclement weather.

Location

The two high-energy ignition units are located on brackets on the left side of the fan case below the EEC. Electrical power to the igniter units is via the aircraft 28V DC supply.

The igniter plugs locate through the combustion case at the 4 and 8 o'clock positions and are connected to the ignition units by a high-tension cable. Access is by opening the thrust reverser halves.

Description

Each engine has two ignition systems that can operate independently or together. Each system consists of an igniter unit, high-tension lead and an igniter plug. The ignition systems are numbered 1 and 2, with system 1 being the left igniter and system 2, being right igniter.

The low 28V DC power is supplied directly from the aircraft electrical system via the Captains Instrument BUS for igniter 1 and the First Officer Instrument BUS for igniter 2. Each ignition unit provides a minimum energy release at the igniter plug of 2.2 joules.

Electrical power is provided via electronic circuit breakers and is available to the ignition system when the Fuel Control Switch is in the "RUN" position. The EEC controlling function operates relays to control the power supply to each ignition system and has an internal voltage meter to detect any faults.

To prevent overheating of the system the cable and igniter are partially cooled using fan air. This cooling air is supplied to the section of the cable and the igniter nearest to the combustor area via a tube connected to the LP Turbine Case Cooling (TCC) Valve inlet duct. This allows fan air to be ducted to each igniter at all times. After cooling the igniter and lead the air exits from beneath shrouds clamped to the igniter, into the Fire Zone 3.

Ignition Selection

The EEC alternates the ignition system selection for each successive ground start attempt. This ensures no dormant faults exist. If the engine fails to light during its first start attempt a cooling / flushing cycle is performed before both igniters are selected for the second attempt. The table below explains this sequencing.

NOTE: The first channel in control may be either Channel A or Channel B

START NUMBER	EEC CHANNEL USED	IGNITION SYSTEM SELECTED
1	A (B)	1
2	B (A)	1
3	A (B)	2
4	B (A)	2
5	A (B)	1

Both igniters are selected for all in flight starts, auto relights, quick relights, surges and detection of inclement weather.

© Rolls-Royce plc 2018. Use or disclosure is subject to the legend on the Notice to Holders page

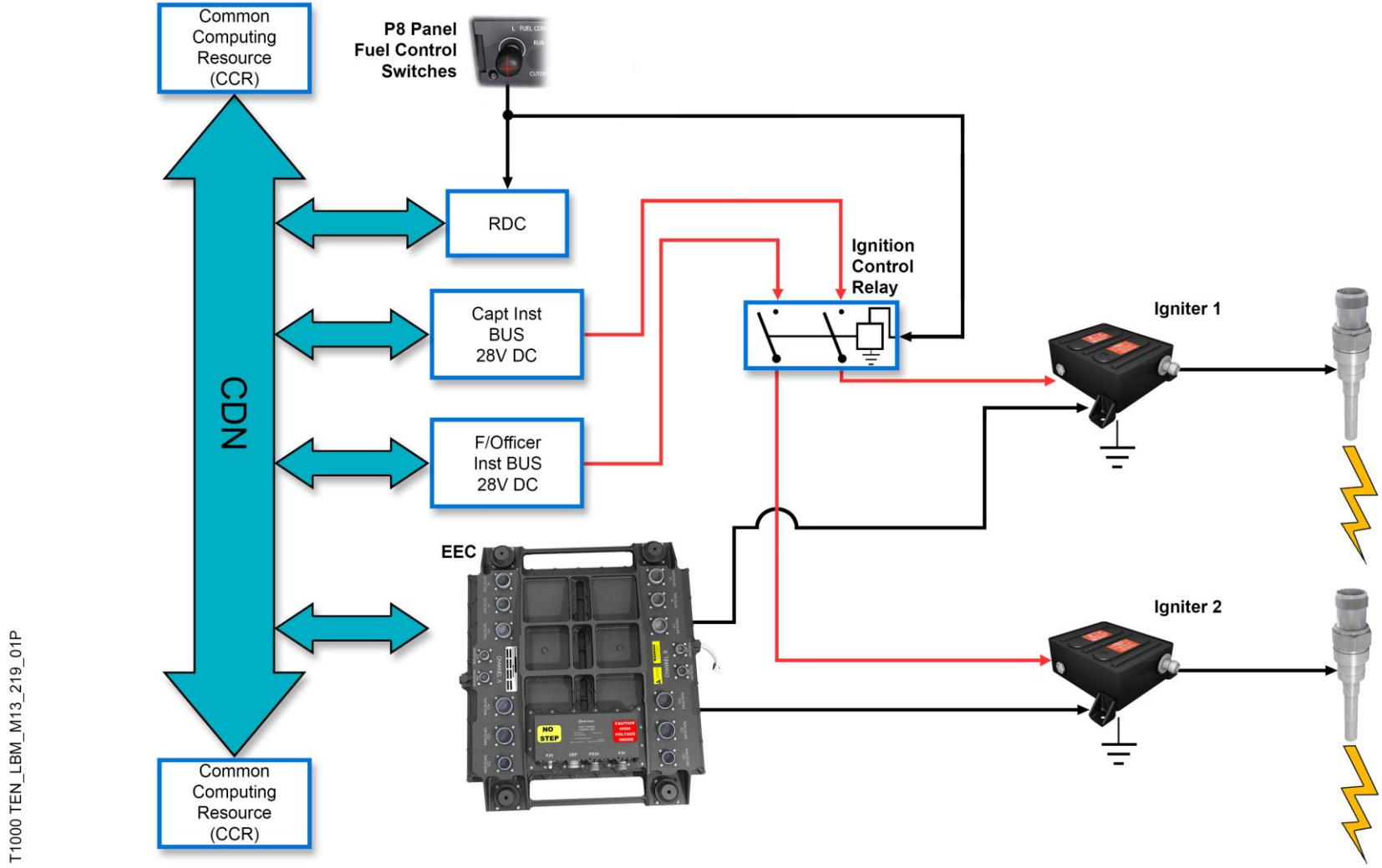

ENGINE IGNITION SYSTEM

© Rolls-Royce plc 2018. Use or disclosure is subject to the legend on the Notice to Holders page

Starting and Ignition Recovery

Description

Should the flame in the combustion chamber extinguish, there are a number of systems in place on the Trent 1000 that will help the engine to re-light the fuel and continue operation, or prevent the flameout occurring.

Re-light systems are described as the Auto-Relight and Quick Relight functions. Whereas the monitoring of P30 and T30 for flameout due to surge and inclement weather are the prevention functions.

Quick Relight

The Quick Relight enables the flight crew to relight the engine if the Fuel Control Switch is inadvertently moved to the CUT OFF position on the ground or in flight.

On ground Quick Relight is active when:

- Fuel Control Switch moved from RUN to CUTOFF and back to RUN within 40 seconds, and
- N2 is greater than 30%, and
- N3 is greater than 50%.

In-flight QWR is active when:

- Fuel Control Switch moved from RUN to CUTOFF and back to RUN within 40 seconds, and
- N2 is greater than 6%, and
- N3 is greater than 10%.

The EEC to open the PRSOV in the HMU, both ignition systems are commanded ON and AUTOSTART is displayed on EICAS.

Auto-Relight

The Auto relight function protects against flame out on the ground or in-flight. This function is only enabled once the engine has completed a start procedure on the ground or in-flight.

If the EEC, by virtue of falling engine speeds, detects an engine flameout, then both the ignition systems are commanded ON and AUTORELIGHT is seen on EICAS.

If Auto Relight fails the EEC commands the PRSOV to close and turns the ignition systems OFF.

Auto Relight can be aborted when the Fuel Control switch is moved to OFF or the Fire handle is pulled.

Surge Protection.

During a surge event both ignition systems are energised as a function of P30 being too low for a given condition.

Inclement Weather Protection

The EEC includes a T30 based flameout protection mechanism to protect the engine from flameout in the event of excessive water ingestion. When this condition is detected, then both igniters are energised to prevent the engine from flaming out.

© Rolls-Royce plc 2018. Use or disclosure is subject to the legend on the Notice to Holders page

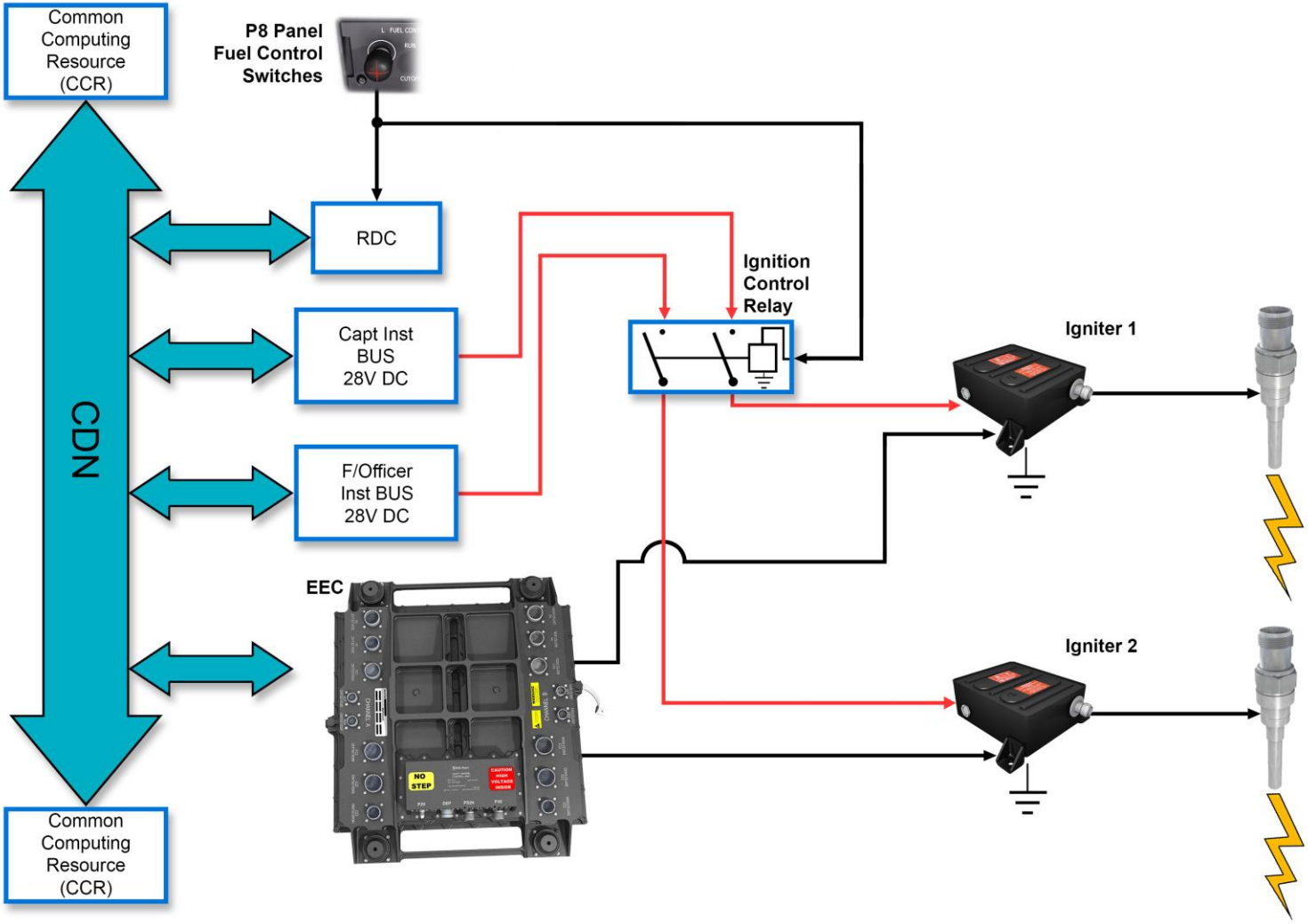

T1000 TEN_LBM_M13_219_01P

ENGINE IGNITION SYSTEM

© Rolls-Royce plc 2018. Use or disclosure is subject to the legend on the Notice to Holders page

Ignition System Components

The two ignition systems consist of the same units and can be energised or de-energised by either channel of the EEC.

Ignition Units

The two ignition units are identical but operate independently. Each ignition unit converts 28 volts DC power from the aircraft, to approximately 3.0 kilovolts via a capacitive discharge circuit. This high power output is transmitted to an igniter plug through the ignition distribution system.

Energy is stored in the unit and released from the plug at a minimum of 2.2 joules. The ignition system provides between 60-120 sparks per minute.

Ignition Leads

The ignition lead is routed from the ignition unit to the igniter plug and consists of:

- An inner wire conductor.
- An insulation cover.
- An outer conductor.
- Flexible tube.
- Wire cover.
- Cooling shroud.

The igniter lead routes electrical current from the ignition unit to the igniter plug. The outer wire conductor gives the current return routing from the igniter plug back to the ignition unit and connects to earth.

Within the centre of the outer electrode is an inner electrode that is isolated from the main igniter body, but is connected to the inner wire conductor of the ignition lead. The outer conductor of the ignition lead connects to the igniter plug outer electrode. The annulus between the inner and outer electrodes is filled with a semi-conductor material.

Due to the high temperatures encountered in the fire zone 3 the igniter lead is cooled by LP Compressor Bypass air supplied from the inlet of the LP TCC Valve.

A two part-cooling shroud is clamped around the upper body of the igniter plug to also cool the igniter and direct the cooling flow into zone 3.

Igniter Plug

The igniter plug is of the surface discharge type whose body is screwed into an adaptor on the combustion case. The end of the igniter slightly protrudes into the combustor to allow ignition of the fuel / air mixture.

When the ignition system is energised, the igniter lead transmits electrical current from the ignition unit to the igniter plug. The current flows through the inner wire to the igniter plug inner electrode contact into the centre electrode.

The semi-conductor ionises the air around the centre electrode and allows the current to flow to the outer electrode. This energy pulse gives a high-energy spark between the inner and outer electrodes. The current then flows back through the outer electrode, outer wire conductor of the lead to the case of the ignition unit.

© Rolls-Royce plc 2018. Use or disclosure is subject to the legend on the Notice to Holders page

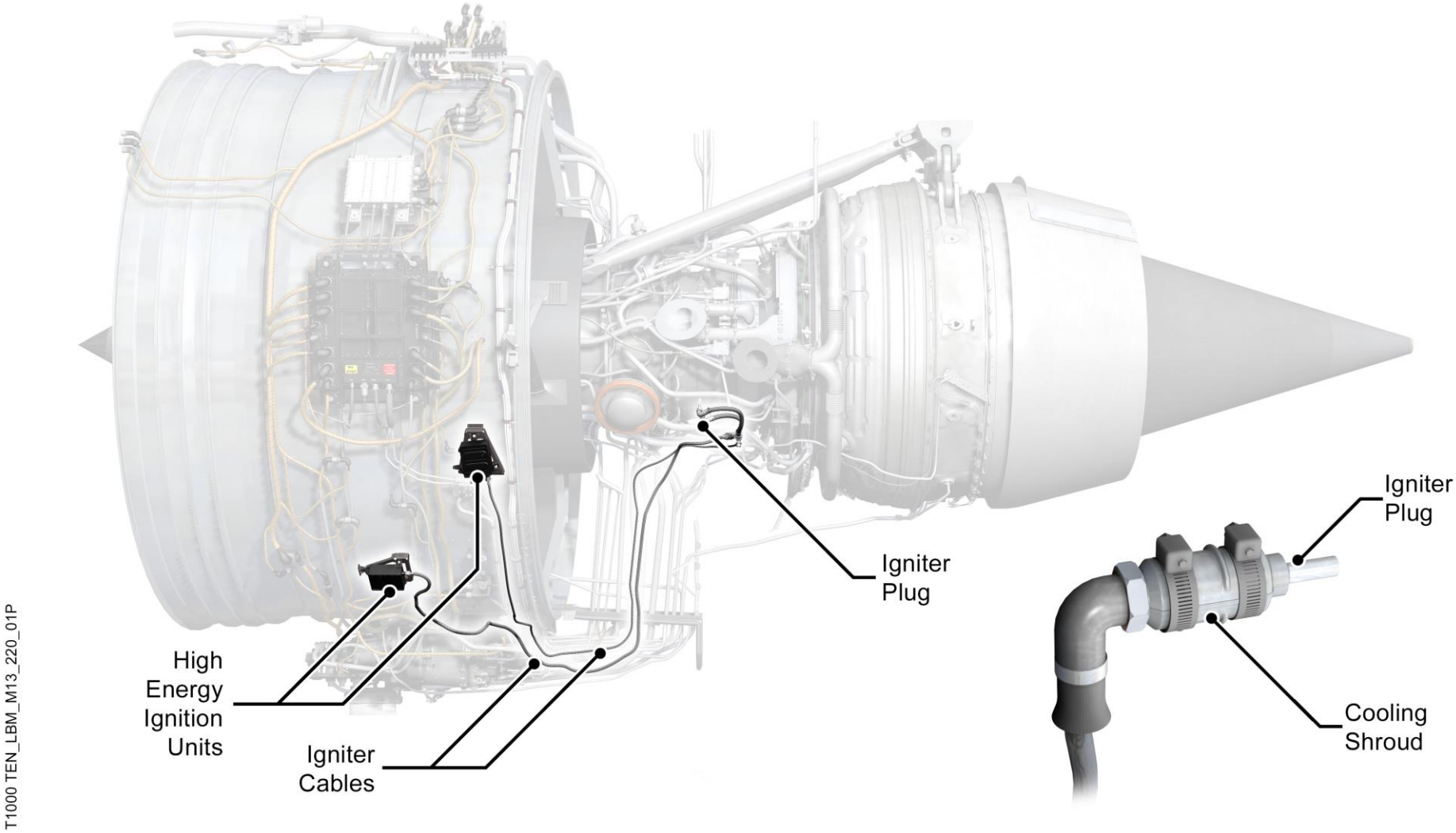

IGNITION SYSTEM COMPONENTS

© Rolls-Royce plc 2018. Use or disclosure is subject to the legend on the Notice to Holders page

Maintenance Practices.

Igniter plug Removal and Installation

The following is a brief description of these tasks. Refer to the AMM for the full description.

AMM Task B787-A-R74-21-12-00A-520A-A

WARNING: DO NOT TOUCH THE IGNITION COMPONENTS UNTIL THE RELEVANT CIRCUIT BREAKERS HAVE BEEN OPENED. THESE STEPS WILL RELEASE THE HIGH VOLTAGE FROM THE IGNITION EXCITER. IF YOU DO NOT OBEY THESE STEPS, INJURIES TO PERSONNEL CAN OCCUR.

1. Open the Fan Cowl Doors (AMM Task B787-A-R71-11-04-00B-540A-A).
2. Open the relevant Thrust Reverser C-duct (AMM Task B787-A-R78-31-00-20B-540A-A).
3. Disconnect the electrical input connector from the ignition box and fit blanks accordingly.

   CAUTION: - DO NOT USE PLIERS WITH METAL JAWS TO LOOSEN THE CONNECTORS. THE METAL JAWS WILL CAUSE DAMAGE TO THE CONNECTORS.

CAUTION: DO NOT BEND THE ELECTRICAL HARNESSES TOO MUCH WHEN YOU DISCONNECT AND CONNECT THE ELECTRICAL CONNECTORS. THIS CAN CAUSE ELECTRICAL CIRCUIT MALFUNCTIONS. IF YOU BEND THEM TOO MUCH, DAMAGE TOI THE HARNESSES CAN OCCUR.

4. Release the clamps around the igniter and remove the cooling shrouds.
5. Firmly hold the igniter lead and disconnect the igniter lead from the igniter plug.
6. Remove the igniter plug from the engine-using socket HU43915.

Igniter Plug Installation

AMM Task B787-A-R74-21-12-00A-520A-A

1. Apply high temperature anti-seize compound (Omat 4/62) to the threads of the igniter plug.
2. Put the igniter in position and install into the engine-using socket HU43915 and torque tighten to the value in the AMM.
3. Connect the lead to the igniter plug. Firmly hold the igniter lead whilst torque tightening to the value in the AMM.
4. Install the cooling shrouds ensuring the clamps do not cover the cooling holes.
5. Torque tighten the clamps to the value given in the AMM.
6. Connect the electrical input connector to the igniter box (AMM Task B787-A-R70-50-02-00A-730A-A).
7. Ensure the work area is clear of tools and equipment.
8. Close the Thrust Reverser C-ducts (AMM Task B787-A-R78-31-00-20B-740A-A).
9. Close the Fan Cowl Doors (AMM Task B787-A-R71-11-04-00B-740A-A).
10. Apply electrical power to the aircraft and carry out the relevant test I.A.W the AMM.

© Rolls-Royce plc 2018. Use or disclosure is subject to the legend on the Notice to Holders page

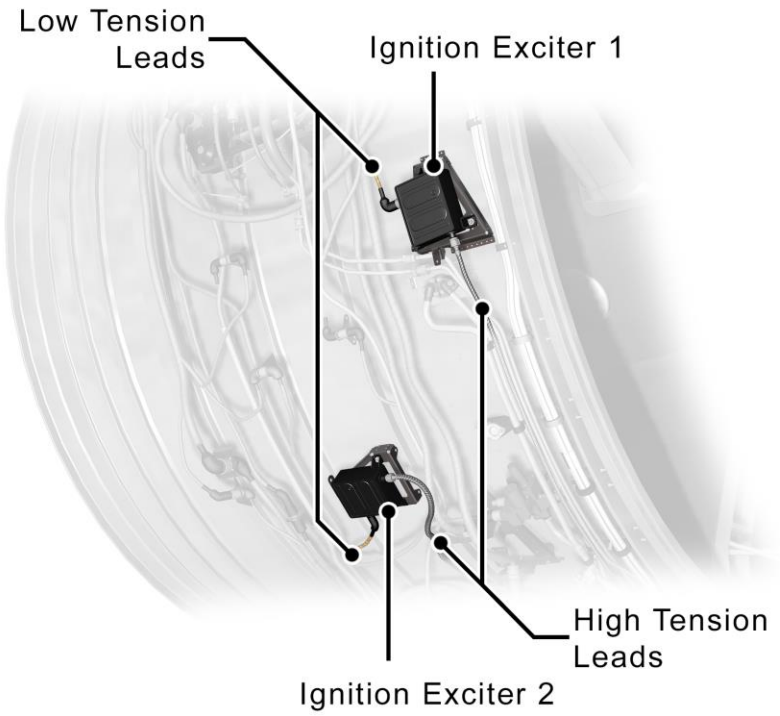

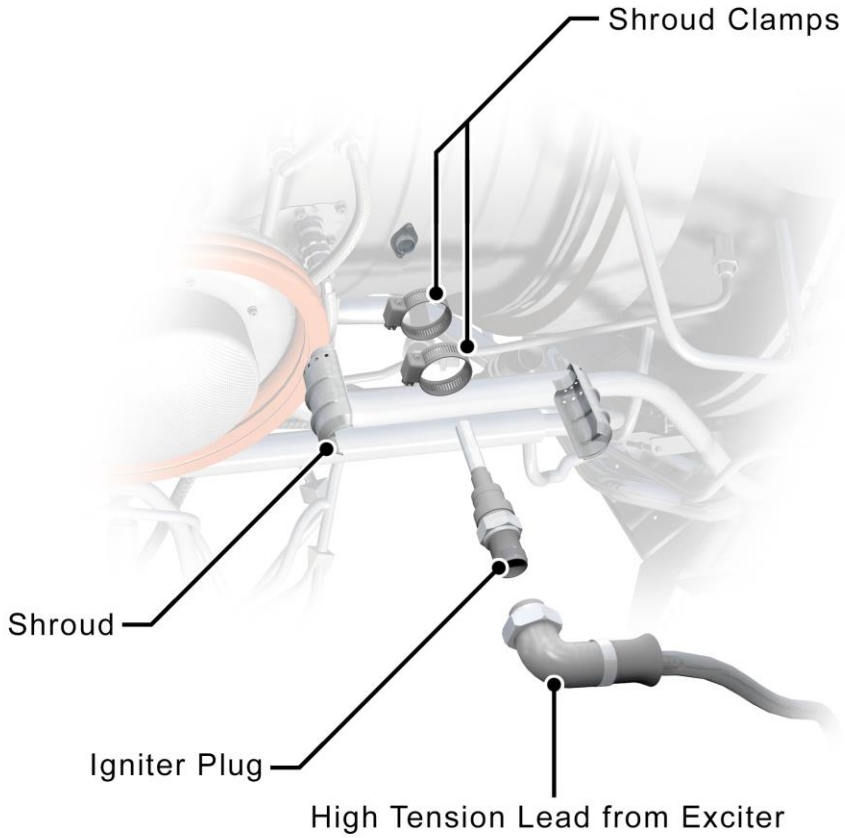

T1000 TEN_LBM_M13_221_01P

IGNITER PLUG REMOVAL AND INSTALLATION

© Rolls-Royce plc 2018. Use or disclosure is subject to the legend on the Notice to Holders page

Maintenance Practices.

Igniter Plug Inspection

The following is a brief description of these tasks. Refer to the AMM for the full description.

AMM TASK B787-A-R74-21-12-00A-280B-A

WARNING: BE CAREFUL WHEN YOU DO WORK ON THE ENGINE PARTS AFTER THE ENGINE IS STOPPED. THE ENGINE PARTS CAN STAY HOT FOR ALMOST ONE HOUR. DO NOT TOUCH HOT PARTS WITHOUT APPLICABLE GLOVES. HOT PARTS CAN CAUSE INJURIES TO PERSONNEL.

1. Remove the Igniter plug (AMM TASK B787-A-R74-21-12-00A-520A-A).
2. Visually inspect the igniter plug:
   a. Inspect the body, joints and insulation above the contact button for cracks. Reject if any found.
   b. Examine the outer shell for frettage.
   c. Examine the tip for erosion.
   d. Examine the contact button for pitting.
   e. Examine for corrosion.
   f. Examine the igniter body for pitting but be aware the body has a naturally rough surface when new.
   g. Examine the centre electrode. Reject the igniter plug if the centre electrode is missing and then Borescope the HP Turbine I.A.W the AMM TASK B787-A-R72-00-00-23B-280C-A.
   h. Examine the centre electrode and outer shell for cracks and missing pieces.

Note: All acceptance and reject criteria is in accordance with the AMM.

© Rolls-Royce plc 2018. Use or disclosure is subject to the legend on the Notice to Holders page

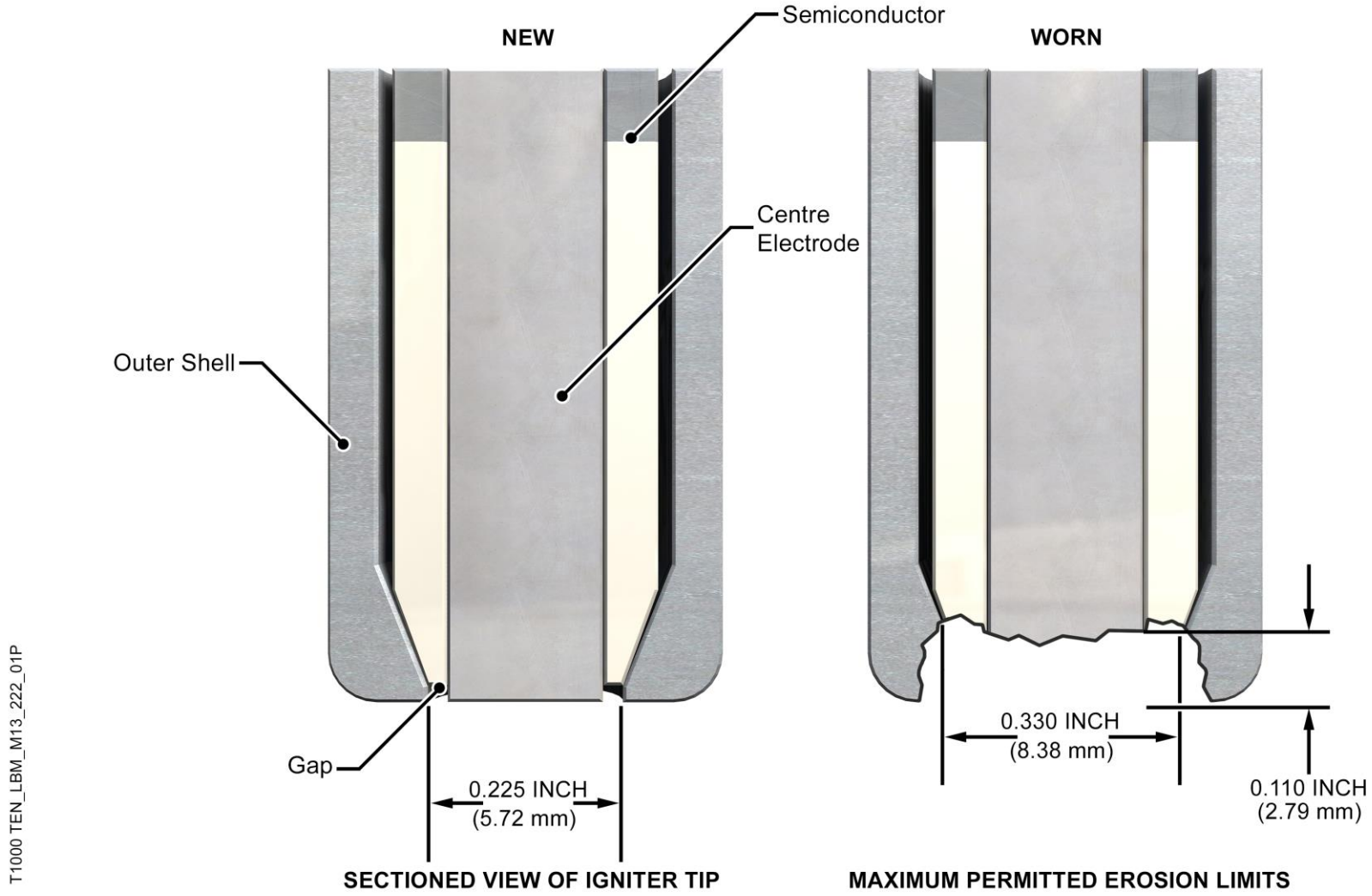

IGNITER PLUG INSPECTION

© Rolls-Royce plc 2018. Use or disclosure is subject to the legend on the Notice to Holders page

On Board Maintenance – Ground or Initiated Tests

Introduction

The Initiated tests provide a means by which the maintenance personnel can conduct Engine related tests in a safe and controlled manner. The test called up is to be carried out when directed by the relevant AMM of FIM procedure.

Test Structure

The Central Maintenance Computing Function (CMCF) will generate screens to guide the operator though in the following test steps:

- Test Set-Up (indicate to the operator any necessary warnings, switch selections and instructions required to carry out the test in a safe manor).
- Test In-Progress (Indicates that the test is currently being carried out (operating) – a STOP TEST option is available if required at this point).
- Test Close-Up (switch selections and instructions required to return the system to its original condition).
- Fault Reporting (indicates Passed or Failed condition).

Below is an indication of the Ignition System Test, AMM Task B787-A-R71-00-00-37B-300B-A, together with an explanation of the test capabilities.

Note. See the Troubleshooting section for more details on access and conducting Ground Tests.

© Rolls-Royce plc 2018. Use or disclosure is subject to the legend on the Notice to Holders page

Test Name
EEC SYSTEM TEST CHANNEL A
EEC SYSTEM TEST CHANNEL B
ESS ANTI-ICE SYSTEM
FUEL METERING VALVE SYSTEM CHANNEL A
FUEL METERING VALVE SYSTEM CHANNEL B
FUEL RETURN TO TANK VALVE
HANDLING BLEED VALVE SYSTEMS CHANNEL A
HARNESS CHANNEL A
HARNESS CHANNEL B
IGNITION SYSTEM CHANNEL A IGNITION SYSTEM CHANNEL B
MODULATED AIR SYSTEM
P20/T20 PROBE HEATER
OIL BYPASS VALVE SYSTEM CHANNEL A
OIL BYPASS VALVE SYSTEM CHANNEL B
OIL DEBRIS MONITORING SYSTEM RESET CHANNEL A
OIL DEBRIS MONITORING SYSTEM RESET CHANNEL B
SECONDARY AIR SYSTEM
TURBINE CASE COOLING ACTUATION SYSTEM
THRUST REVERSER INTERLOCK SOLENOID
VFSG THERMAL BYPASS VALVE
VARIABLE STATOR VANE SYSTEM CHANNEL A
VARIABLE STATOR VANE SYSTEM CHANNEL B
VFSG AOHE AIR CONTROL VALVE SYSTEM CHANNEL A
VFSG AOHE AIR CONTROL VALVE SYSTEM CHANNEL B

The Ignition System Test allows the operator to verify the operation of each ignition system in each channel. The test requires the operator to audibly inspect the ignition system for serviceability.

T1000 TEN_LBM_M13_223_01P

© Rolls-Royce plc 2018. Use or disclosure is subject to the legend on the Notice to Holders page

Flight Deck Effects

Introduction

Below is an indication of the associated Flight Deck Effect (FDE) messages for this section, (Starting and Ignition System) together with the message type (level), an explanation of its meaning, dispatch restrictions (if any) and expected actions taken by flight or ground crew.

Note: This is for your guidance only. Due to the nature of the aircraft and engines continual development these may change and Rolls Royce cannot guarantee that they are still current and fully accurate. As such, always refer to the appropriate AMM procedure for reference.

© Rolls-Royce plc 2018. Use or disclosure is subject to the legend on the Notice to Holders page

Message	Type	Dispatch	Meaning
ENG AUTOSTART L (R)	Caution	Do Not Dispatch	The EEC has aborted the autostart on a ground start; or there has been an EGT start redline exceedance whilst starting on the ground or in flight.
ENG START CUTOUT L (R)	Advisory	Short Time Dispatch	Start Switch is in the START position when the EEC has commanded the Start Switch to the NORM position.
ENG SHUTDOWN L (R)	Caution	Not Applicable	The engine was shut down on the ground by the fuel control switch or the engine fire switch.
ENG SHUTDOWN L (R)	Caution	Not Applicable	Both engines were shut down on the ground by the fuel control switches or engine fire switches. This message will clear after both engines have started.
ENG IGNITER L (R)	Status	Short Time Dispatch	The engine failed to ignite using ignition system 1 or there is no power ignition system 1.
ENG IGNITER L (R)	Status	Short Time Dispatch	The engine failed to ignite using ignition system 2 or there is no power ignition system 2.

T1000 TEN_LBM_M13_224_01P

© Rolls-Royce plc 2018. Use or disclosure is subject to the legend on the Notice to Holders page

Starting and Ignition Reference Wiring Diagrams

Introduction

Below is a wiring schematic of the associated units connected to the EEC. This is only a representation of the actual connectors but all plugs and connectors are indicated with the reference identifiers. This should be used for reference only and not be used as a definitive document. For a more detailed explanation (pins and sockets for troubleshooting purposes etc) and for further details, then always refer to the actual wiring diagrams as given within the AMM or FIM electronic documentation.

© Rolls-Royce plc 2018. Use or disclosure is subject to the legend on the Notice to Holders page

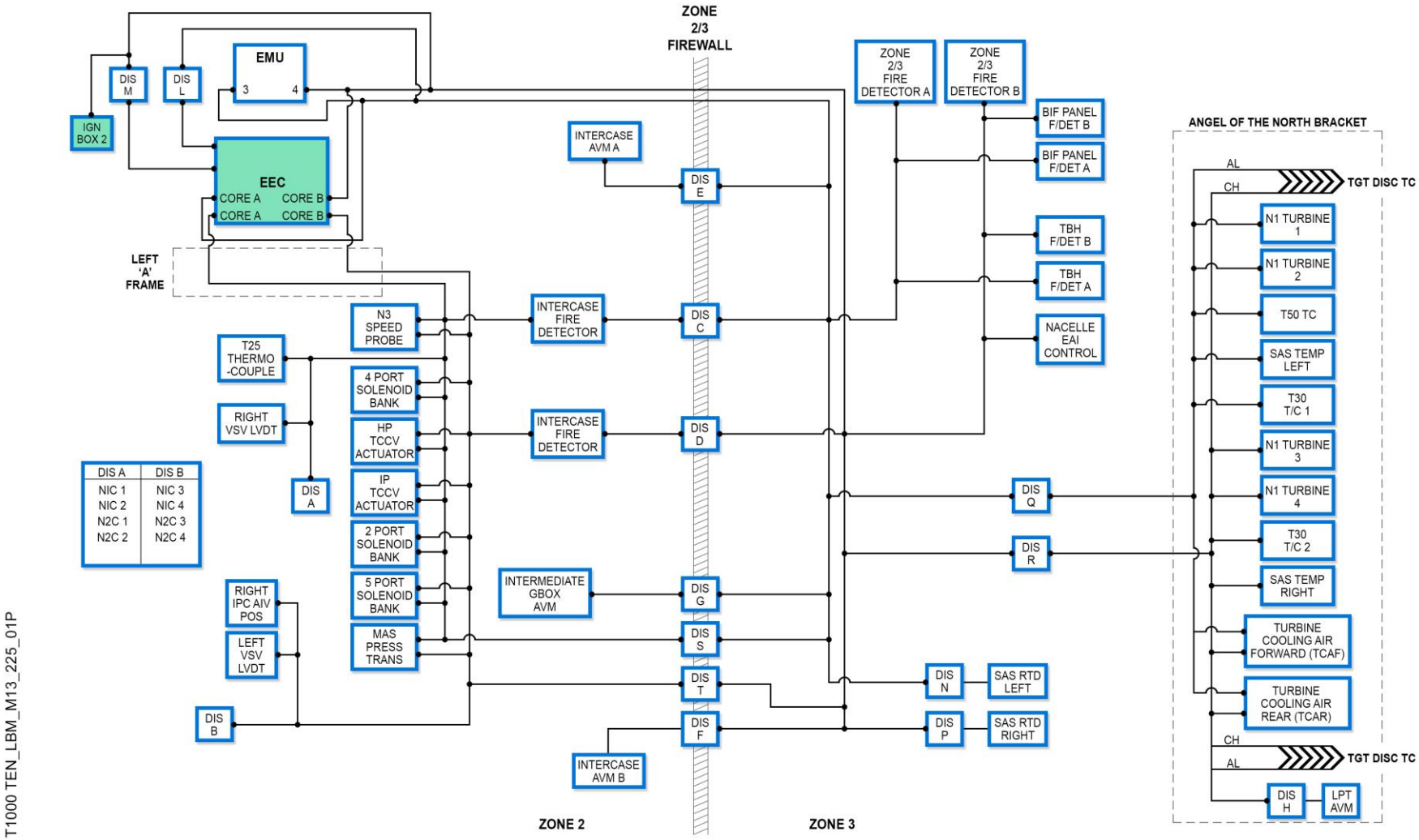

DIS A	DIS B
NIC 1	NIC 3
NIC 2	NIC 4
N2C 1	N2C 3
N2C 2	N2C 4

STARTING SYSTEM WIRING DIAGRAM

© Rolls-Royce plc 2018. Use or disclosure is subject to the legend on the Notice to Holders page

Starting and Ignition Reference Wiring Diagrams

Introduction

Below is a wiring schematic of the associated units connected to the EEC. This is only a representation of the actual connectors but all plugs and connectors are indicated with the reference identifiers. This should be used for reference only and not be used as a definitive document. For a more detailed explanation (pins and sockets for troubleshooting purposes etc) and for further details, then always refer to the actual wiring diagrams as given within the AMM or FIM electronic documentation.

© Rolls-Royce plc 2018. Use or disclosure is subject to the legend on the Notice to Holders page

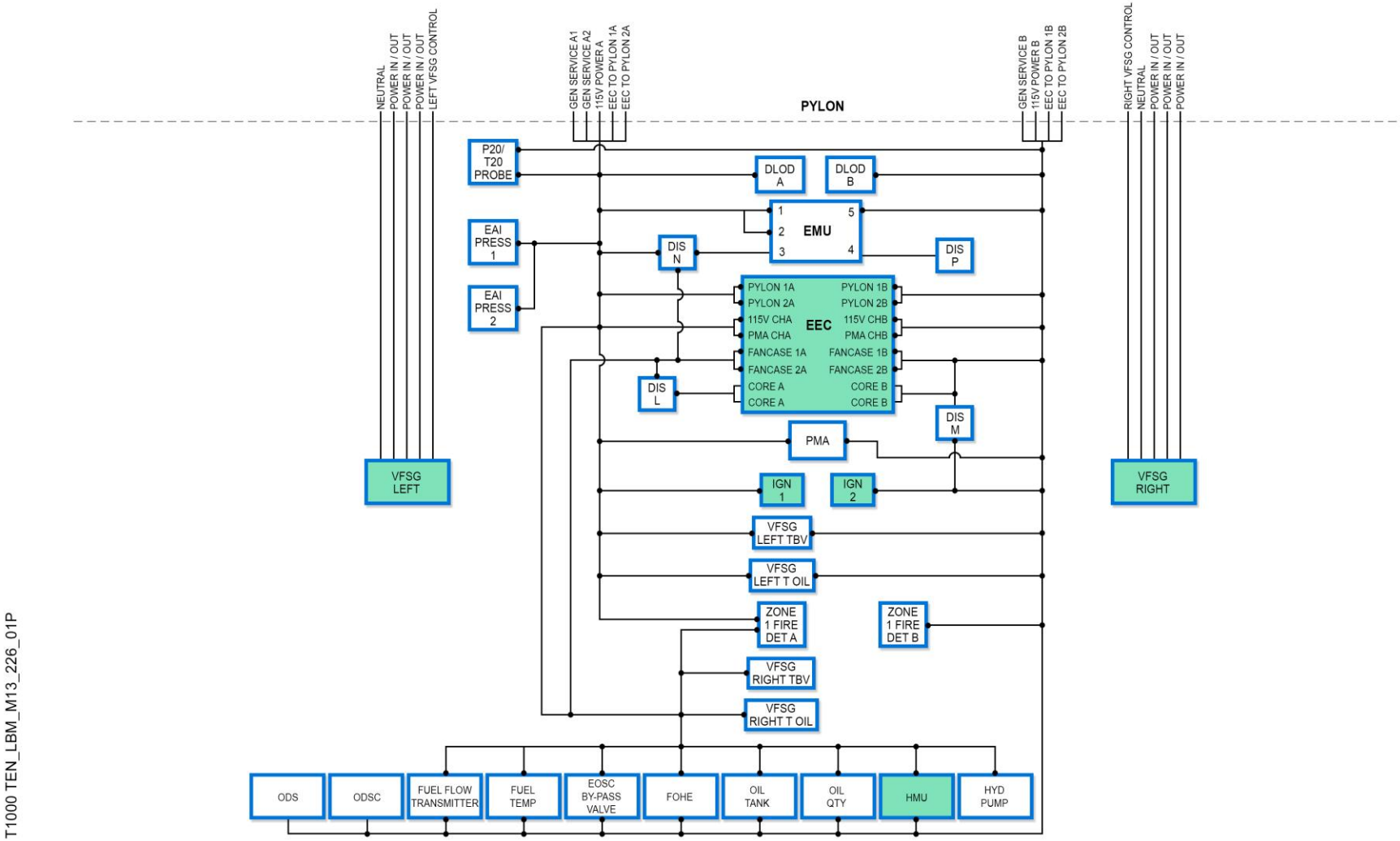

STARTING SYSTEM WIRING DIAGRAM

© Rolls-Royce plc 2018. Use or disclosure is subject to the legend on the Notice to Holders page

END OF SECTION

Section 14 - Basic Troubleshooting

© Rolls-Royce plc 2018. Use or disclosure is subject to the legend on the Notice to Holder page

Onboard Maintenance System

Introduction

The purpose of the Onboard Data Maintenance System (ODMS) for the B787 aircraft is to aid the mechanic and airline in maintaining Aircraft systems. The principal user is the airline mechanic who uses ODMS as a tool to help turn the Aircraft around quickly.

The ODMS is supported by a number of other Aircraft systems and the engine control system being one of these systems. This integrates using the following components:

- Engine Indication & Crew Alerting System (EICAS) & Flight Deck Effects (FDE).
- Engine Electronic Control (EEC).
- Central Maintenance Computing Function (CMCF) & Maintenance Control Display (MCD) Function.
- Minimum Equipment List (MEL).
- Fault Identification Manual (FIM).

The system monitors Flight Deck Effect (FDE) activity and is capable of matching, or correlating, applicable FDE's with the original maintenance messages as set by the systems self-checking BITE fault isolation processes.

Flight Deck Effects

The airplane system monitor conditions related to loss of a system or function. FDE's then informs the flight and maintenance crews of conditions related to safe operation. While the flight crew monitor and may need to react to these effects. The maintenance crew must find the cause of an FDE to find the corrective action. Together with the associated maintenance message(s), it is then possible to use this information together with the FIM, associated wiring diagrams and Ground tests to troubleshoot and isolate the fault.

Maintenance Messages

Maintenance messages supply the maintenance crew with detailed fault information to help the troubleshooting process. The aircraft systems monitor themselves for faults using their own Built in Test Equipment (BITE). If a system detects a fault, it sends maintenance message data (as a fault code) to the CMCF. The CMCF is a software function in each of the CCR Cabinets, which processes the data and shows a readable maintenance message so that maintenance crews can examine it, find the problem and carry out the necessary corrective action.

FDE/Maintenance Message Correlation

The CMCF processes all fault code reports from all aircraft systems (including the EECS) into Maintenance Messages that are displayed to the users. In addition, the CMCF correlates the maintenance message to FDEs and can also store maintenance messages to provide historical data and provide links into other electronic maintenance documents. The CMCF provides a centralised location for performing Line Replaceable Unit (LRU) Ground Tests though the Aircrafts' systems as and when required.

Note: A number of different maintenance messages can set the same FDE so this correlation is important for accurate troubleshooting to take place.

© Rolls-Royce plc 2018. Use or disclosure is subject to the legend on the Notice to Holder page

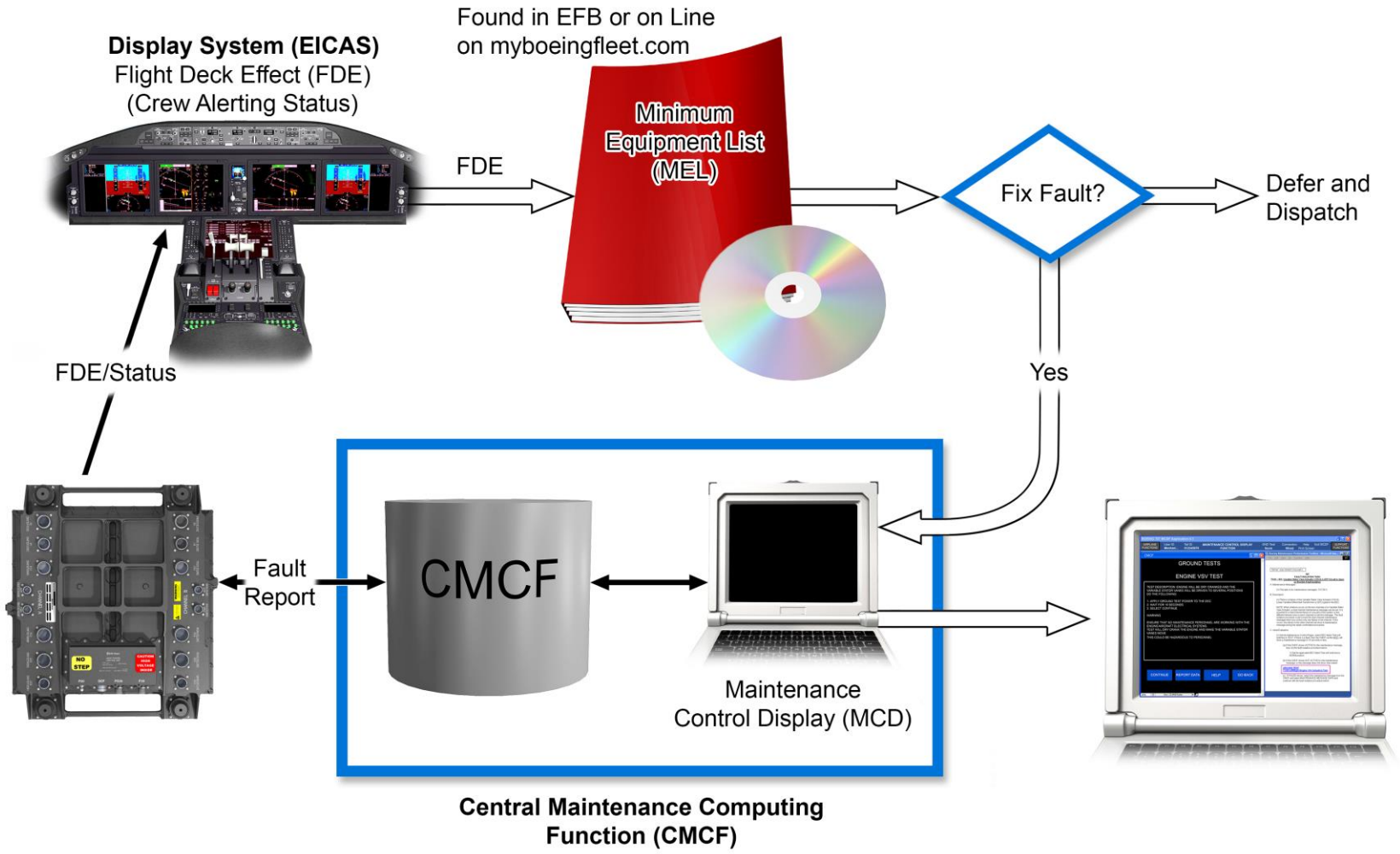

T1000 TEN_LBM_M14_227_01P

MAINTENANCE SYSTEM

© Rolls-Royce plc 2018. Use or disclosure is subject to the legend on the Notice to Holder page

Central Maintenance Computing Function

Components

The Central Maintenance Computing Function (CMCF) is a software function within each of the Common Computing Resource (CCR) Cabinets. Communication between each CMCF is via the CDN and using either the Maintenance laptop (wired or wireless), MFDs or the Electronic Flight Bag (EFB), accesses the CMCF. The CMCF collects stores and displays maintenance information for all the systems onboard the 787. Information from the systems (e.g. the EEC) includes all the fault reports received, configuration data and associated shop fault data all of which can be retrieved as necessary.

EECS

The EECS supports the operation and maintenance of the aircraft by sending Fault Reports and where applicable engine related Flight Deck Effects and Correlation Reports to the CMCF. The EECS maintenance function accurately identifies failed equipment and clearly differentiates between failures affecting safety and those affecting only the economics of operation.

EICAS Indications

There is a range of EICAS fault indications provided by the EECS maintenance function. Each is designed for a specific purpose and level of indication to meet the needs of the intended user be it flight or maintenance crew.

Crew Alerting Messages

Crew Alerting Messages provides the crew with an indication of system configuration via the EICAS and PFD screens. They also identify the specific crew procedures required to continue safe operation of the aircraft. There are four (4) levels of Crew Alerting Messages and one (1) Status message as follows:

1. **Time Critical**

Immediate crew action required, red message on the PFD screens and an aural alert.

2. **Warning**

Immediate crew action required, red message on the EICAS screen, an aural alert and the warning light illuminates.

3. **Caution**

Immediate crew action MAY be required, amber message on the EICAS screen, general caution aural alert and the Master Caution light illuminates.

4. **Advisory**

Crew awareness required and action MAY be required. An AMBER message will be seen on EICAS screen but there will be no aural alert.

Status Messages

No flight crew awareness or action is required and the message may or may not be correlated to a Flight Deck Effect. There are two types of Status Message:

- “No Dispatch” faults.
- Faults that can be deferred by using the Dispatch Deviation Guide (DDG).

Maintenance Messages

These provide more detailed information at the level necessary to identify the maintenance action required to correct the fault (identify specific FIM procedures). These messages may or may not be correlated to a Flight Deck Effect.

© Rolls-Royce plc 2018. Use or disclosure is subject to the legend on the Notice to Holder page

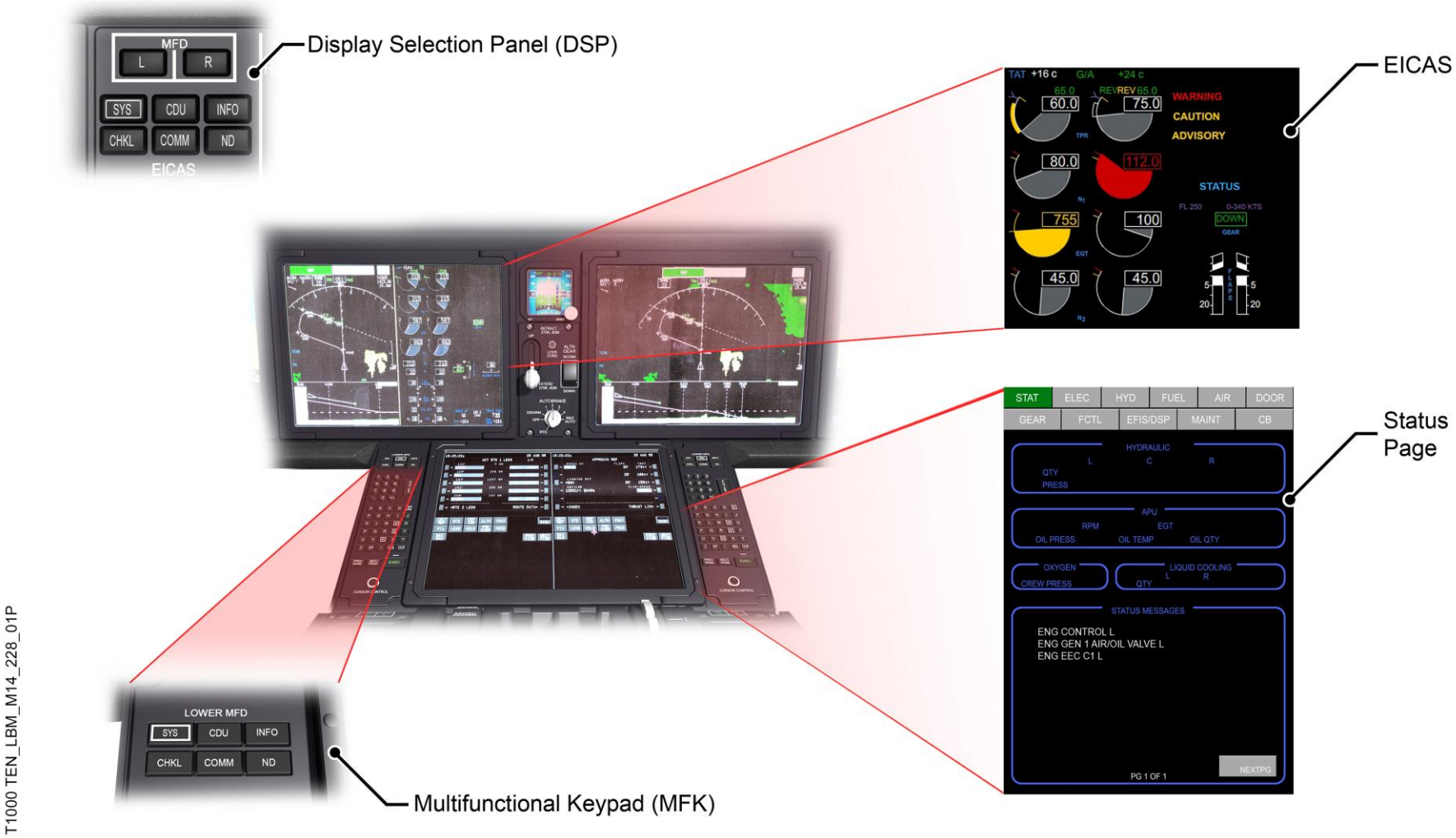

CREW ALERTING MESSAGES & STATUS

© Rolls-Royce plc 2018. Use or disclosure is subject to the legend on the Notice to Holder page

Maintenance Control Display (MCD) Function

Introduction

The MCD (via maintenance laptop and EFB) permits maintenance crews to access the Central Maintenance Computing Function (CMCF). It is capable of interrogating and accessing all detected faults. It also shows the correlation that has been set by the CMCF between FDEs (Warnings, Cautions and Status Messages) and the maintenance messages that set them.

Fault Isolation Manual (FIM)

The software allows the maintenance crew to link directly from the FDE and associated maintenance message into an electronic version of FIM. The link will take you to the correct procedure in order to carry out troubleshooting to isolate any particular fault. While following the troubleshooting procedure, you can carry out certain step tasks electronically from the laptop (Circuit Breaker Indication Control (CBIC)) to prepare for tasks and refer to embedded wiring diagrams.

Ground or Initiated Tests

The Ground Tests provide the means by which the maintenance personnel can conduct Engine related tests in a safe and controlled manner. CMCF screens guide the operator through the test selection, set-up, warnings, in-test, close-up and result analysis phases.

The Ground Tests provide a comprehensive check of a particular system, which may be performed normally without starting the Engine, or in some cases (e.g. bleed valve control system or ESS anti-ice system) require Engine running at ground idle. The tests may be carried out as part of the fault isolation process and to confirm the fault or that it has been rectified.

The current Ground Tests are:

- EEC System Channel A
- EEC System Channel B
- ESS Anti-Ice System
- Fuel Metering Valve System Channel A
- Fuel Metering Valve System Channel B
- Fuel Return To Tank Valve
- Handling Bleed Valve System
- Harness Channel A
- Harness Channel B
- Ignition System Channel A
- Ignition System Channel B
- Modulated Air System
- P20/T20 Probe Heater
- Oil Bypass Valve System Channel A
- Oil Bypass Valve System Channel B
- Oil Debris Monitoring System Reset Channel A
- Oil Debris Monitoring System Reset Channel B
- Secondary Air System
- Turbine Case Cooling Actuation System
- Thrust Reverser Interlock Solenoid
- Variable Stator Vane System Channel A
- Variable Stator Vane System Channel B
- VFSG AOHE Air Control Valve System Channel A
- VFSG AOHE Air Control Valve System Channel B

© Rolls-Royce plc 2018. Use or disclosure is subject to the legend on the Notice to Holder page

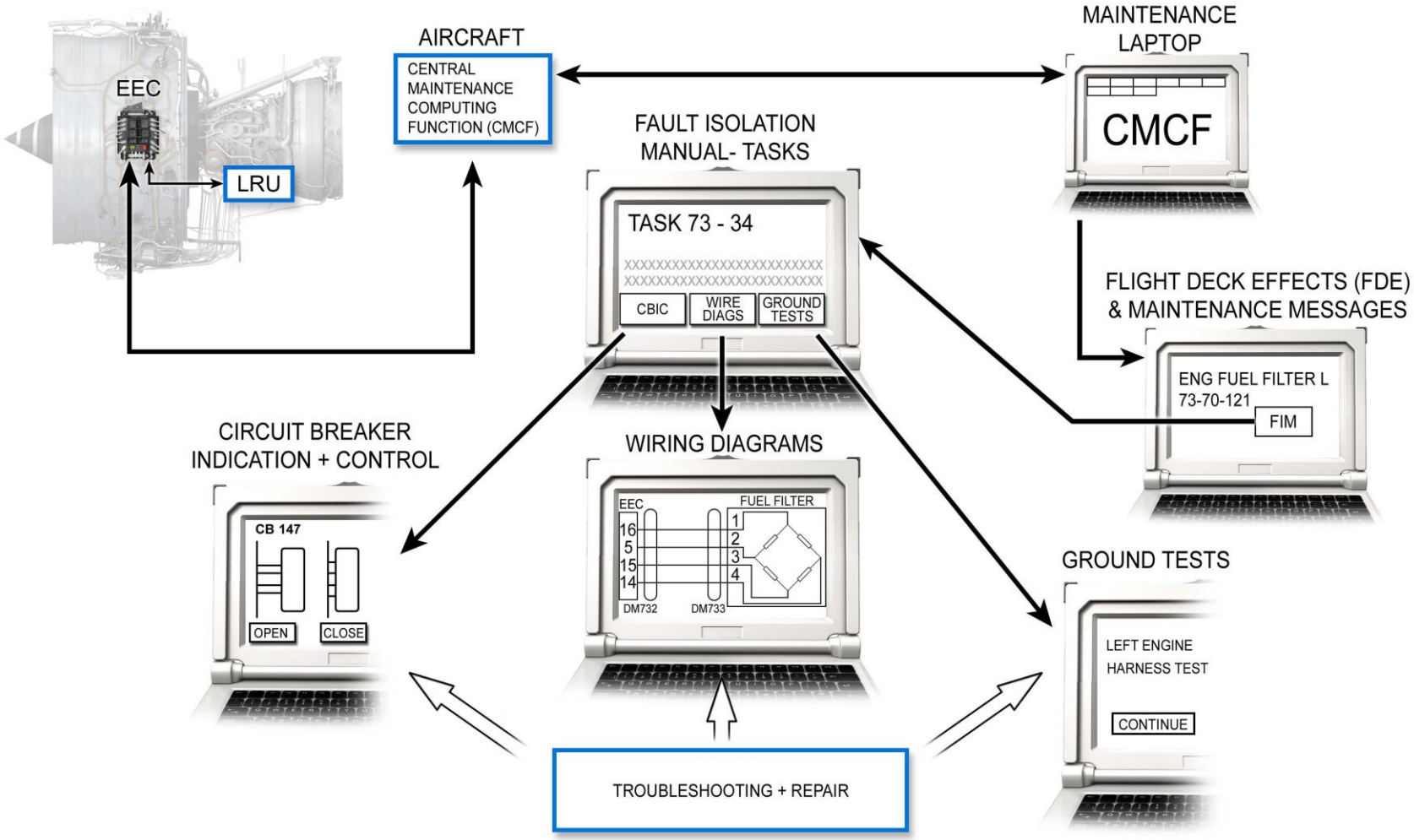

T1000 TEN_LBM_M14_229_01P

TROUBLESHOOTING FLOW

© Rolls-Royce plc 2018. Use or disclosure is subject to the legend on the Notice to Holder page

Maintenance Control Display (MCD) Function

Maintenance Laptop

Having powered up and logged on to the maintenance laptop to the required authorisation level, access is through the Maintenance Control Display Function (MCDF) option and then via the Airplane Functions button.

The Airplane Functions window provides link access to the following functions with the ground test switch in NORM:

- Central Maintenance Computing Function (CMCF)
- Onboard Data Load Function (ODLF)
- Airplane Condition Monitoring Function (ACMF)
- Onboard Storage Management (OSM)
- Circuit Breaker Indication and Control (CBIC)
- System Synoptics (SYS)
- Maintenance Data Pages (MAINT DATA PGS)
- Maintenance Control Pages (MAINT CONTROL PGS)
- Electronic Flight Bag (EFB)
- Cabin Services System (CSS)
- In Flight Entertainment (IFE)

With the ground test switch in ENABLE, the above functions are available in addition to the following:

- Circuit Breaker Interface Control (CBIC)
- Onboard Software management (OSM)

With the ground test switch in DATA LOAD, the above functions are available in addition to the following:

- On-Board Data Load Function (ODLF)

Activation of the links is dependent upon what applications are available to the laptop, what authorization levels the operator holds and the connection type to the aircraft (wired or wireless).

Finally, if you select the CMCF hyperlink in the Airplane Functions window, this then opens a CMCF main menu screen, as shown in the example below.

© Rolls-Royce plc 2018. Use or disclosure is subject to the legend on the Notice to Holder page

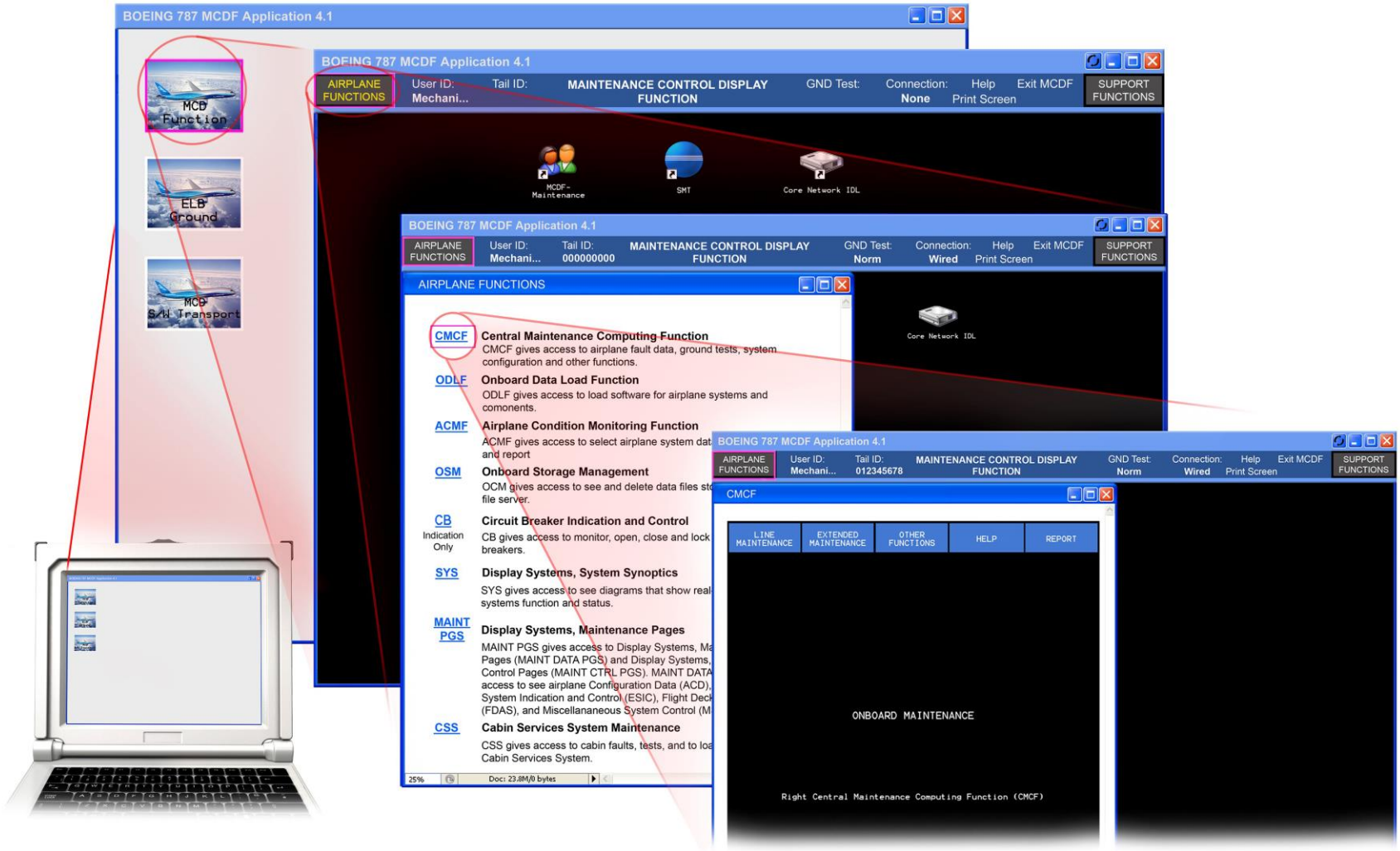

T1000 TEN_LBM_M14_230_01P

MAINTENANCE LAPTOP CMCF MENU

© Rolls-Royce plc 2018. Use or disclosure is subject to the legend on the Notice to Holder page

Central Maintenance Computing Function (CMCF)

CMCF Menu

The CMCF offers the maintenance operator a menu of Line and Extended Maintenance screen functions.

The following Main Menu selections are available at this point:

- LINE MAINTENANCE
- EXTENDED MAINTENANCE
- OTHER FUNCTIONS
- HELP
- REPORT

On selection of the Line Maintenance option the following sub-menu items will then be displayed:

- INBOUND FLIGHT DECK EFFECTS – this shows the Flight Deck Effects and correlated maintenance messages from the last flight (leg 00).
- EXISTING FLIGHT DECK EFFECTS – this shows all active and latched flight deck effects.
- GROUND TESTS - this tests a particular system or component in a system to verify operation or reset faults.
- SYSTEM CONFIGURATION - shows the hardware, serial number and software part numbers for a system.
- EXIT MAINTENANCE – Stops the CMCF session.

Inbound Flight Deck Effects

Selection of the Inbound Flight Deck Effects (FDE) option displays a list of the FDEs by time with the newest shown first that had occurred during the last flight leg.

Each FDE entry is tagged with:

- FDE Title
- Fault Code
- Maintenance Message Summary Group
- Number of FDE
- FDE Activity
- FDE Time and Date

Shown below is a typical FDE entry and the correlated maintenance message together with a Maintenance Message Data button at the bottom of the screen. When this button is pressed more information about the fault will be displayed.

Flight Deck Effect

The FDE will be displayed as per the original indication, whether it is driven directly from the EICAS as a Warning or from the Status screen following a Status indication.

In this example, it is shown as a Status message and is accessible by maintenance crews to assess the level of redundancy of the system and the dispatchability of the aircraft after consulting the Dispatch Dispatch Deviation Guide.

© Rolls-Royce plc 2018. Use or disclosure is subject to the legend on the Notice to Holder page

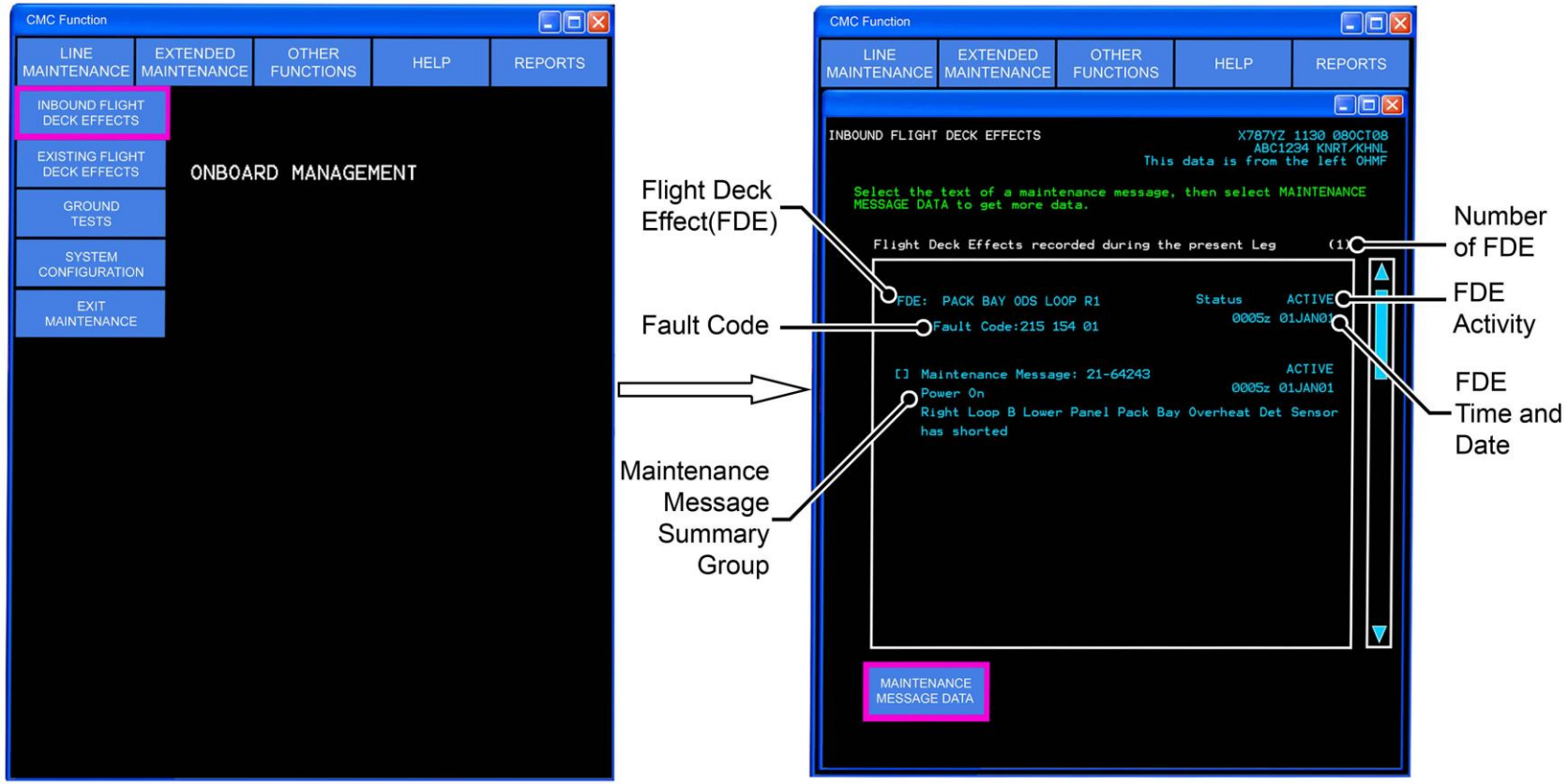

T1000 TEN_LBM_M14_231_01P

INBOUND FLIGHT DECK EFFECTS

© Rolls-Royce plc 2018. Use or disclosure is subject to the legend on the Notice to Holder page

Maintenance Message Data

Selection of the Maintenance Message Data option from the Inbound Flight Deck Effects Menu allows more in-depth information by displaying:

- Title.
- Fault Information (Fault Data and Source).
- Maintenance Message Information.
- Message Information and Activity (Active, Not Active or Latched).
- Occurrence, Intermittency and Flight Leg Information.
- Recommended Maintenance Actions.
- Correlated Flight Deck Effects.
- Buttons to allow access to other options.

All of this data is generated from that stored in the CMCF based upon the EEC fault reports and FDE.

Maintenance Message Number Construction

The construction the number in the example (**73 – 72411)** is as follows:

- First two numbers (**73**) = The ATA chapter number.
- First number of the second group (**7**) = The Channel in which the fault was detected (7 = Channel A, 8 = Channel B and 9 = Dual Channel).
- Next three numbers of the second group (**241**) = The Fault Code.
- Last number of the second group (**1**) = The Engine Position (1 = No 1 left engine & 2 = No2 right engine).

Maintenance Message Activity

Maintenance Message activity can be either of the following:

- **Active –** A Maintenance Message is active if a system continues to report a fault to the CMCF.
- **Latched** – A Maintenance Message is latched if it is found to be an intermittent fault of a critical airplane system or a fault that is only evident during certain conditions or flight phases.
- **Not Active** – A Maintenance Message is not active if a system has had a fault but it is no longer being reported to the CMCF.

Occurrence and Intermittency

This field informs the engineer when the fault occurred and what flight phase it was in.

If a fault was intermittent it will also display how many times the fault became active during the leg.

Fault Isolation Button

The fault Isolation button allows access to the Fault Isolation Manual to allow the engineer to follow the troubleshooting procedure and have access to other maintenance related data.

© Rolls-Royce plc 2018. Use or disclosure is subject to the legend on the Notice to Holder page

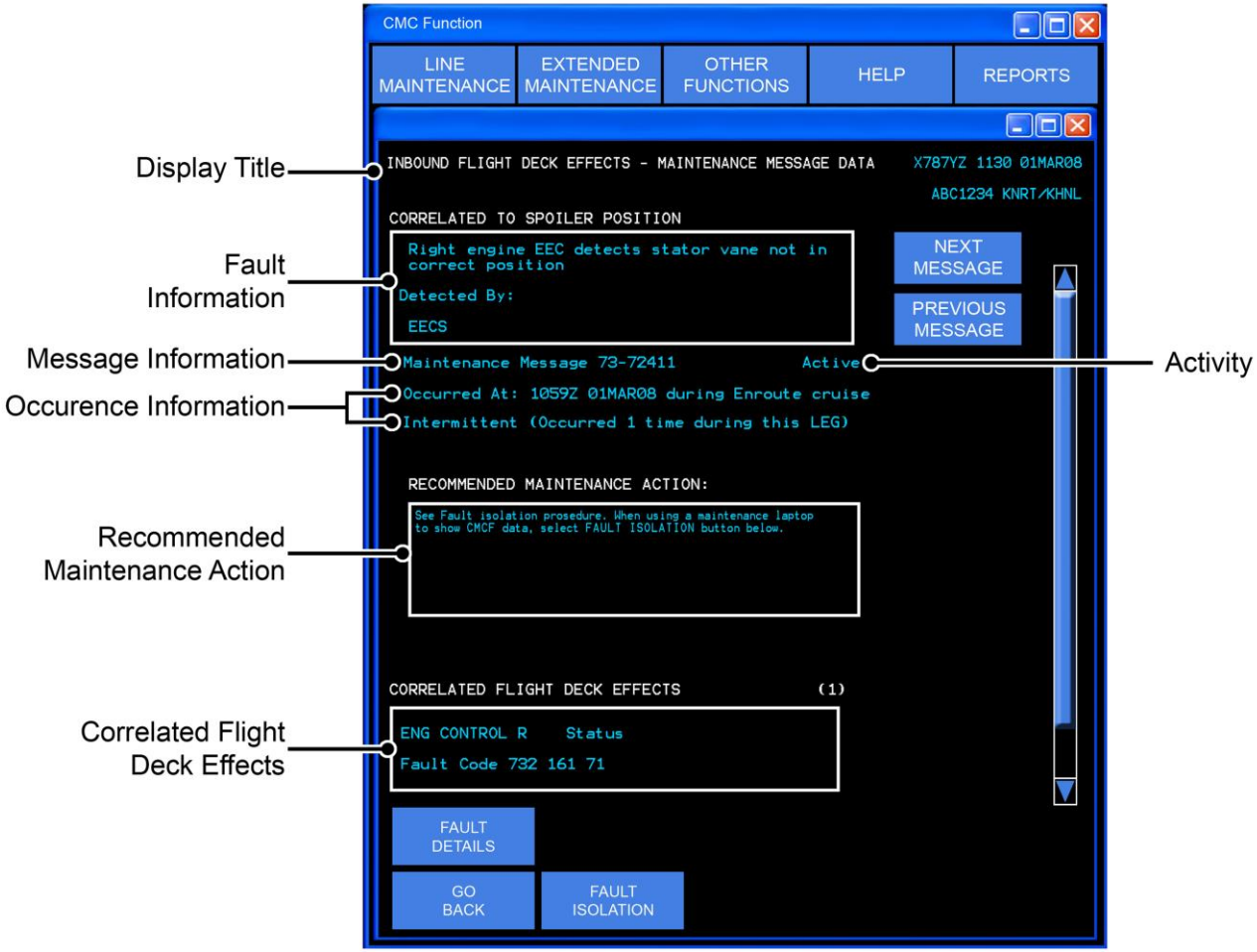

T1000 TEN_LBM_M14_232_01P

MAINTENANCE MESSAGE DATA

© Rolls-Royce plc 2018. Use or disclosure is subject to the legend on the Notice to Holder page

Fault Isolation Manual

Introduction

The Fault Isolation Manual (FIM) provides a structured method for the operator to report and correct faults in aircraft systems using the fault isolation procedures. It can be automatically opened at the appropriate point or task by using the Fault Isolation Task button from the Maintenance Massage Data page. The FIM can also be used in isolation of the electronic hyperlink by entering using a number of entry options (FDEs, Observed faults, Maintenance message or Fault message numbers etc).

It is possible to link from the FIM to other active screens as and when required by the FIM procedure. When called upon to trip or set a circuit breaker, the FIM will show a hyperlink to the Circuit Breaker Indication & Control (CBIC) where this can be carried out electronically. Also, if a Ground Test is required to confirm the existence of a fault or performed to confirm that the fault has been rectified, then the FIM will again show a hyperlink to the Ground Test menu where this can be carried out. Standard hyperlinks also exist between documents to assist other aspects of rectification and troubleshooting (e.g. LRU replacements and wiring diagrams for line continuity test to be carried out as required by the Fault Isolation Task to isolate the fault to an LRU or associated wiring).

Application & Example of Use

FIM to Ground Tests

In this example, the Fault Isolation Task button (from the previous page) has linked to TASK - 803. Variable Stator Vane Actuator (VSVA) LVDT Circuit is Open or Shorted under the Support Functions menu of the Maintenance Control Display (MCD). Following the task has shown a need to carry out a Ground Test to confirm the fault before continuing with further troubleshooting. The GROUND TEST hyperlink now returns back to the Airplane Functions (CMCF) automatically, to the correct Ground Test opening page to prepare for the test to be carried out.

In this example, the Ground Test is to cycle the VSVA and check its performance under the control of the EEC. In order for this to take place; the associated engine will need to be cranked (motored) to produce the required fuel pressure to operate the VSVAs.

Once the test Set-up, In-Progress, Reporting Close-Up and Post Test phases have been carried out, the test result will be given as Pass or Fail. If a Fail result is shown, then access to the associated Maintenance Message will be given by an on screen via a Maintenance Message Data button and the troubleshooting process can be repeated or return to the previous original task to proceed further.

© Rolls-Royce plc 2018. Use or disclosure is subject to the legend on the Notice to Holder page

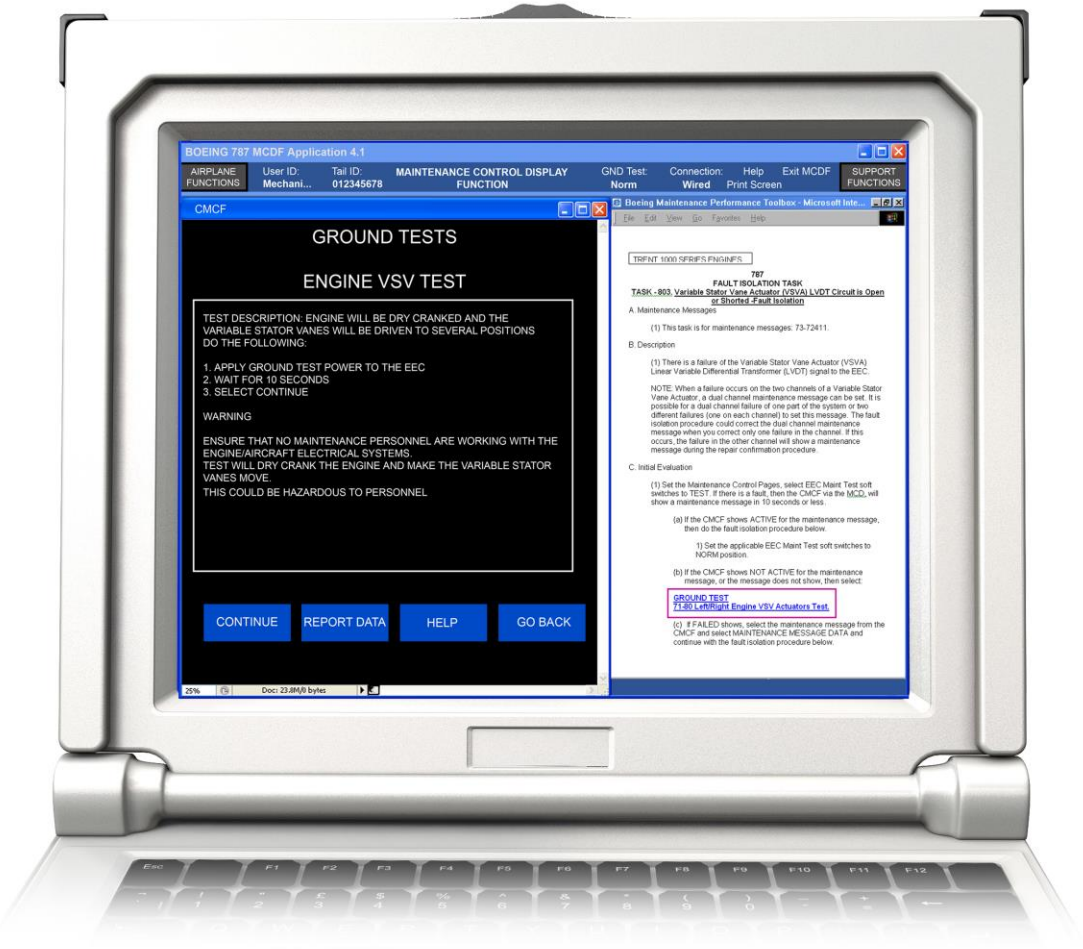

T1000 TEN_LBM_M14_233_01P

FIM TO GROUND TESTS

© Rolls-Royce plc 2018. Use or disclosure is subject to the legend on the Notice to Holder page

Application & Example of Use

FIM to Electrical Diagrams

Continuing with the previous example of a VSVA LVDT failure, the FIM has now indicated that wiring checks are necessary to isolate the fault to either the LRU or EEC Connectors (plugs and / or receptacles), the wiring between the two, the VSVA or the EEC itself. A process of electrical checks is now necessary, and the FIM shows a hyperlink to the required wiring diagram to support the work. The process indicated is as follows:

- VSVA Connector Inspection – Having ensured that no electrical power is applied to the EEC, remove the electrical connectors at the VSVA LVDTs and inspect them for obvious damage and contamination.
- Resistance and Continuity Checks of the VSVA connector (socket) - Carry out resistance, continuity checks between the appropriate pairs of pins on the VSVA LVDTs followed by checks for short circuits to ground on all pins. (If a fault is found at this point then the relevant VSVA should be replaced. If no fault is found then reconnect the connectors and continue with the troubleshooting process).
- Inspection of Wiring Harness – Carry out an inspection of the wiring harness from between the EEC and the VSVAs for signs of damage (e.g. fretting, chaffing, insulation damage, exposed wires, burning or shorting).
- EEC Connector Inspection – Remove the appropriate electrical connectors at the EEC and inspect them for damage or contamination.

Note: For the next check, under no circumstances should the resistance, continuity or short circuit check be carried out on the EEC Socket as damage to the EEC will result.

- Resistance and Continuity Checks of the wiring between the VSVA and the EEC (plug) - Carry out resistance, continuity checks between the appropriate pairs of pins from the EEC to VSVA LVDTs followed by checks for short circuits to ground on all pins. (Having already confirmed VSVA condition on the previous check, then if a fault is now found at this point then the harness must be suspected and rectified as required. If no fault is found then the EEC should be suspected as the cause of this fault and should be replaced.

© Rolls-Royce plc 2018. Use or disclosure is subject to the legend on the Notice to Holder page

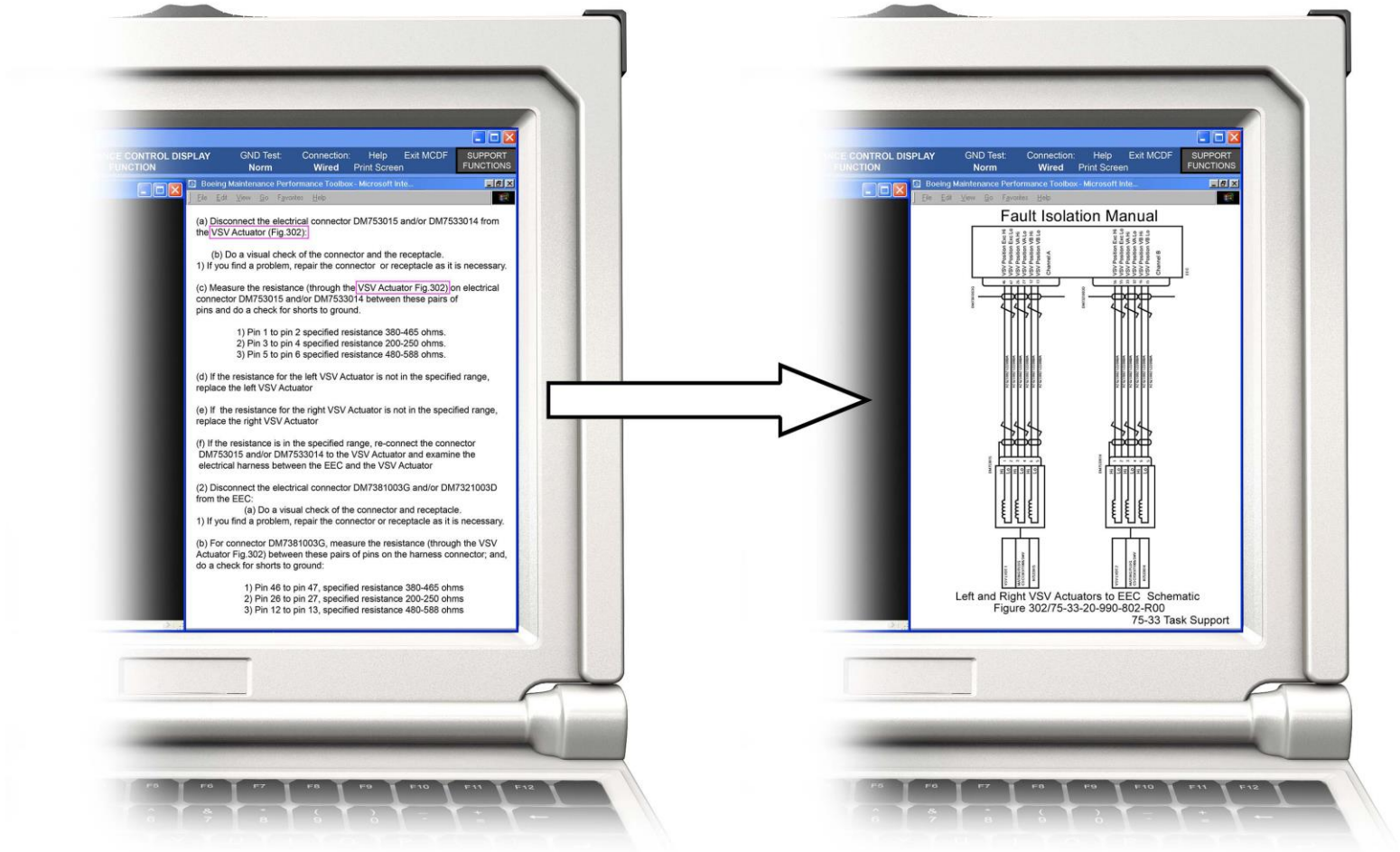

T1000 TEN_LBM_M14_234_01P

FIM TO ELECTRICAL DIAGRAM

© Rolls-Royce plc 2018. Use or disclosure is subject to the legend on the Notice to Holder page

Ground Tests

The Ground (initiated) Tests provide the means by which the maintenance personnel can conduct Engine related tests in a safe and controlled manner. Central Maintenance Computing Function (CMCF) generated screens guide the operator through the Test Selection, Set-up, and Warnings, In-test, Close-up and Result analysis phases.

Ground Tests provide a comprehensive check of a particular system. They may be performed normally without starting the Engine or in some cases (e.g. bleed valve control system, ESS anti-ice system or turbine clearance control system) may require the engine to be operated at ground idle conditions, or motoring of the engine using only one VFSG while the test takes place.

The choice of which tests to carry out is influenced by maintenance experience that identifies which functions need to be checked at regular maintenance intervals, troubleshooting or following LRU replacements. It will not normally be necessary to move either the Engine Start or the Fuel Control Switches and moving them during a test will normally abort the process.

Special Functions

Also included are a number of functions that are termed "Special Functions". These are implemented in the same way as the initiated tests but have no specific pass / fail criteria at the end. The following are the Special functions from the Engine Menu:

- Dry Motoring Special Function – motors the engine using the Engine Start Switch to Start with the Fuel Control Switch is to the Cut-Off position.
- Wet Motoring Special Function - motors the engine using the Engine Start Switch to Start and the Fuel Control Switch is to the Run position.
- Core Wash Special Function - motors the engine using the Engine Start Switch to start with the Fuel Control Switch is to the Cut-Off position.

Note: While the motoring cycles are being performed, the Ignition System is automatically inhibited by the CMCF, however, it is also advisable to isolate or pull (electronically) the associated Engines' ignition Circuit Breaker (CB).

Navigating Though a Ground Test

From the Airplane Functions of the Maintenance Control Display Function, select the CMCF gives access to the top level menu. Continue as follows:

- Select Ground Test from the Line Maintenance menu.
- Select ATA system to be tested (e.g. 71 80 Engine).

© Rolls-Royce plc 2018. Use or disclosure is subject to the legend on the Notice to Holder page

T1000 TEN_LBM_M14_235_01P

GROUND TESTS 1

© Rolls-Royce plc 2018. Use or disclosure is subject to the legend on the Notice to Holder page

Navigating Through a Ground Test

Continued:

- Select Engine System to be tested.
- Select CONTINUE (The initial test instructions are displayed).

A brief Test Description is then given covering the process of this particular test together with the set-up instructions to prepare for the test to be carried out. In addition, warnings are also given to cover any hazards that might be present as a result of the test.

- Follow the instructions shown on the display.

Select CONTINUE.

© Rolls-Royce plc 2018. Use or disclosure is subject to the legend on the Notice to Holder page

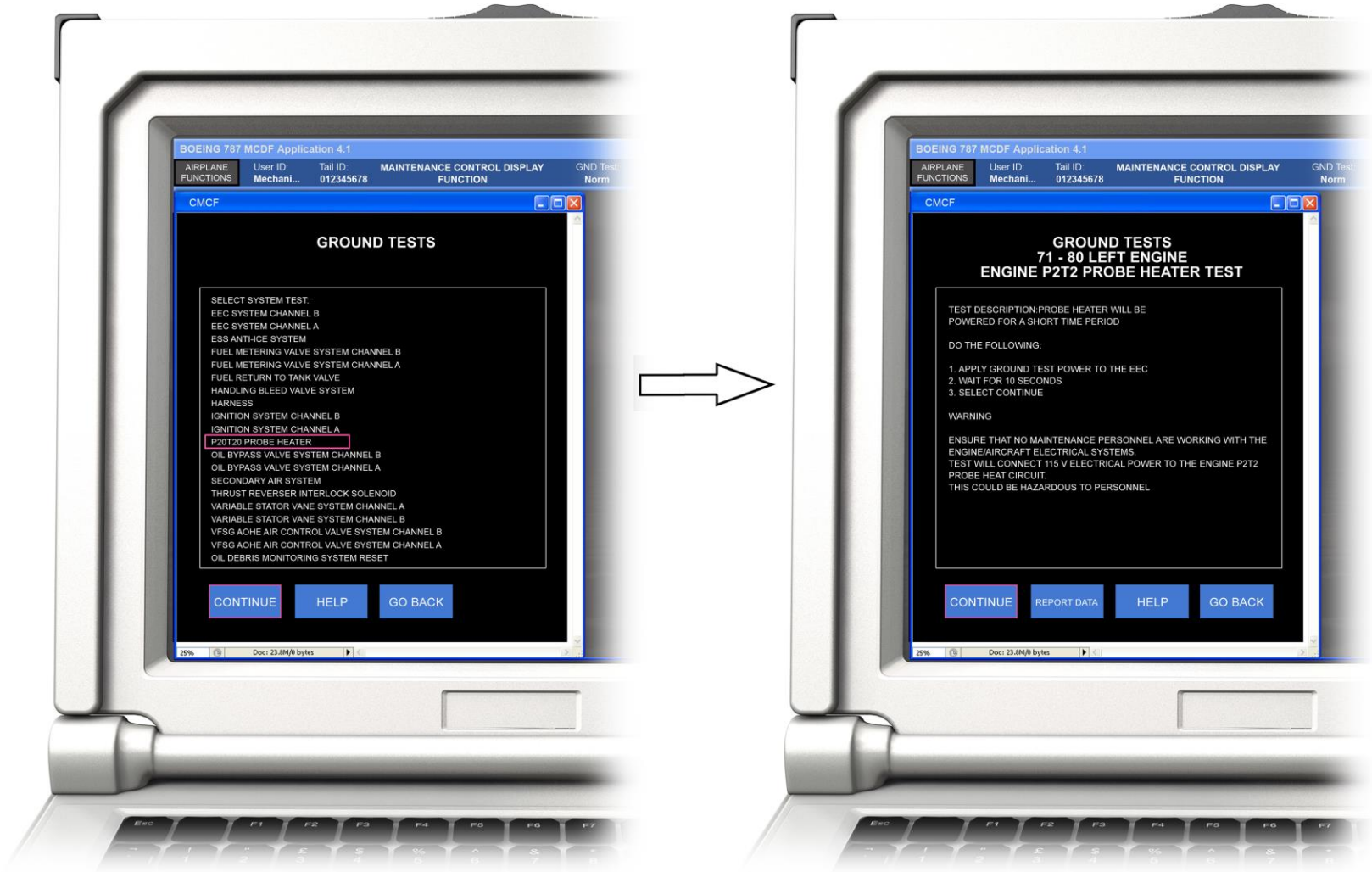

T1000 TEN_LBM_M14_236_01P

GROUND TESTS 2

© Rolls-Royce plc 2018. Use or disclosure is subject to the legend on the Notice to Holder page

Navigating Though a Ground Test

Continued:

On selecting Continue from the previous page, then as the EEC and the CMCF are ultimately responsible for the safe operation of the Ground Test, then a series of pre-test check conditions are carried out. On completion of these checks, then the outcome is displayed as the TEST CONDITION result shows on the display. It can indicate any of the following:

- INHIBITED (not shown here).
- CANNOT OPERATE (not shown here).
- READY.

If the Test Condition shows either INHIBITED or CANNOT OPERATE then a TO TEST button is displayed (in place of the START TEST button shown below) to display the instructions necessary to configure system correctly and permit the test continue. Once these have been satisfied and the Test Condition result indicates READY, then select CONTINUE to start the test.

While the test is being carried out, the Test Condition will now show OPERATING and a STOP TEST button is made available to terminate the test my the maintenance crew at any point. In addition, a Maintenance Message dialog box is shown in preparation of a fault being detected by the EEC and a message being set. Selecting the text of any Maintenance Message and selecting the MAINTENANCE MESSAGE DATA button will show the details of the fault.

© Rolls-Royce plc 2018. Use or disclosure is subject to the legend on the Notice to Holder page

T1000 TEN_LBM_M14_237_01P

GROUND TESTS 3

© Rolls-Royce plc 2018. Use or disclosure is subject to the legend on the Notice to Holder page

Navigating Though a Ground Test

Continued:

On completion of the test the TEST CONDITION will show either:

- PASSED
- FAILED

If the test indicates Failed, select the maintenance message (highlighted), then select MAINTENANCE MESSAGE DATA to obtain more data on the fault.

Note: If more than one fault is related to the failure then the display will show the NEXT MESSAGE. Additional data can be obtained in the same way as above after NEXT MESSAGE has been selected.

© Rolls-Royce plc 2018. Use or disclosure is subject to the legend on the Notice to Holder page

T1000 TEN_LBM_M14_238_01P

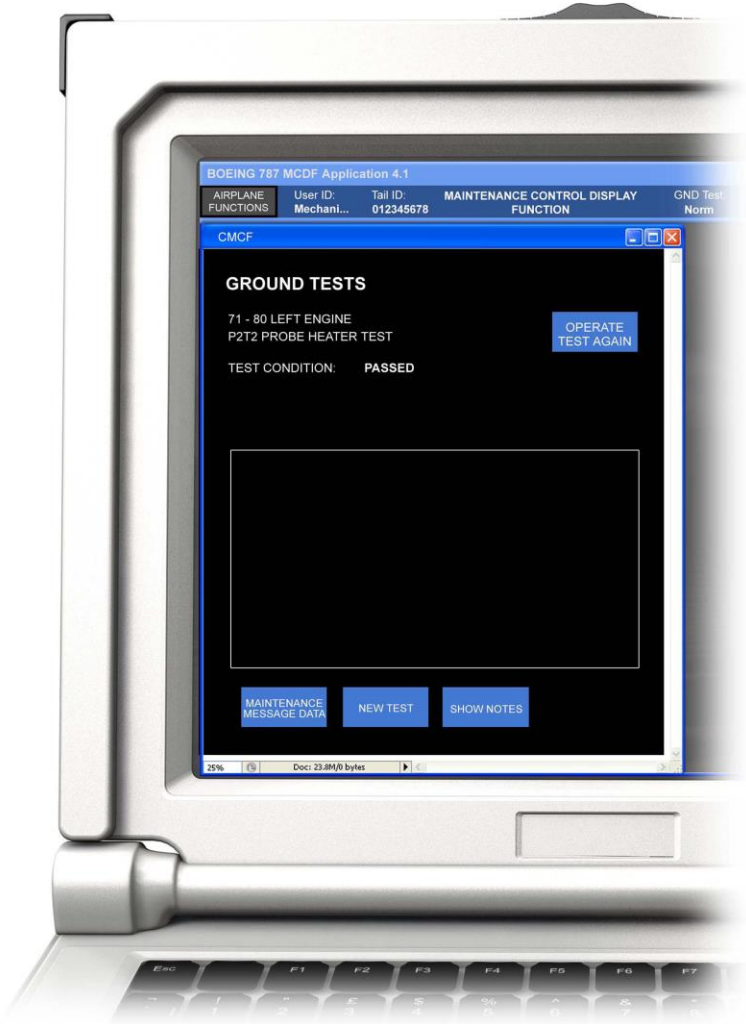

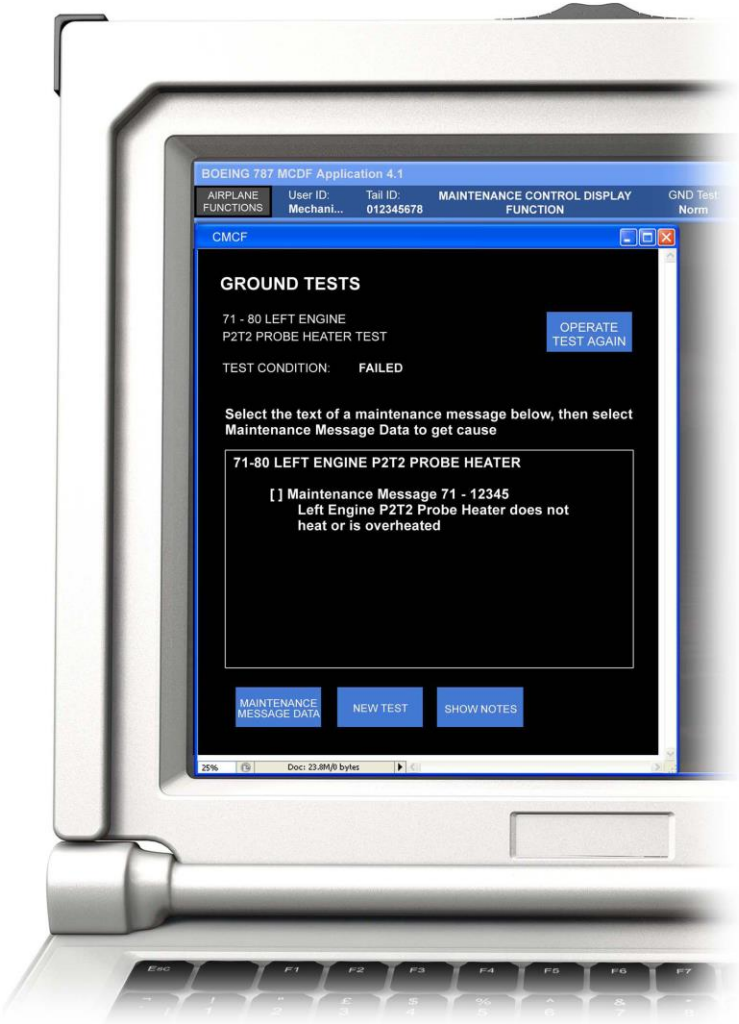

GROUND TESTS 4

© Rolls-Royce plc 2018. Use or disclosure is subject to the legend on the Notice to Holder page

Central Maintenance Computing Function (CMCF)

Extended Maintenance Selection

Under the Extended Maintenance menu the following options are available to the maintenance crew when more time is available, such as during an overnight stop.

On selection of the Extended Maintenance option the following sub-menu items will then be displayed:

- **Present Leg Faults** - Shows the maintenance messages for the current flight leg grouped by Flight Deck Effect with the most recent first. Non-correlated maintenance messages are shown at the end of the FDEs. The present leg faults display also shows the faults by ATA chapter number and ATA name.
- **Existing Faults** - Show maintenance messages for each ATA chapter that has active and latched faults in memory. The user can also group the faults by FDE.

  Note: Using the Existing Faults option is an excellent way of checking and establishing if a fault is sill current after or during the troubleshooting process provided it is included in the systems BITE operation for the current conditions.
- **Fault History** - Shows a record of faults that occurred during the previous flight legs and provides access to:
  - Single Faults.
  - All faults for an ATA chapter.
  - All faults.
  - Faults in the history database.
- **Maintenance Enabled/Disabled** - Provides access to:
  - Enable or disable the flight leg transition.
  - Enable or disable maintenance phase.

Exit Maintenance - Ends the CMCF session.

© Rolls-Royce plc 2018. Use or disclosure is subject to the legend on the Notice to Holder page

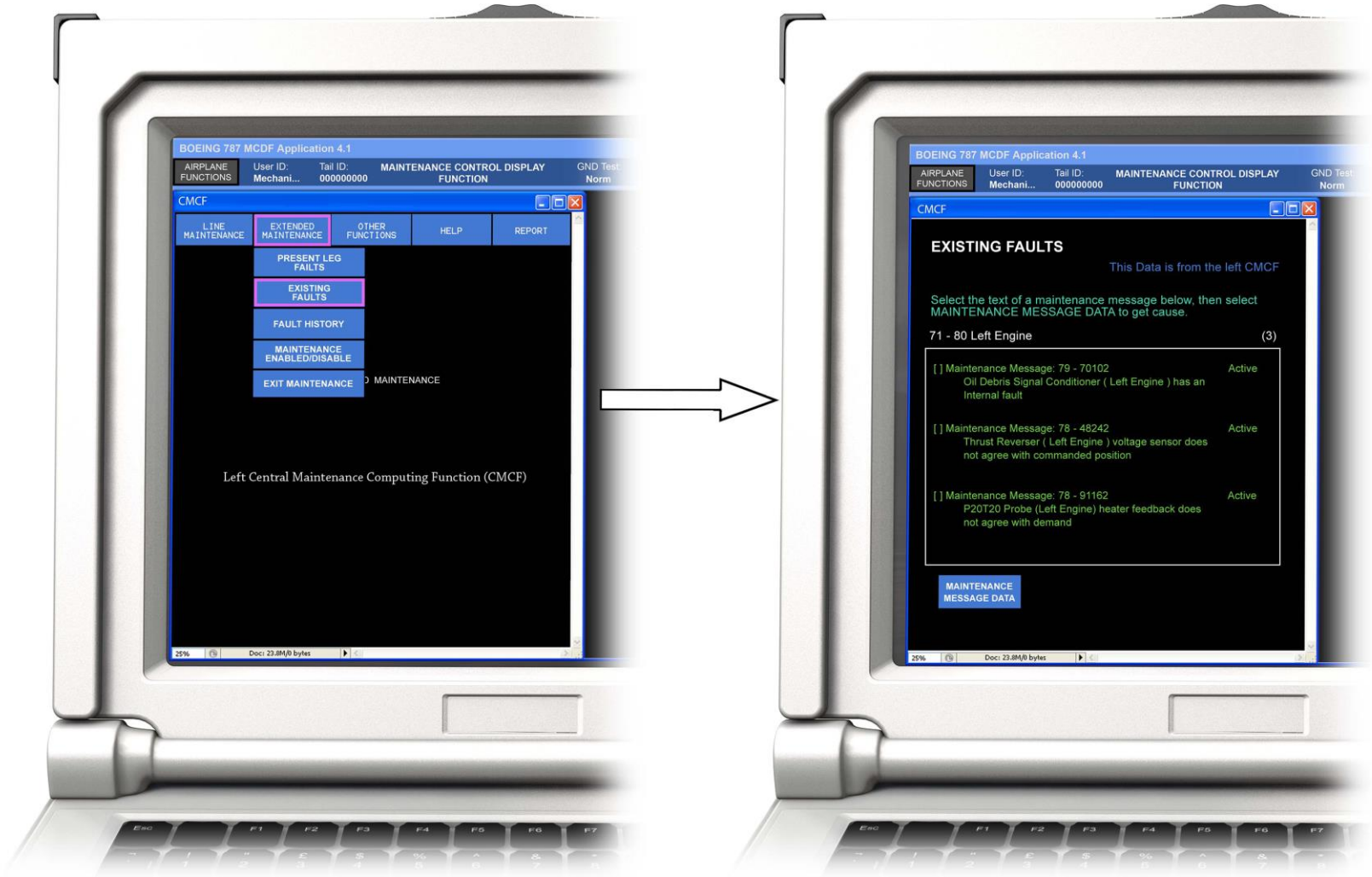

T1000 TEN_LBM_M14_239_01P

EXTENDED MAINTENANCE – EXISTING FAULTS

© Rolls-Royce plc 2018. Use or disclosure is subject to the legend on the Notice to Holder page

Central Maintenance Computing Function (CMCF)

Other Functions Selection

Under the Extended Maintenance menu there more complex functions available to the maintenance crew, such as:

Input Monitoring – This allows the maintenance crew to monitor digital and analogue signals received by the CMCF.

Engine Balancing – Accesses the Onboard Engine Balance System (OEBS) menus. Use the OEBS menus to in-depth engine maintenance and to show engine data stored in memory. Having selected the engine (No1 or 2) then selecting the PERFORM BALANCE it then indicates where to add or remove the balance weights based on the last flight. Selecting CALCULATE SPECIFIC COEFFICIENTS / GROUND RUN permits the EMU to recalculate the balance on the next ground run to give a more accurate result.

PSEU And Air / Ground Rigging – Allows rigging and calibration of the PSEU and Air / Ground Functions.

Special Functions – supplies access to unique functions within certain ATA chapters. Use special functions to set conditions that aid in specific maintenance tasks.

Exit Maintenance – Ends the CMCF session.

© Rolls-Royce plc 2018. Use or disclosure is subject to the legend on the Notice to Holder page

T1000 TEN_LBM_M14_240_01P

OTHER FUNCTIONS – ENGINE BALANCING

© Rolls-Royce plc 2018. Use or disclosure is subject to the legend on the Notice to Holder page

END OF SECTION